Rules and Regulations of the State of Georgia

Department 511 RULES OF GEORGIA DEPARTMENT OF PUBLIC HEALTH

Current through Rules and Regulations filed through April 4, 2023

Table of Contents

ADMINISTRATIVE HISTORY
Chapter 511-1. ADMINISTRATION.
Subject 511-1-1. ORGANIZATION.
Rule 511-1-1-.01. Organization of the Department of Public Health.
Rule 511-1-1-.02. Declaratory Rulings.
Rule 511-1-1-.03. Requesting Information and Documents from the Department of Public Health.
Rule 511-1-1-.04. Petitions to Enact, Amend, or Repeal Rules.
Rule 511-1-1-.05. Petitions for Waiver or Variance From Rules or Regulations.
Subject 511-1-2. SCHEDULE OF FEES FOR LABORATORY SERVICES.
Rule 511-1-2-.01. Fees for Laboratory Services.
Subject 511-1-3. VITAL RECORDS.
Rule 511-1-3-.01. Forms.
Rule 511-1-3-.02. Requirements for Preparation of Certificates.
Rule 511-1-3-.03. Designation of Additional Offices.
Rule 511-1-3-.04. Infants of Unknown Parentage: Foundling Registration.
Rule 511-1-3-.05. Registration of Out of Institution Births.
Rule 511-1-3-.06. Who May Request the Registration of and Sign A Delayed Certificate of Birth.
Rule 511-1-3-.07. Facts to be Established for a Delayed Registration of Birth.
Rule 511-1-3-.08. Child Names on Birth Certificates.
Rule 511-1-3-.09. Documentary Evidence - Requirements for Delayed Registration.

Rule 511-1-3-.10. Documentary Evidence - Acceptability.
Rule 511-1-3-.11. Abstraction of Documentary Evidence.
Rule 511-1-3-.12. Certification by the State Registrar.
Rule 511-1-3-.13. Dismissal After One Year.
Rule 511-1-3-.14. Legitimation by Marriage.
Rule 511-1-3-.15. Determination of Paternity.
Rule 511-1-3-.16. Affidavit of Paternity.
Rule 511-1-3-.17. New Certificate.
Rule 511-1-3-.18. Existing Certificate to be Placed in a Special File.
Rule 511-1-3-.19. Reporting of Deaths.
Rule 511-1-3-.20. [Repealed].
Rule 511-1-3-.21. Disposition of Reports of Induced Terminations of Pregnancy.
Rule 511-1-3-.22. Removal of Body.
Rule 511-1-3-.23. Permits for Disposition, Disinterment and Reinterment.
Rule 511-1-3-.24. Amendment of Minor Errors on Birth, Death, and Spontaneous Fetal Death Certificates During the First Year.
Rule 511-1-3-.25. All Other Amendments.
Rule 511-1-3-.26. Who May Apply to Amend a Vital Record.
Rule 511-1-3-.27. Amendment of Registrants' Given Names on Birth Certificates Within the First Year.
Rule 511-1-3-.28. Medical Items.
Rule 511-1-3-.29. Amendment of the Same Item More than Once.
Rule 511-1-3-.30. Amendment of Date of Birth.
Rule 511-1-3-.31. Methods of Amending Certificates.
Rule 511-1-3-.32. Record Preservation.
Rule 511-1-3-.33. Disclosure of Vital Records and Information.
Rule 511-1-3-.34. Copies of Data from Vital Records.
Rule 511-1-3-.35. Fees for Copies and Searches.
Rule 511-1-3-.36. Funeral Director's Records.
Rule 511-1-3-.37. Matching of Birth and Death Certificates.
Rule 511-1-3-.38. Transmittal of Certificates and Reports.
Rule 511-1-3-.39. Appeals and Hearings.
Rule 511-1-3-.40. Service of Process.
Subject 511-1-4. ADMINISTRATIVE REVIEW PROCEEDINGS.
Rule 511-1-4-.01. Matters Eligible for Administrative Review.
Rule 511-1-4-.02. Designation of Review Officer.
Rule 511-1-4-.03. Procedure.
Rule 511-1-4-.04. Rule Standard of Review.

Chapter 511-2. DISEASE SURVEILLANCE AND CONTROL.
Subject 511-2-1. NOTIFICATION OF DISEASE.
Rule 511-2-1-.01. Definitions.
Rule 511-2-1-.02. Duty to Report Notifiable Diseases and Conditions.
Rule 511-2-1-.03. Confidentiality.
Rule 511-2-1-.04. Liability.
Rule 511-2-1-.05. Reporting of Pediatric Asthma Deaths.
Rule 511-2-1-.06. Reports to the Department of Community Health.
Subject 511-2-2. IMMUNIZATION OF SCHOOL CHILDREN.
Rule 511-2-2-.01. Definitions.
Rule 511-2-2-.02. Immunization Required.
Rule 511-2-2-.03. Official Immunization Schedules.
Rule 511-2-2-.04. Certificate of Immunization.
Rule 511-2-2-.05. Certificate of Immunization Issued for Child with Physical Disability.
Rule 511-2-2-.06. Certificate of Immunization for a Child Immunized Outside of Georgia.
Rule 511-2-2-.07. Religious Objections to Required Immunizations.
Subject 511-2-3. TUBERCULOSIS CONTROL.
Rule 511-2-3-.01. Purpose.
Rule 511-2-3-.02. Reporting.
Rule 511-2-3-.03. Duties and Responsibilities of the County Health Departments.
Rule 511-2-3-.04. Hospitalization of Committed Patients.
Rule 511-2-3-.05. Discharge of Committed Patients.
Rule 511-2-3-.06. Judicial Petitions.
Subject 511-2-4. REPORTING OF VENEREAL DISEASES.
Rule 511-2-4-.01. Definitions.
Rule 511-2-4-.02. Reporting of Venereal Disease.
Subject 511-2-5. ACQUIRED IMMUNODEFICIENCY SYNDROME (AIDS).
Rule 511-2-5-.01. Definitions.
Rule 511-2-5-.02. Preamble.
Rule 511-2-5-.03. Applicability of Chapter.
Rule 511-2-5-.04. Prevention of Perinatal Infection.
Rule 511-2-5-.05. Testing of Individuals Convicted of Prostitution.
Rule 511-2-5-.06. Notification of Test Results.
Rule 511-2-5-.07. Laboratories.
Rule 511-2-5-.08. Ancillary Services.
Rule 511-2-5-.09. Confidentiality.

Rule 511-2-5-.10. Non-anonymous HIV Reporting.
Subject 511-2-6. HANDLING AND DISPOSITION OF HUMAN REMAINS INFECTED WITH A DANGEROUS VIRUS.
Rule 511-2-6-.01. Handling of Infected Human Remains When Death Occurs in a Hospital or Medical Facility.
Rule 511-2-6-.02. Disposition of Infected Human Remains.
Rule 511-2-6-.03. Decontamination of Site of Death.
Rule 511-2-6-.04. Handling of Infected Human Remains When Death Occurs Outside of a Hospital or Medical Facility.
Subject 511-2-7. RABIE CONTROL.
Rule 511-2-7-.01. Rabies Prevention and Control.
Rule 511-2-7-.02. Recommended Enforcement Measures.
Subject 511-2-8. EXPEDITED PARTNER THERAPY (EPT).
Rule 511-2-8-.01. Definitions.
Rule 511-2-8-.02. Expedited partner therapy authorized.
Rule 511-2-8-.03. Prescribing EPT drugs.
Rule 511-2-8-.04. Ordering and dispensing EPT drugs by public health nurses.
Rule 511-2-8-.05. Dispensing EPT drugs.
Rule 511-2-8-.06. Immunity from civil and criminal liability and professional discipline.
Subject 511-2-9. SYRINGE SERVICES PROGRAMS.
Rule 511-2-9-.01. Definitions.
Rule 511-2-9-.02. Registration Required.
Rule 511-2-9-.03. Application for Registration.
Rule 511-2-9-.04. Operating Requirements.
Rule 511-2-9-.05. Policies and Procedures Manual.
Rule 511-2-9-.06. Right of Inspection and Copying.
Rule 511-2-9-.07. Renewal of Registration.
Rule 511-2-9-.08. Granting and Suspension or Revocation of Registration.
Chapter 511-3. ENVIRONMENTAL HEALTH HAZARDS.
Subject 511-3-1. ON-SITE SEWAGE MANAGEMENT SYSTEMS.
Rule 511-3-1-.01. Applicability.
Rule 511-3-1-.02. Definitions.
Rule 511-3-1-.03. General Requirements for On-Site Sewage Management Systems.
Rule 511-3-1-.04. Sewers.
Rule 511-3-1-.05. Septic Tanks.
Rule 511-3-1-.06. Distribution Devices and Dosing Tanks.
Rule 511-3-1-.07. Absorption Fields.
Rule 511-3-1-.08. Privies.

Rule 511-3-1-.09. Alternative On-Site Sewage Management Systems.
Rule 511-3-1-.10. Experimental On-Site Sewage Management Systems.
Rule 511-3-1-.11. Septage Removal and Disposal.
Rule 511-3-1-.12. Grease Traps.
Rule 511-3-1-.13. Sewage Flow.
Rule 511-3-1-.14. Subdivision and Mobile Home Parks.
Rule 511-3-1-.15. Technical Review Committees.
Rule 511-3-1-.16. Certification of Soil Classifiers, Septic Tank Contractors, On-Site Sewage Management System Inspectors, Maintenance Personnel, and Sewage Pumpers.
Rule 511-3-1-.17. Maintenance and Operation.
Rule 511-3-1-.18. Standards for Non-Conventional On-Site Sewage Management Systems.
Rule 511-3-1-.19. Decertification and Denial of Renewal.
Subject 511-3-2. MASS GATHERINGS.
Rule 511-3-2-.01. Definitions.
Rule 511-3-2-.02. General Provisions.
Rule 511-3-2-.03. Facilities, Services and Activities to be Provided and Maintained at Site of Mass Gathering.
Subject 511-3-3. DRINKING WATER SUPPLY.
Rule 511-3-3-.01. Applicability.
Rule 511-3-3-.02. Definitions.
Rule 511-3-3-.03. General Provisions.
Subject 511-3-4. SOLID WASTE.
Rule 511-3-4-.01. Applicability.
Rule 511-3-4-.02. Definitions.
Rule 511-3-4-.03. General Provisions.
Subject 511-3-5. PUBLIC SWIMMING POOLS, SPAS, AND RECREATIONAL WATER PARKS.
Rule 511-3-5-.01. Definitions.
Rule 511-3-5-.02. Scope.
Rule 511-3-5-.03. Permits.
Rule 511-3-5-.04. Structural Design.
Rule 511-3-5-.05. Dimensional Design.
Rule 511-3-5-.06. Decks and Deck Equipment.
Rule 511-3-5-.07. Circulation Systems.
Rule 511-3-5-.08. Filters.
Rule 511-3-5-.09. Pumps and Motors.
Rule 511-3-5-.10. Return Inlets and Suction Outlets.
Rule 511-3-5-.11. Surface Skimmer Systems.

Rule 511-3-5-.12. Lighting and Electrical Requirements.
Rule 511-3-5-.13. Heaters and Temperature Requirements.
Rule 511-3-5-.14. Air Blower and Air Induction Systems.
Rule 511-3-5-.15. Water Supply and Wastewater Disposal.
Rule 511-3-5-.16. Disinfectant Equipment and Chemical Feeders.
Rule 511-3-5-.17. Chemical Operational Parameters.
Rule 511-3-5-.18. Specific Safety Features and Markers.
Rule 511-3-5-.19. Dressing Facilities and Sanitary Facilities.
Rule 511-3-5-.20. Recreational Water Parks and Special Purpose Pools.
Rule 511-3-5-.21. Food Service.
Rule 511-3-5-.22. Operation and Management.
Rule 511-3-5-.23. Compliance Procedures.
Rule 511-3-5-.24. Environmental Health Personnel.
Subject 511-3-6. PORTABLE SANITATION CONTRACTORS.
Rule 511-3-6-.01. Applicability.
Rule 511-3-6-.02. Definitions.
Rule 511-3-6-.03. General Provisions.
Rule 511-3-6-.04. Construction of Portable Sanitation Units.
Rule 511-3-6-.05. Removal and Disposal of Waste from Portable Sanitation Units.
Rule 511-3-6-.06. Certification of Portable Sanitation Contractors and Companies.
Rule 511-3-6-.07. Decertification of Portable Sanitation Contractors and Companies.
Rule 511-3-6-.08. Appendix.
Subject 511-3-7. GEORGIA SMOKEFREE AIR ACT OF 2005.
Rule 511-3-7-.01. Authority.
Rule 511-3-7-.02. Purpose.
Rule 511-3-7-.03. Applicability.
Rule 511-3-7-.04. Definitions.
Rule 511-3-7-.05. Signage.
Rule 511-3-7-.06. Air Handling Systems.
Rule 511-3-7-.07. Hours of Operation.
Rule 511-3-7-.08. Outdoor Smoking Areas.
Rule 511-3-7-.09. Enforcement.
Rule 511-3-7-.10. Penalties.
Subject 511-3-8. BODY ART.
Rule 511-3-8-.01. Authority.
Rule 511-3-8-.02. Purpose.
Rule 511-3-8-.03. Applicability.
Rule 511-3-8-.04. Definitions.

Rule 511-3-8-.05. Permits.
Rule 511-3-8-.06. Employee Files.
Rule 511-3-8-.07. Body Artist Certification and Decertification.
Rule 511-3-8-.08. Client Files.
Rule 511-3-8-.09. Minimum Design Standards.
Rule 511-3-8-.10. Furnishings and Fixtures.
Rule 511-3-8-.11. Supplies.
Rule 511-3-8-.12. Health and Hygiene.
Rule 511-3-8-.13. Instrument Cleaning and Sterilization.
Rule 511-3-8-.14. Dyes and Pigments.
Rule 511-3-8-.15. Tattoo Procedures.
Rule 511-3-8-.16. Piercing Jewelry.
Rule 511-3-8-.17. Body Piercing Procedures.
Rule 511-3-8-.18. Body Art After Care.
Rule 511-3-8-.19. Disinfection of Workplace.
Rule 511-3-8-.20. Disposal of Biomedical Waste.
Rule 511-3-8-.21. Signage.
Rule 511-3-8-.22. Inspections.
Rule 511-3-8-.23. Compliance and Enforcement.
Rule 511-3-8-.24. Fees.
Chapter 511-4. ANIMALS AND INSECTS.
Subject 511-4-1. [Repealed].
Rule 511-4-1-.01. [Repealed].
Rule 511-4-1-.02. [Repealed].
Rule 511-4-1-.03. [Repealed].
Rule 511-4-1-.04. [Repealed].
Rule 511-4-1-.05. [Repealed].
Rule 511-4-1-.06. [Repealed].
Rule 511-4-1-.07. [Repealed].
Rule 511-4-1-.08. [Repealed].
Rule 511-4-1-.09. [Repealed].
Rule 511-4-1-.10. [Repealed].
Subject 511-4-2. [Repealed].
Rule 511-4-2-.01. [Repealed].
Rule 511-4-2-.02. [Repealed].
Rule 511-4-2-.03. [Repealed].
Subject 511-4-3. REPEALED.
Rule 511-4-3-.01. Repealed.

Rule 511-4-3-.02. Repealed.
Rule 511-4-3-.03. Repealed.
Rule 511-4-3-.04. Repealed.
Rule 511-4-3-.05. Repealed.
Chapter 511-5. HEALTH PROMOTION.
Subject 511-5-1. MIDWIFERY.
Rule 511-5-1-.01. Definitions.
Rule 511-5-1-.02. Authority to Practice as a Midwife.
Rule 511-5-1-.03. [Repealed].
Rule 511-5-1-.04. [Repealed].
Rule 511-5-1-.05. [Repealed].
Subject 511-5-2. THE FLUORIDATION OF PUBLIC WATER SUPPLIES.
Rule 511-5-2-.01. Fluoridation.
Subject 511-5-3. PROPHYLACTIC TREATMENT OF THE EYES OF THE NEWBORN.
Rule 511-5-3-.01. Purpose.
Rule 511-5-3-.02. Definitions.
Rule 511-5-3-.03. Provisions.
Subject 511-5-4. SEROLOGIC TESTS FOR PREGNANT WOMEN.
Rule 511-5-4-.01. Purpose.
Rule 511-5-4-.02. Definitions.
Rule 511-5-4-.03. Provisions.
Subject 511-5-5. TESTING FOR INHERITED DISORDERS IN THE NEWBORN.
Rule 511-5-5-.01. Purpose.
Rule 511-5-5-.02. Definitions.
Rule 511-5-5-.03. Testing Required of Newborn Babies.
Rule 511-5-5-.04. Newborn Screening Specimen Cards and Laboratory Analysis.
Rule 511-5-5-.05. Critical Congenital Heart Disease Screening.
Rule 511-5-5-.06. Hearing Screening.
Rule 511-5-5-.07. Approved Laboratories.
Rule 511-5-5-.08. Abnormal Test Results.
Rule 511-5-5-.09. Reporting.
Rule 511-5-5-.10. Revisions to Newborn Screening Panel.
Subject 511-5-6. VISION, HEARING, DENTAL, AND NUTRITION SCREENING OF CHILDREN ENTERING PUBLIC SCHOOLS.
Rule 511-5-6-.01. Definitions.
Rule 511-5-6-.02. Filing of Certificates.
Rule 511-5-6-.03. Screenings Required for Children Entering School.

Rule 511-5-6-.04. Persons Authorized to Conduct Screenings.
Rule 511-5-6-.05. Certificate for Child with a Disability or Health Condition that Precludes Taking or Passing a Screening.
Rule 511-5-6-.06. Certificate for Child Exempt from Screenings.
Rule 511-5-6-.07. Certificate for Child Screened Outside of Georgia.
Rule 511-5-6-.08. Department of Public Health Form 3300.
Form (511-5-6) Georgia Department of Public Health Form 3300
Subject 511-5-7. REPORTS OF INDUCED TERMINATION OF PREGNANCY.
Rule 511-5-7-.01. Reporting Induced Termination of Pregnancy.
Subject 511-5-8. SCREENING OF PUBLIC SCHOOL CHILDREN FOR SCOLIOSIS.
Rule 511-5-8-.01. Definitions.
Rule 511-5-8-.02. Provision for Screening.
Rule 511-5-8-.03. Written Notice.
Rule 511-5-8-.04. Screening Examinations.
Rule 511-5-8-.05. Screening Process.
Rule 511-5-8-.06. Records and Reports.
Subject 511-5-9. SHARPS INJURY PREVENTION.
Rule 511-5-9-.01. Purpose.
Rule 511-5-9-.02. Scope and Application.
Rule 511-5-9-.03. Definitions.
Rule 511-5-9-.04. Evaluation Committee.
Rule 511-5-9-.05. Exposure Control Plan.
Rule 511-5-9-.06. Engineering and Work Practice Controls.
Rule 511-5-9-.07. Sharps Injury Log.
Rule 511-5-9-.08. Availability of List.
Rule 511-5-9-.09. Additional Considerations.
Subject 511-5-10. CANCER STATE AID PROGRAM.
Rule 511-5-10-.01. Criteria for Certification as Cancer Treatment Facility.
Rule 511-5-10-.02. Cancer State Aid Program Patient Enrollment.
Rule 511-5-10-.03. Eligibility Requirements for Cancer State Aid Patients.
Rule 511-5-10-.04. Health Insurance.
Rule 511-5-10-.05. Periodic review of eligibility.
Rule 511-5-10-.06. Application Termination.
Rule 511-5-10-.07. Reimbursement of Cost.
Rule 511-5-10-.08. Refunds of reimbursements for ineligible patients.
Rule 511-5-10-.09. Reconsideration of eligibility and claims decisions.
Subject 511-5-11. LOW THC OIL PATIENT REGISTRY.
Rule 511-5-11-.01. Definitions.

Rule 511-5-11-.02. Low THC Oil Patient Registry.
Rule 511-5-11-.03. Applications for the Low THC Oil Patient Registry.
Rule 511-5-11-.04. Issuance of Low THC Oil Permits.
Subject 511-5-12. DONATED DRUG REPOSITORY PROGRAM.
Rule 511-5-12-.01. Definitions.
Rule 511-5-12-.02. Authority and waivers.
Rule 511-5-12-.03. Eligible drugs.
Rule 511-5-12-.04. Eligible recipients.
Rule 511-5-12-.05. Receipt, storage, and handling of donated drugs by an eligible recipient.
Rule 511-5-12-.06. Dispensing and distribution of donated drugs.
Rule 511-5-12-.07. Handling fees.
Subject 511-5-13. DESIGNATION OF PERINATAL CENTERS.
Rule 511-5-13-.01. Scope and Purpose.
Rule 511-5-13-.02. Definitions.
Rule 511-5-13-.03. Designation.
Rule 511-5-13-.04. Designation Criteria for Maternal Centers.
Rule 511-5-13-.05. Designation Criteria for Neonatal Centers.
Rule 511-5-13-.06. Confidentiality.
Chapter 511-6. FOOD AND LODGING ESTABLISHMENTS.
Subject 511-6-1. FOOD SERVICE.
Rule 511-6-1-.01. Definitions.
Rule 511-6-1-.02. Provisions.
Rule 511-6-1-.03. Management and Personnel.
Rule 511-6-1-.04. Food.
Rule 511-6-1-.05. Equipment and Utensils.
Rule 511-6-1-.06. Sanitary Facilities and Controls.
Rule 511-6-1-.07. Physical Facilities.
Rule 511-6-1-.08. Special Food Service Operations.
Rule 511-6-1-.09. Certification and Standardization of Environmental Health Personnel.
Rule 511-6-1-.10. Inspections and Compliance Procedures.
Subject 511-6-2. TOURIST ACCOMMODATIONS.
Rule 511-6-2-.01. Legal Authority.
Rule 511-6-2-.02. Title and Purpose.
Rule 511-6-2-.03. Definitions.
Rule 511-6-2-.04. Tourist Accommodation Permits.
Rule 511-6-2-.05. Inspections.

Rule 511-6-2-.06. Employee Health and Safety.
Rule 511-6-2-.07. Water Supply and Sanitizing.
Rule 511-6-2-.08. Toilet Facilities.
Rule 511-6-2-.09. Sewers.
Rule 511-6-2-.10. Sewage Disposal.
Rule 511-6-2-.11. Plumbing.
Rule 511-6-2-.12. Garbage and Refuse Disposal.
Rule 511-6-2-.13. Insect and Rodent Control.
Rule 511-6-2-.14. Construction, Layout and Furnishings.
Rule 511-6-2-.15. Heating and Fire Safety.
Rule 511-6-2-.16. Swimming Pools.
Rule 511-6-2-.17. Laundry Facilities.
Rule 511-6-2-.18. Grounds.
Rule 511-6-2-.19. Food Service Options.
Rule 511-6-2-.20. Compliance Procedures.
Rule 511-6-2-.21. Environmental Health Personnel.
Rule 511-6-2-.22. Fees.
Rule 511-6-2-.23. Effective Date.
Chapter 511-7. VOLUNTEER PROGRAMS.
Subject 511-7-1. GEORGIA VOLUNTEER HEALTH PROGRAM.
Rule 511-7-1-.01. Definitions.
Rule 511-7-1-.02. Administration of the Program.
Rule 511-7-1-.03. Health Care Provider Eligibility.
Rule 511-7-1-.04. Volunteers.
Rule 511-7-1-.05. Patient Selection and Referral.
Rule 511-7-1-.06. Eligibility.
Rule 511-7-1-.07. Covered Services.
Rule 511-7-1-.08. Contracts.
Rule 511-7-1-.09. Notice Requirements.
Rule 511-7-1-.10. Patient Records.
Rule 511-7-1-.11. Sovereign Immunity.
Rule 511-7-1-.12. Legal Actions.
Rule 511-7-1-.13. Complaints.
Rule 511-7-1-.14. Department Reports.
Subject 511-7-2. PRESCRIPTION DRUG MONITORING PROGRAM.
Rule 511-7-2-.01. Definitions.
Rule 511-7-2-.02. Internet access to the Prescription Drug Monitoring Program database (PDMP).

Rule 511-7-2-.03. Obligation of dispensers to transmit prescription information to the PDMP.
Rule 511-7-2-.04. Delegates.
Rule 511-7-2-.05. Dispenser claims for hardship waiver.
Rule 511-7-2-.06. Duty of prescribers and dispensers to safeguard information obtained from the PDMP.
Rule 511-7-2-.07. Requests for prescription data held in the PDMP.
Rule 511-7-2-.08. De-identification of prescription information held in the PDMP for more than two years.
Chapter 511-8. SPECIAL SUPPLEMENTAL NUTRITIONAL PROGRAM FOR WOMEN, INFANTS, AND CHILDREN (WIC).
Subject 511-8-1. The Special Supplemental Nutrition Program for Women, Infants and Children (WIC).
Rule 511-8-1-.01. Legal Authority.
Rule 511-8-1-.02. Title and Purpose.
Rule 511-8-1-.03. Definitions.
Rule 511-8-1-.04. Purpose and Administration.
Rule 511-8-1-.05. Vendor and Farmer Terms and Conditions.
Rule 511-8-1-.06. Procedures for Vendor and Farmer Administrative Review, Hearings and Appeals.
Chapter 511-9. EMERGENCY PREPAREDNESS.
Subject 511-9-1. ISOLATION AND QUARANTINE.
Rule 511-9-1-.01. Scope and Purpose.
Rule 511-9-1-.02. Definitions.
Rule 511-9-1-.03. Public Health Control Measures.
Rule 511-9-1-.04. Powers of the County Boards of Health to Implement Public Health Control Measures.
Rule 511-9-1-.05. Procedures for Implementing Isolation and Quarantine.
Subject 511-9-2. EMERGENCY MEDICAL SERVICES.
Rule 511-9-2-.01. Purpose.
Rule 511-9-2-.02. Definitions.
Rule 511-9-2-.03. Statewide Emergency Medical Services Advisory Councils.
Rule 511-9-2-.04. Regional Emergency Medical Services Advisory Councils.
Rule 511-9-2-.05. Designation of Specialty Care Centers.
Rule 511-9-2-.06. Licensure of Air Ambulance Services.
Rule 511-9-2-.07. Licensure of Ground Ambulance Services.
Rule 511-9-2-.08. Licensure of Neonatal Transport Services.
Rule 511-9-2-.09. Licensure of Medical First Responder Services.
Rule 511-9-2-.10. Procurement, Control, Handling, and Accountability of Pharmaceuticals.

Rule 511-9-2-.11. Inspections of EMS Agencies.
Rule 511-9-2-.12. Licensure of Emergency Medical Services Personnel.
Rule 511-9-2-.13. Licensure Renewal for Emergency Medical Services Personnel.
Rule 511-9-2-.14. Mandatory Reporting Requirements for EMS Agencies and Medics.
Rule 511-9-2-.15. General Provisions for Emergency Medical Services Personnel, EMS Instructors, and EMS Instructor/Coordinators.
Rule 511-9-2-.16. Standards for Emergency Medical Services Education.
Rule 511-9-2-.17. Standards for Emergency Medical Service Instructors and Instructor/Coordinators.
Rule 511-9-2-.18. Standards of Conduct for Licensees.
Rule 511-9-2-.19. Disciplinary Actions Against Licensees.

ADMINISTRATIVE HISTORY

The **Administrative History** following each Rule gives the date on which the Rule was originally filed and its effective date, as well as the date on which any amendment or repeal was filed and its effective date. Principal abbreviations used in the Administrative History are as follows:

f. - filed

eff. - effective

R. - Rule (Abbreviated only at the beginning of the control number)

Ch. - Chapter (Abbreviated only at the beginning of the control number)

ER. - Emergency Rule

Rev. - Revised

Note: Emergency Rules are listed in each Rule's Administrative History by Emergency Rule number, date filed and effective date. The Emergency Rule will be in effect for 120 days or until the effective date of a permanent Rule covering the same subject matter superseding this Emergency Rule is adopted, as specified by the Agency.

Chapter 511-9-2 entitled "Emergency Medical Services" adopted. F. Dec. 14, 2011; eff. Jan. 3, 2012 (previously Chapter 111-9-2).

Chapter 511-8-1 entitled The Special Supplemental Nutrition Program for Women, Infants and Children (WIC) adopted. F. Jan. 4, 2012; eff. Jan. 24, 2012.

Chapter 511-5 entitled "Health Promotion and Disease Prevention Program" adopted. F. Apr. 11, 2012; May 1, 2012.

Chapter 511-1-1 entitled "Organization" adopted. F. Jun. 7, 2012; eff. Jun. 26, 2012.

Chapter 511-5-7 entitled "Reports of Induced Termination of Pregnancy" and rule 511-5-7-.01 adopted. F. Dec. 18, 2012; eff. Jan. 7, 2013.

Chapter 511-5-6 entitled "Vision, Hearing, Dental, and Nutrition Screening of Children Entering Public Schools" adopted. F. May 22, 2013; eff. June 11, 2013.

Chapter 511-1-2 entitled "Schedule of Fees for Laboratory Services" adopted. F. July 1, 2013; eff. July 21, 2013.

Chapter 511-6-2 entitled "Tourist Accommodations" adopted. F. July 16, 2013; eff. Jan. 1, 2014, as specified by the Agency.

Chapters 511-1-3 entitled "Vital Records," 511-2-2 entitled "Immunization of Children as a Prerequisite to Admission to School and Other Facilities," 511-2-3 entitled "Tuberculosis Control," 511-2-4 entitled "Reporting of Venereal Diseases," 511-3-2 entitled "Mass Gatherings," 511-3-7 entitled "Georgia Smokefree Air Act of 2005," 511-3-8 entitled "Land Disposal of Domestic Septage," 511-4-1 entitled "Importation, Purchase, Breeding, Giving Away, Sale or Offer of Sale of Birds of the Psittacine Family," 511-4-2 entitled "Control of Rabies," 511-4-3 entitled "Mosquito Control Measures on Impounded Waters," 511-5-1 entitled "Midwifery" 511-5-2 entitled "The Fluoridation of Public Water Supplies," 511-5-3 entitled "Prophylactic Treatment of the Eyes of the Newborn," 511-5-4 entitled "Serologic Test for Syphilis for Pregnant Women," 511-5-5 entitled "Testing for Inherited Disorders in the Newborn," and 511-7-1 entitled "Georgia Volunteer Health Program" adopted. F. Sep. 20, 2013; eff. Oct. 10, 2013.

Chapter 511-2-1 entitled "Notification of Disease" adopted. F. Sep. 23, 2013; eff. Oct. 13, 2013.

Chapters 511-2-5 entitled "Acquired Immunodeficiency Syndrome (AIDS)," 511-3-3 entitled "Drinking Water Supply," 511-3-4 entitled "Solid Waste," 511-3-5 entitled "Swimming Pools and Recreational Water Parks" and 511-5-8 entitled "Screening of Public School Children for Scoliosis" adopted. F. Oct. 15, 2013; eff. Nov. 4, 2013.

Chapter 511-3-6 entitled "Portable Sanitation Contractors" adopted. F. Oct. 16, 2013; eff. Nov. 5, 2013.

Chapter 511-5-9 entitled "Sharps Injury Prevention" adopted. F. Oct. 18, 2013; eff. Nov. 7, 2013.

Chapter 511-3-1 entitled "On-Site Sewage Management Systems" adopted. F. Dec. 20, 2013; eff. Jan. 9, 2014.

Chapter 511-2-2 entitled "Immunization of Children as a Prerequisite to Admission to School and Other Facilities" repealed, new chapter entitled "Immunization of School Children" adopted. F. Apr. 15, 2014; eff. May 5, 2014.

Chapter 511-5-5 entitled "Testing for Inherited Disorders in the Newborn" repealed, new chapter entitled "Georgia Newborn Screening Program" adopted. F. May 13, 2014; eff. June 2, 2014.

Rule 511-1-3-.08 repealed and new rule adopted. F. May 27, 2014; eff. June 16, 2014.

Chapter 511-3-8 entitled "Land Disposal of Domestic Septage" repealed. F. June 20, 2014; eff. July 10, 2014.

Rules 511-9-2-.04 and .16 amended. F. Apr. 2, 2015; eff. Apr. 22, 2015.

Rule 511-2-1-.05 adopted. Rule 511-2-2-.07 amended. F. May 27, 2015; eff. June 16, 2015.

Chapter 511-5-11 entitled "Low THC Oil Patient Registry" adopted. F. July 24, 2015; eff. Aug. 13, 2015.

Rule 511-2-1-.05 amended. F. Oct. 2, 2015; eff. Oct. 22, 2015.

Chapter 511-6-1 entitled "Food Service" adopted. F. Oct. 9, 2015; eff. Oct. 29, 2015.

Chapter 511-4-3 entitled "Mosquito Control Measures on Impounded Waters" repealed. F. Oct. 20, 2015; eff. Nov. 9, 2015.

Chapter 511-5-1 entitled "Midwifery" repealed, new Chapter of the same title adopted. F. Nov. 13, 2015; eff. Dec. 3, 2015.

Rule 511-3-1-.11 amended. Rule 511-3-1-.19 adopted. F. Dec. 7, 2015; eff. Dec. 27, 2015.

Chapter 511-9-1 entitled "Isolation and Quarantine" adopted. F. Feb. 2, 2016; eff. Feb. 22, 2016.

Chapter 511-2-6 entitled "Handling and Disposition of Human Remains Infected with a Dangerous Virus" adopted. F. Feb. 16, 2016; eff. Mar. 7, 2016.

Rules 511-1-3-.38 and .39 amended. F. Mar. 2, 2016; eff. Mar. 22, 2016.

Rules 511-9-2-.04 and .10 non-substantive error correction. Effective May 17, 2016.

Rules 511-9-2-.02, .03, .06 thru .09, .11 thru .13, .16 thru .19 amended. Rule 511-9-2-.14 repealed. F. Apr. 27, 2016; eff. May 17, 2016.

Rule 511-5-5-.04 amended. F. May 12, 2016; eff. June 1, 2016.

Chapter 511-1-4 entitled "Administrative Review Proceedings" adopted. F. Sep. 1, 2016; eff. Sep. 21, 2016.

Emergency Rule Chapter 511-5-12-0.1 entitled "Donated Drug Repository Program" adopted. F. Jan. 3, 2017; eff. Jan. 1, 2017. This emergency rule chapter shall remain in effect until March 29, 2017, as specified by the Agency.

Chapter 511-3-5 entitled "Swimming Pools and Recreational Water Park" repealed, new chapter entitled "Public Swimming Pools, Spas, and Recreational Water Parks" adopted. F. Jan. 11, 2017; eff. Jan. 31, 2017.

Rule 511-1-1-.05 adopted. F. Feb. 2, 2017; eff. Feb. 22, 2017.

Rule 511-9-2-.04 amended. F. May 19, 2017; eff. June 8, 2017.

Chapter 511-7-2 entitled "Prescription Drug Monitoring Program" adopted. F. Oct. 6, 2017; eff. Oct. 26, 2017.

Rules 511-1-3-.19, .21, .23, .25, .26, .38 amended. Rule 511-1-3-.20 repealed. F. Oct. 25, 2017; eff. Nov. 14, 2017.

Rules 511-2-1-.01 thru .04 amended. F. Oct. 27, 2017; eff. Nov. 16, 2017.

Chapter 511-4-1 entitled "Importation, Purchase, Breeding, Giving Away, Sale or Offer of Sale of Birds of the Psittacine Family" repealed. F. Nov. 8, 2017; eff. Nov. 28, 2017.

Chapter 511-2-7 entitled "Rabies Control" adopted. Chapter 511-4-2 entitled "Control of Rabies" repealed. F. Jan. 22, 2018; eff. Feb. 11, 2018.

Rule 511-9-2-.04 amended. F. Jan. 24, 2018; eff. Feb. 13, 2018.

Chapter 511-2-8 entitled "Expedited Partner Therapy (EPT)" adopted. F. Apr. 18, 2018; eff. May 8, 2018.

Rule 511-9-2-.07 amended. F. Apr. 24, 2018; eff. May 14, 2018.

Rules 511-7-2-.04, .07 amended. F. June 19, 2018; eff. July 9, 2018.

Rule 511-9-2-.04 amended. F. June 22, 2018; eff. July 12, 2018.

Rules 511-6-1-.01, .08 amended. F. July 24, 2018; eff. Aug. 13, 2018.

Rules 511-6-1-.01, .08 amended. F. Oct. 1, 2018; eff. Oct. 21, 2018.

Rule 511-1-3-.33 amended. F. Oct. 19, 2018; eff. Nov. 11, 2018, as specified by the Agency.

Rules 511-8-1-.03, .05, .06 amended. F. Oct. 30, 2018; eff. Nov. 11, 2018, as specified by the Agency.

Rules 511-2-1-.01, .03, .05 amended. Rule 511-2-1-.06 adopted. F. Mar. 20, 2019; eff. Apr. 19, 2019, as specified by the Agency.

Note: Rules 511-2-2-.01 through .07, correction of non-substantive typographical error in title in History on SOS Rules and Regulations website, errors discovered May 2019. Effective June 12, 2019.

Rules 511-2-2-.02, .07 amended. F. May 13, 2019; eff. June 12, 2019, as specified by the Agency.

Rules 511-5-5-.03, .04, .07 amended. F. June 14, 2019; eff. July 15, 2019, as specified by the Agency.

Rules 511-1-3-.19, .23, .33, .34 amended. F. Sep. 6, 2019; eff. Oct. 7, 2019, as specified by the Agency.

Rule 511-9-2-.04 repealed and number reserved. Rule 511-9-2-.05 adopted. F. Sep. 16, 2019; eff. Oct. 16, 2019, as specified by the Agency.

Subject 511-5-13 entitled "Designation of Perinatal Centers" adopted. F. Oct. 22, 2019; eff. Nov. 14, 2019, as specified by the Agency.

Rules 511-9-2-.02, .03 amended. Rule 511-9-2-.04 adopted. F. Nov. 14, 2019; eff. Dec. 9, 2019, as specified by the Agency.

ER. 511-9-2-0.2-.20 adopted. F. Mar. 26, 2020; eff. Mar. 26, 2020, this rule to remain in effect for a period of 120 days or until the adoption of a permanent rule covering the same subject matter superseding this Emergency Rule, as specified by the Agency.

Rule 511-2-2-.02 amended. F. June 3, 2020; eff. June 21, 2020, as specified by the Agency.

Subject 511-2-9 entitled "Syringe Services Programs" adopted. F. July 27, 2020; eff. Aug. 16, 2020.

ER. 511-9-2-0.2-.20 repealed. F. Aug. 26, 2020; eff. Aug. 26, 2020.

ER. 511-9-2-0.3-.20 adopted. F. Aug. 26, 2020; eff. Aug. 26, 2020, this rule to remain in effect for a period of 120 days after the end of the COVID-19 public health emergency, as specified by the Agency.

Rule 511-5-5-.04 amended. F. Sep. 23, 2020; eff. Oct. 21, 2020, as specified by the Agency.

Rules 511-6-1-.01, .08 amended. F. Sep. 25, 2020; eff. Oct. 16, 2020, as specified by the Agency.

Rules 511-9-2-.02, .16, .17, .18 amended. F. Oct. 20, 2020; eff. Nov. 18, 2020, as specified by the Agency.

Rule 511-1-3-.23 amended. F. May 24, 2021; eff. June 23, 2021, as specified by the Agency.

Rules 511-9-2-.01, .02, .06 through .09, .11 through .13, .15, .17 through .19 amended; Rule 511-9-2-.14 adopted. F. Sep. 29, 2021; eff. Oct. 27, 2021, as specified by the Agency.

ER. 511-9-2-0.4-.07 adopted. F. Oct. 27, 2021; eff. Oct. 29, 2021, this rule to remain in effect until December 17, 2021, as specified by the Agency.

Rules 511-5-5-.02, .03, .07, .09 amended. F. Nov. 29, 2021; eff. Dec. 29, 2021, as specified by the Agency.

ER. 511-9-2-0.5-.12 adopted. F. Jan. 27, 2022; eff. Jan. 28, 2022, this rule to remain in effect until May 27, 2022, as specified by the Agency.

Rule 511-2-9-.08 amended. F. Apr. 20, 2022; eff. May 18, 2022, as specified by the Agency.

Rules 511-5-13-.02, .04, .05 amended. F. June 16, 2022; eff. July 16, 2022, as specified by the Agency.

Rules 511-5-8-.02, .05 amended. F. July 19, 2022; eff. Aug. 18, 2022, as specified by the Agency.

Subject 511-5-4 amended. Subject 511-5-4 title changed from "Serologic Test for Syphilis for Pregnant Women" to "Serologic Tests for Pregnant Women." F. Aug. 1, 2022; eff. Aug. 31, 2022, as specified by the Agency.

Rules 511-2-8-.01, .02 amended. F. Aug. 22, 2022; eff. Sep. 21, 2022, as specified by the Agency.

Rule 511-5-8-.02 amended. F. Nov. 2, 2022; eff. Dec. 2, 2022, as specified by the Agency.

Rules 511-6-1-.01, .02, .03, .04, .06, .08, .10 amended. F. Jan. 25, 2023; eff. Feb. 24, 2023, as specified by the Agency.

Subject 511-3-8 entitled "Body Art" adopted. F. Mar. 8, 2023; eff. Apr. 6, 2023, as specified by the Agency.

Chapter 511-1. ADMINISTRATION.

Subject 511-1-1. ORGANIZATION.

Rule 511-1-1-.01. Organization of the Department of Public Health.

(a) The Department of Public Health is created by the authority of Code Section 31-2A-1*et seq.* to safeguard and promote the health of the people of Georgia.

(b) The Commissioner of Public Health is appointed by the Governor to serve as the chief administrative officer of the Department, with the duty to supervise, direct, account for, organize, plan, administer, and execute the functions vested in the Department.

(c) The Department has the following divisions: Health Promotion, Health Protection, Finance, Inspector General, General Counsel, Information, Communications, Operations, and District and County Operations. The Department shall have such additional divisions as the Commissioner may find necessary for its effective operation.

Cite as Ga. Comp. R. & Regs. R. 511-1-1-.01
Authority: O.C.G.A. Sections 31-2A-2, -4, -6; 50-13-3.
History. Original Rule entitled "Organization of the Department of Public Health" adopted. F. Jun. 7, 2012; eff. Jun. 26, 2012.

Rule 511-1-1-.02. Declaratory Rulings.

(a) A person whose legal rights are affected by the rules of the Department may petition the Department for a declaratory ruling on the applicability of its rules.

(b) Declaratory rulings shall not be made upon untrue, moot, contingent, or hypothetical facts or situations, but only upon actual facts.

(c) The petition must be verified under oath, and must set forth all pertinent facts and evidence necessary to make a ruling, the name and address of the petitioner, a statement of the petitioner's interest in the ruling sought, and any legal authorities relevant to the ruling. The petition shall be sent by certified mail, return receipt requested, addressed to Office of the General Counsel, Georgia Department of Public Health, 15th Floor, 2 Peachtree Street NW, Atlanta GA 30303.

(d) The Department shall dispose of a request for declaratory ruling as soon as Practicable. If it is determined that the requisites for a declaratory ruling are not present, shall issue a written explanation for such determination.

Cite as Ga. Comp. R. & Regs. R. 511-1-1-.02
Authority: O.C.G.A. Sections 31-2A-6, 50-13-11.

History. Original Rule entitled "Declaratory Rulings" adopted. F. Jun. 7, 2012; eff. Jun. 26, 2012.

Rule 511-1-1-.03. Requesting Information and Documents from the Department of Public Health.

(a) The public may obtain information regarding these rules, or make submissions or requests by contacting the Office of General Counsel, Georgia Department of Public Health, 2 Peachtree Street NW, Atlanta GA 30303.

(b) Requests for documents pursuant to the Open Records Act, O.C.G.A. § 50-18-70*et seq.*, must be addressed to the Open Records Officer, Office of General Counsel, Georgia Department of Public Health, 15th Floor, 2 Peachtree Street NW, Atlanta GA 30303, or sent by facsimile to 404.657.2715, or by email to the Open Records Act email address listed on the Department's website.

Cite as Ga. Comp. R. & Regs. R. 511-1-1-.03
Authority: O.C.G.A. Sections 31-2A-6, 50-13-3, 50-18-71(b).
History. Original Rule entitled "Requesting Information and Documents from the Department of Public Health" adopted. F. Jun. 7, 2012; eff. Jun. 26, 2012.

Rule 511-1-1-.04. Petitions to Enact, Amend, or Repeal Rules.

(a) A person whose legal rights are affected by the rules of the Department may petition the Department to enact, amend, or repeal any rule pertaining to its powers under Chapter 31 or any other Code Section.

(b) The petition must set forth the proposed new regulation or amendment, or identify the rule for which repeal is sought, and the reasons for the request. In addition, the petition must include the petitioner's name and address, and a statement of their interest in the matter. The petition shall be sent by certified mail, return receipt requested, addressed to Office of General Counsel, Georgia Department of Public Health, 15th Floor, 2 Peachtree Street NW, Atlanta GA 30303.

(c) Within thirty days after receiving the petition, the Department shall either deny the petition in writing, stating the reasons for the denial, or shall initiate rulemaking proceedings in accordance with O.C.G.A. § 50-13-4.

Cite as Ga. Comp. R. & Regs. R. 511-1-1-.04
Authority: O.C.G.A. Sections 31-2A-6, 50-13-9.
History. Original Rule entitled "Petitions to Enact, Amend, or Repeal Rules" adopted. F. Jun. 7, 2012; eff. Jun. 26, 2012.

Rule 511-1-1-.05. Petitions for Waiver or Variance From Rules or Regulations.

(1) A person who is subject to a rule or regulation of the Department may petition for a waiver or variance from the requirements of that rule of regulation. The petition shall be addressed to the Georgia Department of Public Health, Office of General Counsel, and shall specify the following:

(a) The rule or regulation from which a waiver or variance is sought;

(b) The type of action requested;

(c) The specific facts showing that compliance with the rule or regulation will cause the petitioner to endure a significant, unique, and demonstrable economic, technological, legal, or other type of hardship which impairs the petitioner's ability to function in the regulated practice or business;

(d) A statement of alternative standards which the petitioner is willing to meet;

(e) A statement of why those alternative standards will afford adequate protection for the public health, safety, and welfare; and

(f) The reason why the requested waiver or variance would serve the purpose of the statutes on which the rule or regulation is based.

(2) The Department shall not grant a waiver or variance:

(a) To a statute, except as authorized by Code Section 31-8-304(b);

(b) To the rules or regulations of another state agency;

(c) To the rules or regulations of a county board of health;

(d) To a rule or regulation adopted or promulgated in order to implement a federally delegated program; or

(e) If the grant of a waiver or variance would be harmful to the public health, safety, or welfare.

(3) The Department shall rule on the petition no earlier than fifteen days after it is posted on the Department's website and no more than sixty days after it was received. The ruling shall be in writing and shall contain a statement of the relevant facts and the reasons supporting the agency's decision.

Cite as Ga. Comp. R. & Regs. R. 511-1-1-.05
Authority: §§ 31-2A-6, 50-13-9.1.
History. Original Rule entitled "Petitions for Waiver or Variance From Rules or Regulations" adopted. F. Feb. 2,

2017; eff. Feb. 22, 2017.

Subject 511-1-2. SCHEDULE OF FEES FOR LABORATORY SERVICES.

Rule 511-1-2-.01. Fees for Laboratory Services.

(1) The Department shall charge a fee for laboratory services according to the schedule in the attached Table.

(2) The fees in the attached Table may be changed by direction of the Commissioner of Public Health as necessary to ensure that the fee reflects the actual cost to the Department, both direct and indirect, of providing the laboratory service. Tests listed in the Table may be discontinued or replaced by direction of the Commissioner of Public Health as may become necessary due to changes in technology, demand for services, or fiscal constraints.

(3) The individual who requests the laboratory services, or for whom the laboratory services are performed, shall be responsible for payment.

Click here to view Table

Cite as Ga. Comp. R. & Regs. R. 511-1-2-.01
Authority: O.C.G.A. Sections 31-2A-4(12), 31-2A-6.
History. Original Rule entitled "Fees for Laboratory Services" adopted. F. Jul. 1, 2013; eff. July 21, 2013.

Subject 511-1-3. VITAL RECORDS.

Rule 511-1-3-.01. Forms.

All forms, certificates, and reports used in the system of Vital Records are the property of the Georgia Department of Public Health and shall be surrendered to the State Registrar of Vital Records, hereinafter referred to as "State Registrar", upon demand. The forms prescribed and distributed by the State Registrar for reporting vital events shall be used only for official purposes. Only those forms furnished or approved by the State Registrar shall be used in the reporting of vital events or in making copies thereof.

Cite as Ga. Comp. R. & Regs. R. 511-1-3-.01
Authority: O.C.G.A. Secs. 31-2A-6, 31-10-3, 31-10-5.
History. Original Rule entitled "Forms" adopted. F. Sep. 20, 2013; eff. Oct. 10, 2013.

Rule 511-1-3-.02. Requirements for Preparation of Certificates.

(1) All certificates and reports relating to Vital Records registration must be typewritten on a form or in a format prescribed by the State Registrar. All certificates or reports may be filed and registered by electronic or other means as approved by the State Registrar. All entries and signatures required shall be entered in black or blue-black, unfading ink. Unless otherwise directed by the State Registrar, no certificate shall be considered complete and acceptable for registration that:

(a) Does not have the certifier's name typed or printed legibly under his or her signature as required;

(b) Does not supply all items of information called for thereon, or satisfactorily account for their omission;

(c) Contains alterations or erasures;

(d) Does not contain handwritten signatures as required;

(e) Is marked "copy" or "duplicate";

(f) Is a carbon copy;

(g) Is prepared on an improper or unauthorized form;

(h) Contains improper or inconsistent data;

(i) Contains an indefinite cause of death which denotes only symptoms of disease or conditions resulting from disease; or

(j) Is not prepared in conformity with regulations or instructions issued by the State Registrar or filed within the time limits prescribed.

(2) All Vital Records, certificates, reports and other documents must be in the English language or be accompanied by a certified translation in the English language, as designated by Resolution No. 70 of the General Assembly, Ga. Laws 1986, Page 529. The certification must be by the translator and must certify to the accuracy of the translation. The Department reserves the right to verify the accuracy of any translation.

(3) The Department reserves the right to verify the jurisdictional basis of any court order upon which a vital record is to be made or amended or otherwise affected, and return any such order to the registrant for amendment or clarification if in the Department's opinion the order does not sufficiently authorize or specify the vital record action sought.

(4) Certified or other copies of Vital Records may be obtained either at the State Office of Vital Records in Atlanta, or a designated office having the record.

Cite as Ga. Comp. R. & Regs. R. 511-1-3-.02
Authority: O.C.G.A. Secs. 31-2A-6, 31-10-3, 31-10-5.
History. Original Rule entitled "Requirements for Preparation of Certificates" adopted. F. Sep. 20, 2013; eff. Oct.

10, 2013.

Rule 511-1-3-.03. Designation of Additional Offices.

(1) The State Registrar shall delegate such duties and responsibilities to such offices as he or she deems necessary to insure the efficient operation of the Vital Records registration system. These may include any or all of the following:

(a) The receipt and processing of birth, death, and spontaneous fetal death certificates. This would include the receipt of these records from the person responsible for filing the record, examining them for accuracy and completeness, the rejection of incomplete or inaccurate records, and forwarding them to the State Office of Vital Records at intervals prescribed by the State Registrar or as specified by law;

(b) Issuance of certified copies of birth or death certificates. The records from which the certified copies are issued shall be provided by the State Office of Vital Records. All forms and procedures used to issue the copies shall be provided or approved by the State Registrar;

(c) Acting as the agent of the State Registrar in their designated area and providing assistance to physicians, hospitals, funeral directors, and others in matters related to the Vital Records registration system.

(2) The State Registrar shall determine the responsibilities and duties of each office independently.

Cite as Ga. Comp. R. & Regs. R. 511-1-3-.03
Authority: O.C.G.A. Secs. 31-2A-6, 31-10-3, 31-10-5.
History. Original Rule entitled "Designation of Additional Offices" adopted. F. Sep. 20, 2013; eff. Oct. 10, 2013.

Rule 511-1-3-.04. Infants of Unknown Parentage: Foundling Registration.

(1) The report for an infant of unknown parentage shall be registered on a Certificate of Live Birth and shall:

(a) Have "foundling" plainly marked in the space provided for the child's name on the certificate;

(b) Show the required facts as determined by approximation and leave parentage data blank; and

(c) Show the signature required and title of the custodian of the infant in lieu of the attendant.

(2) When a report has been placed in a special file as provided by O.C.G.A. Section 31-10-10, only the State Registrar or his designee may inspect such information for purposes of properly administering the Vital Records program.

Cite as Ga. Comp. R. & Regs. R. 511-1-3-.04
Authority: O.C.G.A. Secs. 31-2A-6, 31-10-3, 31-10-10.
History. Original Rule entitled "Infants of Unknown Parentage: Foundling Registration" adopted. F. Sep. 20, 2013; eff. Oct. 10, 2013.

Rule 511-1-3-.05. Registration of Out of Institution Births.

(1) In any case where a birth occurs outside a hospital, or other recognized medical facility, without medical attendance and the birth certificate is filed by someone other than a health care provider, additional evidence in support of the facts of birth shall be completed and filed in the presence of the local Vital Records registrar in the county where the birth occurred. A birth certificate for a birth which occurs outside a recognized medical institution shall only be filed upon personal presentation of the following evidence by the individual(s) filing the certificate:

(a) Proof of pregnancy:

1. Prenatal records; or

2. Statement from a physician or other licensed health care provider who is qualified to determine pregnancy; or

3. Prenatal blood analysis or positive pregnancy test results from a laboratory.

(b) Proof of the mother's residence on the date of the out of institution birth:

1. A valid driver's license, or a state-issued identification card, which includes the mother's current residence on the face of the license or card; or

2. A rent receipt which includes the mother's name and address, and the name, address, and signature of the mother's landlord.

(c) An identifying document, with photograph, for the individual(s) personally presenting the evidence required to file the certificate.

(d) Affidavits:

1. At least two affidavits signed by persons present or in attendance at the birth, eighteen years or older; or

2. A signed affidavit from a licensed physician describing his or her knowledge of the mother prior to birth, and his or her knowledge of the newborn resulting from his or her first examination of the infant.

(2) At the discretion of the State Registrar, the procedures contained in these Regulations may be supplemented with additional requirements which may be needed to verify the facts of birth. Such additional requirements may include, but are not limited to:

(a) Supplemental information; or

(b) A home visit by a public health nurse or other health professional.

(3) The pregnant woman may appear in person before the local registrar, prior to giving birth to "pre-register" the birth. Completion of the birth certificate after the birth occurs is required before the birth shall be registered.

(4) If the required evidence is not available and the registrar is unable to verify the facts of the birth, the out of institution birth may be registered only by order of a court of competent jurisdiction.

Cite as Ga. Comp. R. & Regs. R. 511-1-3-.05
Authority: O.C.G.A. Secs. 31-2A-6, 31-10-3, 31-10-9.
History. Original Rule entitled "Registration of Out of Institution Births" adopted. F. Sep. 20, 2013; eff. Oct. 10, 2013.

Rule 511-1-3-.06. Who May Request the Registration of and Sign A Delayed Certificate of Birth.

(1) Any person born in this State whose birth is not recorded in this State, his or her parent or legal guardian, or their respective legal representative may request the registration of a delayed certificate of birth, subject to these Regulations and instructions issued by the State Registrar.

(2) Each delayed certificate of birth shall be signed and sworn to before an official authorized to administer oaths by the person whose birth is to be registered, if such person is 18 years of age or over, and is competent to sign and swear to the accuracy of the facts stated therein; otherwise the certificate shall be signed and sworn to by one of the parents of the registrant, his or her legal guardian, or their legal representative.

Cite as Ga. Comp. R. & Regs. R. 511-1-3-.06
Authority: O.C.G.A. Secs. 31-2A-6, 31-10-3, 31-10-11.
History. Original Rule entitled "Who May Request the Registration of and Sign A Delayed Certificate of Birth" adopted. F. Sep. 20, 2013; eff. Oct. 10, 2013.

Rule 511-1-3-.07. Facts to be Established for a Delayed Registration of Birth.

The minimum facts which must be established by documentary evidence shall be the following:

(a) The full name of the person at the time of birth;

(b) The date of birth;

(c) The place of birth;

(d) The full maiden name of the mother; and

(e) The full name of the father; except that if the mother was not married either at the time of conception or birth, the name of the father shall not be entered on the delayed certificate except as provided in Rule 511-1-3-.08.

Cite as Ga. Comp. R. & Regs. R. 511-1-3-.07
Authority: O.C.G.A. Secs. 31-2-3, 31-10-3, 31-10-11.
History. Original Rule entitled "Facts to be Established for a Delayed Registration of Birth" adopted. F. Sep. 20, 2013; eff. Oct. 10, 2013.

Rule 511-1-3-.08. Child Names on Birth Certificates.

(1) The surname of the child shall be entered on the birth certificate in accordance with the following rules:

(a) The surname of the child shall be the surname of the father in the following cases:

1. If the mother is married to the father either at the time of conception or at the time of birth, then the surname of the mother's husband shall be entered, unless paternity has been determined otherwise by a court of competent jurisdiction.

2. If the mother is not married to the father either at the time of conception or at the time of birth, then the name of the father shall be entered only if he and the mother have signed a written consent. Such a written consent includes, but is not limited to, a paternity acknowledgement executed in accordance with Code Section 19-7-46.1.

3. If a court of competent jurisdiction has issued an order determining the paternity of the child, then the surname of the father shall be entered in accordance with the order of the court.

(b) In all other cases, the surname of the child shall be the legal surname of the mother at the time of birth as designated by the mother.

(c) Notwithstanding subsections (a) and (b) above, the parents may designate a surname that is not the legal surname of the mother or father, if that surname is chosen in accordance with a *bonafide* cultural naming convention practiced in the nation of origin of one or both of them.

(2) No portion of the child's name as entered on the birth certificate shall include any number, symbol, or other non-identifying name information, nor shall it include any word or term that constitutes an obscenity in any language.

(3) When evidence is presented reflecting a legal change of status by adoption of a person born in this State, legitimation, paternity determination, or acknowledgement of paternity, a new birth certificate may be established to reflect such change. The existing birth certificate and the evidence upon which the new birth certificate was based shall be placed in a special file. Such file shall not be subject to inspection except upon order of a court of competent jurisdiction, or by the State Registrar or designee for purposes of properly administering the Vital Records program.

Cite as Ga. Comp. R. & Regs. R. 511-1-3-.08
Authority: O.C.G.A. Secs. 31-2A-6, 31-10-3, 31-10-14.
History. Original Rule entitled "Facts to be Established for a Delayed Registration of Birth" adopted. F. Sep. 20, 2013; eff. Oct. 10, 2013.
Repealed: New Rule entitled "Child Names on Birth Certificates" adopted. F. May 27, 2014; eff. June 16, 2014.

Rule 511-1-3-.09. Documentary Evidence - Requirements for Delayed Registration.

(1) To be acceptable for filing, the name of the registrant, the date of birth, place of birth, and parentage entered on a delayed certificate of birth shall be substantiated by at least:

(a) Two different pieces of documentary evidence, acceptable under Rule 511-1-3-.10 if the record is filed within seven years of the date of birth. Facts of parentage shall be supported by at least one document.

(b) Three different pieces of documentary evidence, acceptable under Rule 511-1-13-.10 if the record is filed seven years or more after the date of birth. Facts of parentage shall be supported by at least one document.

(2) All documents submitted as evidence:

(a) For persons under the age of seven years, must have been established within the first three years of the date of birth and must have been created at least one year prior to the date of application;

(b) For persons age seven years or older, must have been established at least ten years prior to the date of application to register a delayed birth certificate, or within three years of the date of birth.

Cite as Ga. Comp. R. & Regs. R. 511-1-3-.09
Authority: O.C.G.A. Secs. 31-2A-6, 31-10-3, 31-10-11.
History. Original Rule entitled "Documentary Evidence -- Requirements for Delayed Registration" adopted. F. Sep. 20, 2013; eff. Oct. 10, 2013.

Rule 511-1-3-.10. Documentary Evidence - Acceptability.

(1) The State Registrar may establish additional written procedures for all documentary evidence requirements to substantiate any amendment to a vital record or to substantiate the required items on a delayed birth certificate. The State Registrar shall determine the acceptability of all documentary evidence submitted, and establish a priority of best evidence.

(2) Documents presented, such as census, hospital, church, or school records must be from independent sources and shall be in the form of the original record or a duly certified copy thereof, or a signed statement from the custodian of the record or document. Affidavits of personal knowledge or bible records are not acceptable as evidence to establish a delayed certificate of birth, or to amend a birth certificate.

Cite as Ga. Comp. R. & Regs. R. 511-1-3-.10
Authority: O.C.G.A. Secs. 31-2A-6, 31-10-3, 31-10-11.
History. Original Rule entitled "Documentary Evidence -- Acceptability" adopted. F. Sep. 20, 2013; eff. Oct. 10, 2013.

Rule 511-1-3-.11. Abstraction of Documentary Evidence.

(1) The State Registrar, or his or her designee, shall abstract onto the amended birth certificate form or the delayed certificate of birth a description of each document submitted to support the alleged amendment or the facts shown on the delayed birth certificate. This description shall include the following:

(a) The title or description of the document;

(b) The name and address of the custodian, if the document is an original or certified copy of a record, or a signed statement from the custodian;

(c) The date of the original filing of the document being abstracted and,

(d) All birth facts required by these Rules, contained in each document accepted as evidence.

(2) All documents submitted in support of an amendment or for the registration of a delayed birth certificate shall be returned to the applicant after review.

Cite as Ga. Comp. R. & Regs. R. 511-1-3-.11
Authority: O.C.G.A. Secs. 31-2A-6, 31-10-3, 31-10-11.
History. Original Rule entitled "Abstraction of Documentary Evidence" adopted. F. Sep. 20, 2013; eff. Oct. 10, 2013.

Rule 511-1-3-.12. Certification by the State Registrar.

(1) The State Registrar, or his or her designated representative, shall, by signature, certify:

(a) That no prior birth certificate is on file for the person whose birth is to be recorded;

(b) That he or she has reviewed the evidence submitted to establish the facts of birth; and

(c) That the abstract of the evidence appearing on the delayed certificate of birth accurately reflects the nature and content of the document.

(2) If an original birth certificate with a State file number is subsequently discovered for the registrant the delayed birth certificate shall be null and void and removed from the file. The State Registrar shall notify the registrant by regular mail upon taking such action.

Cite as Ga. Comp. R. & Regs. R. 511-1-3-.12
Authority: O.C.G.A. Secs. 31-2A-6, 31-10-3, 31-10-11.
History. Original Rule entitled "Certification by the State Registrar" adopted. F. Sep. 20, 2013; eff. Oct. 10, 2013.

Rule 511-1-3-.13. Dismissal After One Year.

(1) Applications for amendments and delayed certificates which have not been completed within one year from the date of application may be dismissed at the discretion of the State Registrar.

(2) When the applicant has presented to the State Registrar, or his or her representative, documentation and still is not able to meet the minimum requirements to amend a birth certificate or establish a delayed certificate of birth, as set forth in these Rules, the

applicant must be advised in writing of the State Registrar's decision and the right of judicial appeal as provided by O.C.G.A. Section 31-10-12.

Cite as Ga. Comp. R. & Regs. R. 511-1-3-.13
Authority: O.C.G.A. Secs. 31-2A-6, 31-10-3, 31-10-11.
History. Original Rule entitled "Dismissal After One Year" adopted. F. Sep. 20, 2013; eff. Oct. 10, 2013.

Rule 511-1-3-.14. Legitimation by Marriage.

If the natural parents marry after the birth of a child, a new certificate of birth shall be prepared by the State Registrar for a child born in this State upon receipt of a notarized legitimation affidavit signed by the natural parents of said child, together with a certified copy of the parents' marriage record. However, if the mother or the putative father is deceased at the time an application for amendment of the birth certificate is made, or another person is shown as the father of the child on the original certificate, or the birth certificate reflects that the natural mother was married at the time of conception, birth, or any time between conception and birth, a new certificate may be prepared only when a determination of paternity is made by a court of competent jurisdiction in the State of Georgia, or a court of like jurisdiction from any other State or Territory, or following adoption of a child born in this State. Such court order must specify the name to be removed and the name to be added as father of the child.

Cite as Ga. Comp. R. & Regs. R. 511-1-3-.14
Authority: O.C.G.A. Secs. 31-2A-6, 31-10-3, 31-10-14.
History. Original Rule entitled "Legitimation by Marriage" adopted. F. Sep. 20, 2013; eff. Oct. 10, 2013.

Rule 511-1-3-.15. Determination of Paternity.

A new certificate of birth shall be prepared by the State Registrar for a child born in this State upon receipt of a certified copy of a determination of paternity by a court of competent jurisdiction together with a request from the natural mother or other person having legal custody of said child that such new certificate be prepared. If the surname of the child is not decreed by the court, the surname shall be entered on the new certificate as attested to by both parents. If both parents cannot agree upon a surname, the name shall be the same as that listed on the original birth certificate.

Cite as Ga. Comp. R. & Regs. R. 511-1-3-.15
Authority: O.C.G.A. Secs. 31-2A-6, 31-10-3, 31-10-14.
History. Original Rule entitled "Determination of Paternity" adopted. F. Sep. 20, 2013; eff. Oct. 10, 2013.

Rule 511-1-3-.16. Affidavit of Paternity.

A new certificate of birth shall be prepared by the State Registrar for a child born out of wedlock in this State upon receipt of a notarized affidavit of paternity signed by both parents. The

notarized statement must also include the surname of the child to be listed on the certificate. However, if another man is shown as the father of the child on the original certificate, or the birth certificate reflects that the natural mother was married at the time of conception, birth, or any time between conception and birth, a new certificate may be prepared only upon presentation of an order declaring paternity issued from a court of competent jurisdiction.

Cite as Ga. Comp. R. & Regs. R. 511-1-3-.16
Authority: O.C.G.A. Secs. 31-2A-6, 31-10-3, 31-10-9, 31-10-14.
History. Original Rule entitled "Affidavit of Paternity" adopted. F. Sep. 20, 2013; eff. Oct. 10, 2013.

Rule 511-1-3-.17. New Certificate.

(1) The new certificate of birth prepared for a person born in this State after adoption, legitimation, determination of paternity, or acknowledgement of paternity shall be on the form prescribed by the Department and shall include the following items and such other information necessary to complete the certificate:

(a) The name of the child as it will appear on the new certificate;

(b) The date and place of birth as transcribed from the original certificate;

(c) The names and personal particulars of the adoptive parents or the natural parents whichever is appropriate;

(d) The birth number assigned to the original birth certificate;

(e) The original filing date; and

(f) The name of the attendant, printed or typed.

(2) The information necessary to locate the existing certificate and to complete the new certificate shall be submitted to the State Registrar or his or her designee on forms prescribed and approved by the State Registrar.

(3) A State file number from the delayed numbering series will be assigned to certificates prepared in this State for persons born in a foreign country, not entitled to citizenship at birth, and shall be prepared on a Certificate of Foreign Birth.

(4) A State file number from the delayed numbering series will be assigned to certificates prepared for full adoptions, where neither parent is the natural parent, for persons born in this State and the adoptive parents elect to show the place of birth as the residence of the adoptive parents at the time of the adoptee's birth. The place of birth indicated must be located in Georgia.

Cite as Ga. Comp. R. & Regs. R. 511-1-3-.17
Authority: O.C.G.A. Secs. 31-2A-6, 31-10-3, 31-10-14.

History. Original Rule entitled "New Certificate" adopted. F. Sep. 20, 2013; eff. Oct. 10, 2013.

Rule 511-1-3-.18. Existing Certificate to be Placed in a Special File.

(1) After preparation of a new certificate for a person born in this State, the existing birth certificate and the evidence upon which the new certificate was based are to be placed in a special file. Unless otherwise provided by law, such file shall not be subject to inspection, except upon order of a court of competent jurisdiction or by the State Registrar or his or her designee for purposes of properly administering the vital statistics program.

(2) After preparation of a special certificate of birth following adoption of a person born outside this State, the copy of the certificate from the State where birth actually occurred shall be placed in a special file. Unless otherwise provided by law, such file shall not be subject to inspection except upon order of a court of competent jurisdiction or by the State Registrar or his or her designee for purposes of properly administering the vital statistics program.

Cite as Ga. Comp. R. & Regs. R. 511-1-3-.18
Authority: O.C.G.A. Secs. 31-2A-6, 31-10-3, 31-10-14, 31-10-15.
History. Original Rule entitled "Existing Certificate to be Placed in a Special File" adopted. F. Sep. 20, 2013; eff. Oct. 10, 2013.

Rule 511-1-3-.19. Reporting of Deaths.

(1) **For whom required.** A report of death shall be filed for the following persons:

(a) A person who dies in this State;

(b) A person whose body is discovered in this State;

(c) A person who dies on a moving conveyance and whose body is first removed from the conveyance in this State; and

(d) A spontaneous fetal death occurring in this State.

(2) **Manner of reporting.** Death reports, including the certification of cause of death, shall be filed electronically with the Office of Vital Records in such manner as may be determined by the State Registrar.

(3) **Information to be reported.** A report of death shall include the following information, if known or ascertainable from the decedent's next of kin or the best qualified person or source available:

(a) Decedent's full legal name;

(b) Decedent's date of birth;

(c) Decedent's date of death. If the date of death is unknown, then the date on which the body was found shall be entered.

(d) Place of death.

1. If unknown, then the place where the body was found shall be entered.

2. If death occurred on a moving conveyance within the United States, then the place where the body was first removed from the conveyance shall be used.

3. If death occurred on a moving conveyance in international waters or airspace, then the actual place of death insofar as it can be determined shall be entered.

(e) Cause of death, in accordance with subsection (5) of this Rule.

(f) Any other such information as the State Registrar may require.

(4) **Who must file.** The report of death shall be filed by the funeral director who first assumes custody of the body, unless a death report was previously made by the hospital or other institution in which death occurred.

(5) **Cause of death.** The electronic death report filed in accordance with subsections (1) through (4) of this Rule shall be supplemented by an electronic report of the cause of death. The cause of death shall be reported by:

(a) The attending physician, if the decedent is a non-resident burn victim that dies in a treatment facility in this State;

(b) The physician attending the decedent for the illness or condition which resulted in death;

(c) If there is no attending physician as provided in subsection (5)(b) of this Rule, or with such physician's approval, certification of the cause of death may be made by any of the following persons, provided they had access to the decedent's medical history, viewed the decedent at or after death, and death occurred due to natural causes:

1. A physician who is an associate of the attending physician;

2. The chief medical officer of the institution in which death occurred;

3. A physician who performed an autopsy on the decedent; or

4. If death occurred without medical attendance, or if inquiry was required by Title 45, Chapter 16, Article 2, then by the county medical examiner or coroner.

(d) A determination of the cause of death must be made by the responsible physician, medical examiner, or coroner; however, the task of reporting that determination to the Office of Vital Records may be delegated to a person under his or her supervision.

(e) Notwithstanding any other provision of this Rule, if death occurs during a state of emergency declared by the Governor due to an influenza pandemic, then cause of death may be certified and reported by any registered nurse or physician's assistant, provided that such person had access to the decedent's medical history, viewed the decedent at or after death, and death occurred due to natural causes.

(6) **When reporting is due.**

(a) The report of death shall be made within three calendar days after death.

(b) Certification of the cause of death shall be made within three calendar days after death; provided, however, that if death occurred without medical attendance, or in cases subject to inquiry under Title 45, Chapter 16, Article 2, certification shall be made within 30 days after notification of death.

(c) If for any reason the cause of death cannot be determined within 48 hours after death, then "pending" shall be entered on the death report and amended promptly after the determination is made. Until the cause of death is certified, final disposition of the body shall not be made unless authorized by the attending physician or, with regard to a body subject to inquiry under Title 45, Chapter 16, Article 2, by the county coroner or medical examiner.

Cite as Ga. Comp. R. & Regs. R. 511-1-3-.19
Authority: O.C.G.A. §§ 31-2A-6, 31-10-3, 31-10-15.
History. Original Rule entitled "Acceptance of Incomplete Death Certificate" adopted. F. Sep. 20, 2013; eff. Oct. 10, 2013.
Amended: New title "Reporting of Deaths." F. Oct. 25, 2017; eff. Nov. 14, 2017.
Amended: F. Sep. 6, 2019; eff. Oct. 7, 2019, as specified by the Agency.

Rule 511-1-3-.20. [Repealed].

Cite as Ga. Comp. R. & Regs. R. 511-1-3-.20
Authority: O.C.G.A. §§ 31-2A-6, 31-10-3, 31-10-15, 31-10-19.
History. Original Rule entitled "Hospital or Institution May Assist in Preparation of Death Certificate" adopted. F. Sep. 20, 2013; eff. Oct. 10, 2013.

Repealed: F. Oct. 25, 2017; eff. Nov. 14, 2017.

Rule 511-1-3-.21. Disposition of Reports of Induced Terminations of Pregnancy.

(1) Reports of induced termination of pregnancy are collected solely for epidemiological purposes. Such reports may be retained for as long as the State Registrar deems necessary and then shall be destroyed.

(2) The provisions of this Rule shall also apply to all records of induced termination of pregnancy filed prior to the adoption of this Rule.

Cite as Ga. Comp. R. & Regs. R. 511-1-3-.21
Authority: O.C.G.A. §§ 31-2A-6, 31-10-3, 31-10-15, 31-10-19.
History. Original Rule entitled "Disposition of Reports of Induced Terminations of Pregnancy" adopted. F. Sep. 20, 2013; eff. Oct. 10, 2013.
Amended: F. Oct. 25, 2017; eff. Nov. 14, 2017.

Rule 511-1-3-.22. Removal of Body.

Before removing a dead body or fetus from the place of death, the person removing such body or fetus shall:

(a) Obtain assurance from the attending physician, the associate physician, or the chief medical officer of the institution in which death occurred that the death is from natural causes and that the physician will assume responsibility for certifying the cause of death or fetal death and receive written permission to remove the body from the place of death; or

(b) Notify the coroner or medical examiner if the case comes within his or her jurisdiction or, if the physician cannot certify the cause of death, obtain assurance from the coroner or medical examiner that he or she will assume responsibility for certifying the cause of death, and obtain written permission to remove the body.

Cite as Ga. Comp. R. & Regs. R. 511-1-3-.22
Authority: O.C.G.A. Secs. 31-2A-6, 31-10-3, 31-10-15, 31-10-20.
History. Original Rule entitled "Removal of Body" adopted. F. Sep. 20, 2013; eff. Oct. 10, 2013.

Rule 511-1-3-.23. Permits for Disposition, Disinterment and Reinterment.

(1) Permits for Disposition of Human Remains.

(a) The local registrar shall make arrangements to ensure that disposition permits may be issued 24 hours a day, seven days a week. For this purpose, the local registrar may appoint local persons or entities, including hospitals, hospices, and funeral homes, to serve as deputy local registrars for the limited purpose of issuing disposition permits in accordance with this Rule.

(b) A disposition permit shall not be issued until the cause of death has been certified by a person authorized to do so under DPH Rule 511-1-3-.19(5); authorization has been given by the decedent's attending physician; or, with regard to a body subject to inquiry under Title 45, Chapter 16, Article 2, approval has been given by the county coroner or medical examiner.

(2) Permits for Disinterment and Reinterment.

(a) The local registrar shall issue a permit for disinterment and reinterment of a dead body or fetus, including interred cremains, upon receipt of proper application on a form prescribed by the State Registrar, or upon receipt of an order of a court of competent jurisdiction directing such disinterment.

(b) The local registrar may issue one permit for disinterment and reinterment of all remains in a mass disinterment provided that, insofar as possible, the remains of each body shall be identified and the place of disinterment and reinterment specified.

(c) A permit for disinterment and reinterment shall be permission for disinterment, transportation, and reinterment. When disinterment and reinterment are in the same cemetery, a permit shall not be required.

Cite as Ga. Comp. R. & Regs. R. 511-1-3-.23
Authority: O.C.G.A. §§ 31-2A-6, 31-10-3.
History. Original Rule entitled "Permits for Disposition, Disinterment and Reinterment" adopted. F. Sep. 20, 2013; eff. Oct. 10, 2013.
Amended: F. Oct. 25, 2017; eff. Nov. 14, 2017.
Amended: F. Sep. 6, 2019; eff. Oct. 7, 2019, as specified by the Agency.
Amended: F. May 24, 2021; eff. June 23, 2021, as specified by the Agency.

Rule 511-1-3-.24. Amendment of Minor Errors on Birth, Death, and Spontaneous Fetal Death Certificates During the First Year.

(1) Amendment of obvious errors, transposition of letters in words of common knowledge or omissions, but not to include the father's name on a birth certificate or a spontaneous fetal death certificate, may be made on the original birth, death, or spontaneous fetal death certificate by the State Registrar or designated person within the first year of the date of birth or date of death either upon his or her own observation or query. When such

additions or minor amendments are made by the State Registrar or designated person, a notation as to the source of the information, together with the date the change was made and the initials of the authorized agent making the change shall be made on the back of the certificate in such a way as not to become a part of any certification issued. The certificate shall not be marked "Amended."

(2) Unless otherwise provided by Statute or in these Rules, correction of errors on birth, death and spontaneous fetal death certificates may be made on the face of the original record during the first year following the event.

(3) Some corrections may require documentary evidence to substantiate the correction requested. The State Registrar may establish written requirements and procedures for corrections to all Vital Records. The certificate shall not be marked "Amended."

(4) In the absence of evidence of marriage and or dissolution of marriage, to change the marital status on a death certificate or remove or change the name of a spouse listed on a death certificate requires an order from a court of competent jurisdiction.

Cite as Ga. Comp. R. & Regs. R. 511-1-3-.24
Authority: O.C.G.A. Secs. 31-2A-6, 31-10-3, 31-10-23.
History. Original Rule entitled "Amendment of Minor Errors on Birth, Death, and Spontaneous Fetal Death Certificates During the First Year" adopted. F. Sep. 20, 2013; eff. Oct. 10, 2013.

Rule 511-1-3-.25. All Other Amendments.

(1) Unless otherwise provided in these Rules or by Statute, all other amendments to a vital record after the first year of the event shall be supported by:

(a) An affidavit setting forth:

1. Information to identify the certificate;
2. The incorrect data as it is listed on the certificate;
3. The corrected entry as it should appear;
4. An abstract of the evidence which substantiates the amendment of the certificate.

(b) One or more items of documentary evidence which support the alleged facts, acceptable under Rule 511-1-3-.10 and which were established at least five years prior to the date of application for amendment or within seven years of the date of the event.

(2) If the record is for a child less than twelve years of age, the documentary evidence must be at least five years old or not more than three years after the date of birth shown on the certificate. In all cases, documents submitted must have been created at least one year prior to application for amendment.

(3) Correction of the spelling of a surname requires one document which has been in existence prior to the registrant's seventh birthday, and shows the correct spelling of the parents' surname.

(4) The affidavit required to correct a birth or spontaneous fetal death certificate under the provisions of this Rule, may be accepted from one of the parents, the legal guardian, or a registrant who has reached the age of majority in the case of birth correction.

(5) The affidavit to correct a death certificate under the provisions of this Rule may be accepted from the informant, the funeral director responsible for completing the certificate, the person who originally certified cause of death, or a family member of the decedent.

(6) The State Registrar or, his or her designee, shall evaluate the evidence submitted in support of any amendment, and shall determine whether an amendment should be allowed. If the evidence submitted is rejected, the State Registrar, or his or her designee, shall inform the applicant of the rejection and the reasons for the rejection in writing. The applicant shall be advised of the right to appeal under Rule 511-1-3-.39.

(7) The State Registrar may establish additional written procedures for documentary evidence requirements to substantiate all requested amendments for birth certificates, spontaneous fetal death certificates and death certificates.

Cite as Ga. Comp. R. & Regs. R. 511-1-3-.25
Authority: O.C.G.A. §§ 31-2A-6, 31-10-3, 31-10-23.
History. Original Rule entitled "All Other Amendments" adopted. F. Sep. 20, 2013; eff. Oct. 10, 2013.
Amended: F. Oct. 25, 2017; eff. Nov. 14, 2017.

Rule 511-1-3-.26. Who May Apply to Amend a Vital Record.

(1) To amend a birth certificate, application may be made by one of the parents listed on the certificate, the legal guardian, a registrant who has reached the age of majority, or the individual responsible for filing the certificate.

(2) To amend a death certificate or a spontaneous fetal death certificate, application may be made by the informant listed on the certificate, a family member, their legal representative, or the funeral director who signed the death certificate or spontaneous fetal death certificate. Application to amend the cause of death may be made only by the physician who originally certified cause of death, the attending physician of the decedent, or the coroner or medical examiner.

(3) Requests to amend applications for a marriage license or certificates of marriage shall be made to the Judge of the Probate Court of the county in which the license was issued.

(4) Requests to amend reports of divorce shall be made to the Clerk of the Superior Court of the county in which the decree was granted.

(5) To amend a Report of Induced Termination of Pregnancy, a signed statement must be received from the person in charge of the clinic or institution from which the report was prepared, stating in what manner the report has been corrected.

Cite as Ga. Comp. R. & Regs. R. 511-1-3-.26
Authority: O.C.G.A. §§ 31-2A-6, 31-10-3, 31-10-23.
History. Original Rule entitled "Who May Apply to Amend a Vital Record" adopted. F. Sep. 20, 2013; eff. Oct. 10, 2013.
Amended: F. Oct. 25, 2017; eff. Nov. 14, 2017.

Rule 511-1-3-.27. Amendment of Registrants' Given Names on Birth Certificates Within the First Year.

(1) Until the registrant's first birthday, given names may be added to, changed, or corrected upon receipt of an affidavit signed by;

   (a) Both parents; or

   (b) The mother of a child born out of wedlock; or

   (c) Either parent in the case of the death or incapacity of the other; or

   (d) The legal guardian or agency having legal custody of the registrant.

(2) When a paternity affidavit has been completed and filed, no further amendment to the child's name shall be made except upon receipt of an order from an appropriate court, or if the natural parents marry after the birth of the child and thereby legitimate the child.

(3) After one year from the date of birth, the provisions of Rules 511-1-3-.25 and 511-1-3-.10 must be followed to add a given name omitted on the birth certificate, or to amend a given name if the name was misspelled on the birth certificate. The State Registrar may change a given name after one year only upon receipt of an order from a court of competent jurisdiction requiring such change.

Cite as Ga. Comp. R. & Regs. R. 511-1-3-.27
Authority: O.C.G.A. Secs. 31-2A-6, 31-10-3, 31-10-23.
History. Original Rule entitled "Amendment of Registrants' Given Names on Birth Certificates Within the First Year" adopted. F. Sep. 20, 2013; eff. Oct. 10, 2013.

Rule 511-1-3-.28. Medical Items.

Unless otherwise provided by Statute or in these Rules, all items of a medical nature on a vital record may be amended only upon receipt of a signed statement from those persons responsible for the completion of such items. The State Registrar may require documentary evidence to substantiate the requested amendment.

Cite as Ga. Comp. R. & Regs. R. 511-1-3-.28
Authority: O.C.G.A. Secs. 31-2A-6, 31-10-3, 31-10-23.
History. Original Rule entitled "Medical Items" adopted. F. Sep. 20, 2013; eff. Oct. 10, 2013.

Rule 511-1-3-.29. Amendment of the Same Item More than Once.

Upon amendment of an item in a vital record, that item shall not be amended again except upon receipt of a court order from a court of competent jurisdiction. A paternity affidavit and a legitimation affidavit shall be considered to be an amendment; therefore, once a paternity affidavit or legitimation affidavit has been completed and filed, no further correction of the child's name shall be made except upon receipt of an order from a court of competent jurisdiction.

Cite as Ga. Comp. R. & Regs. R. 511-1-3-.29
Authority: O.C.G.A. Secs. 31-2A-6, 31-10-3, 31-10-23.
History. Original Rule entitled "Amendment of the Same Item More than Once" adopted. F. Sep. 20, 2013; eff. Oct. 10, 2013.

Rule 511-1-3-.30. Amendment of Date of Birth.

The date of birth may be changed no more than one year by supporting evidence created prior to the registrant's seventh birthday. No date of birth shall be amended to show a date of birth after the file date listed on the original birth certificate. To change the year of birth by more than one year requires an order from a Superior Court or Probate Court.

Cite as Ga. Comp. R. & Regs. R. 511-1-3-.30
Authority: O.C.G.A. Secs. 31-2A-6, 31-10-3, 31-10-23.
History. Original Rule entitled "Amendment of Date of Birth" adopted. F. Sep. 20, 2013; eff. Oct. 10, 2013.

Rule 511-1-3-.31. Methods of Amending Certificates.

Certificates of birth, death, spontaneous fetal death, marriage, or a report of induced termination of pregnancy, may be amended by the State Registrar by the following methods:

(a) Completing the item on the certificate, as provided elsewhere in these Regulations where the item was left blank on the original certificate, provided the amendment takes place during the first year following the event.

(b) Drawing a single line through the item to be amended and inserting the correct data immediately above or to the side thereof. The line drawn through the original entry shall not obliterate such entry. A short explanation of the change and the justification or authorization should be typed or written on the back of the certificate. The person making the change on the certificate shall show the date of the change and print or type their name on the reverse of the certificate.

(c) Unless otherwise provided by Statute or in these Regulations, a special Amended birth certificate Form shall be completed for all corrections or additions made on a birth certificate after the first year. Such form shall include the incorrect information as it appears on the original birth certificate, the correct information as it should appear, an abstract of the documentation used to substantiate the amendment, and sufficient information about the registrant to link the special form to the original record. Copies of the amended birth certificate shall be issued in lieu of copies of the original certificate. County copies of the original certificate shall be forwarded to the State Registrar by the local custodian upon receipt of a copy of the amended certificate.

(d) A certificate of birth amended pursuant to the provisions of Section 31-10-23(e) of the Official Code of Georgia Annotated shall be amended by preparing a new certificate. The item numbers of the entries that were amended shall not, however, be identified on the new certificate or on any certified copies that may be issued of that certificate. A new State file number shall be assigned to the new certificate. The original certificate shall be removed from the active files and placed with the order in the confidential files.

Cite as Ga. Comp. R. & Regs. R. 511-1-3-.31
Authority: O.C.G.A. Secs. 31-2A-6, 31-10-3, 31-10-23.
History. Original Rule entitled "Methods of Amending Certificates" adopted. F. Sep. 20, 2013; eff. Oct. 10, 2013.

Rule 511-1-3-.32. Record Preservation.

(1) When an authorized reproduction of a vital record has been properly prepared by the State Registrar and when all steps have been taken to insure the continued preservation of the information, the record at the State or County offices of Vital Records from which such authorized reproduction was made may be disposed of by the State Registrar. Such record may not be disposed of, however, until the quality of the authorized reproduction has been tested to insure that acceptable certified copies can be issued and until a security copy of such document has been placed in a secure location removed from the building where the authorized reproduction is housed.

(2) The State Registrar may offer the original documents from which the authorized reproductions are made to the Secretary of State. The Secretary of State may be allowed to retain permanently such records provided they adhere to the restrictions in the Vital Records law related to access to such records. If the Secretary of State does not wish to place such records in his or her files, the State Registrar shall be authorized to destroy the documents. Such destruction shall be by approved methods for disposition of confidential or sensitive documents.

Cite as Ga. Comp. R. & Regs. R. 511-1-3-.32
Authority: O.C.G.A. Secs. 31-2A-6, 31-10-3, 31-10-24.
History. Original Rule entitled "Record Preservation" adopted. F. Sep. 20, 2013; eff. Oct. 10, 2013.

Rule 511-1-3-.33. Disclosure of Vital Records and Information.

(1) Copies of vital records maintained by the Office of Vital Records, and information contained in such vital records, shall not be disclosed except as permitted by:

(a) Chapter 10 of Title 31;

(b) Code Section 19-7-46.1;

(c) the rules of the Department; or

(d) as directed by court order.

A vital record shall not be disclosed pursuant to subpoena or civil discovery request unless the requesting party demonstrates its right to the record under this Rule.

(2) For purposes of this Rule, the term certified copy means a copy of a vital record printed on colored stock and bearing the raised seal of the State Registrar. A person entitled to have a plain paper copy of a vital record may request that the copy be certified in accordance with Code Sections 24-9-920 and 24-8-803(9).

(3) A certified copy of a birth certificate may be issued only to the following persons or their legal representatives:

(a) The person whose birth is recorded on the certificate;

(b) A parent of such person, except as provided in subsection (4) below;

(c) A grandparent of such person;

(d) An adult brother or sister of such person;

(e) An adult child of such person;

(f) The living legal spouse of such person;

(g) A person who has been appointed, or who has applied in good faith to become, a legal guardian of such person; or

(h) A person who demonstrates that a certified copy of the birth certificate is needed to establish a legal right or claim.

A plain paper copy of a birth certificate may be issued only to a person entitled to receive a certified copy; provided, however, that if the birth occurred more than one hundred years before the date of request, a plain paper copy may be provided to any person. Further, a plain paper copy of the birth certificate of a deceased registrant may be issued to any person, so long as the fact of the registrant's death can be verified and the copy is clearly marked "deceased" in large letters on the face of the birth certificate.

(4) A natural parent of an adopted child with no legal right to custody may not have access to the child's birth records except upon court order.

(5) A certified copy of a death or spontaneous fetal death certificate may be issued only to the following persons or their legal representatives:

(a) A child, parent, legal living spouse, or other next of kin of the decedent;

(b) A person who has been appointed, or who has applied in good faith to become, the executor or administrator of the decedent's estate; or

(c) A person who demonstrates that a certified copy of the death certificate is needed to establish a legal right or claim.

A plain paper copy of a death certificate may be issued to any person; provided, however, that the decedent's Social Security number shall be redacted. Upon request, the cause of death may be omitted from either a certified copy or a plain paper copy of a death certificate.

(6) A certified copy of a voluntary acknowledgment of paternity, or a certified copy of a voluntary acknowledgment of legitimation executed prior to 1 July 2016, may be issued only to the following persons or their legal representatives:

(a) Either of the persons who signed the acknowledgment;

(b) The person whose paternity or legitimation was acknowledged, if she or she is as least 18 years of age;

(c) A person who has been appointed, or who has applied in good faith to become, a legal guardian or custodian of the person whose paternity or legitimation was acknowledged;

(d) A living legal spouse or next of kin of the person whose paternity or legitimation was acknowledged;

(e) An attorney who demonstrates that the certificate is needed for purposes of legal investigation on behalf of a client; or

(f) A licensed child-placing agency that demonstrates that the certificate is needed for official purposes.

A plain paper copy of a voluntary acknowledgement of paternity, or a voluntary acknowledgement of legitimation executed prior to 1 July 2016, may be issued only to a person entitled to receive a certified copy.

(7) The State Registrar, in his or her reasonable discretion, may disclose information from Vital Records for statistical or research purposes, subject to such conditions as the State Registrar may impose, including without limitation a written agreement to maintain the confidentiality of the information so disclosed.

(8) The State Registrar may provide copies of or disclose information from Vital Records to authorized representatives of Federal, State or County agencies who request such data in the conduct of their official duties.

(9) The State Registrar or local custodian shall not issue a copy of a vital record, or information contained in vital records, until a signed application has been received with the appropriate fee. To determine an applicant's right to information from a vital record, the State Registrar or local registrar may request additional information from the applicant, including without limitation proof of the applicant's identity or a sworn statement.

(10) Information contained in the "Information for Medical and Health Use Only" section on a birth certificate or spontaneous fetal death certificate, or the "Information for Statistical Purpose Only" section of the certificate of marriage or report of divorce, dissolution of marriage, or annulment, shall not be disclosed unless specifically authorized by the State Registrar for statistical or research purposes or upon court order.

Cite as Ga. Comp. R. & Regs. R. 511-1-3-.33
Authority: O.C.G.A. §§ 31-2A-6, 31-10-3, 31-10-25, 31-10-26; 2007 Op. Att'y Gen. No. 2007-4.
History. Original Rule entitled "Disclosure of Records" adopted. F. Sep. 20, 2013; eff. Oct. 10, 2013.
Amended: New title "Disclosure of Vital Records and Information." F. Oct. 19, 2018; eff. Nov. 11, 2018, as specified by the Agency.
Amended: F. Sep. 6, 2019; eff. Oct. 7, 2019, as specified by the Agency.

Rule 511-1-3-.34. Copies of Data from Vital Records.

(1) When a certified copy is issued, each certification shall be certified as a true copy by the officer in whose custody the record is entrusted, and shall include the date issued, the original signature or authorized facsimile thereof, of the issuing officer, the State Registrar's authorized facsimile signature, and the impressed seal of the issuing office. When certifying birth records which are not on file in the State Office of Vital Records or do not contain the State file number, a certifying statement which does not contain the facsimile signature of the State Registrar must be prepared by the issuing officer.

(2) When the State Registrar receives information or finds evidence that a certificate was registered through misrepresentation or fraud, he or she shall have authority to withhold the issuance of a certified copy of such certificate, electronically flag the certificate, remove the certificate from the files, and place the certificate and all evidence which supports the finding of misrepresentation or fraud in a special file. Such certificate will be marked "Void". The decision to invalidate a record shall be subject to appeal in accordance with Rule 511-1-3-.39.

Cite as Ga. Comp. R. & Regs. R. 511-1-3-.34
Authority: O.C.G.A. §§ 31-2A-6, 31-10-3, 31-10-26.
History. Original Rule entitled "Copies of Data from Vital Records" adopted. F. Sep. 20, 2013; eff. Oct. 10, 2013.
Amended: F. Sep. 6, 2019; eff. Oct. 7, 2019, as specified by the Agency.

Rule 511-1-3-.35. Fees for Copies and Searches.

(1) No certified copy shall be issued until the fee for the search of such copy is received unless specific approval has been obtained from the State Registrar or otherwise provided for by statute.

(2) For statistical research purposes, the State Registrar shall determine the fee for such services on the basis of the costs providing such services and determine the manner in which such costs must be paid.

(3) The State Registrar shall prescribe the fees to be paid for the replacement of a birth certificate subsequent to adoption, legitimation, paternity determination, paternity acknowledgement, court order, filing a delayed registration of birth, or an amendment of a vital record, provided that no fee shall be charged for an amendment completed within one year after the filing of the record.

Cite as Ga. Comp. R. & Regs. R. 511-1-3-.35
Authority: O.C.G.A. Secs. 31-2A-6, 31-10-3, 31-10-27.
History. Original Rule entitled "Fees for Copies and Searches" adopted. F. Sep. 20, 2013; eff. Oct. 10, 2013.

Rule 511-1-3-.36. Funeral Director's Records.

(1) Each funeral director shall keep a record containing, as a minimum, information about each dead body or fetus the funeral director disposes of, as follows:

(a) The date, place, and time of receipt;

(b) The date, place, and manner of disposition;

(c) If the dead body or fetus is delivered to another funeral director, the date of such delivery, and the name and address of the funeral director to whom delivered; and

(d) The items required by the certificate of death for those deaths for which the funeral director was required to file the certificate.

(2) Such records as described in Paragraph (1) above may be reviewed at the request of the State Registrar or his or her authorized representative.

Cite as Ga. Comp. R. & Regs. R. 511-1-3-.36
Authority: O.C.G.A. Secs. 31-2A-6, 31-10-3, 31-10-28.
History. Original Rule entitled "Funeral Director's Records" adopted. F. Sep. 20, 2013; eff. Oct. 10, 2013.

Rule 511-1-3-.37. Matching of Birth and Death Certificates.

(1) To protect the integrity of Vital Records and to prevent the fraudulent use of birth certificates of deceased persons, the State Registrar is authorized to match birth and death certificates in accordance with established written guidelines which provide the standards for determining a match does exist. These standards shall specify the information about the decedent which must be available and which must be compared to the information on the birth certificate before a match can be made. These items shall include as a minimum: name of decedent; name of father and maiden name of mother; date of birth or age of decedent; state of birth of decedent; county of birth; and marital status of decedent. No match shall be made unless there is documented proof of the fact of death.

(2) The death certificate State file number shall be posted to the corresponding birth certificate; the State file number of the corresponding birth certificate, to the death certificate; and the birth index duly marked. A birth certificate thus matched may be issued marked "Deceased".

Cite as Ga. Comp. R. & Regs. R. 511-1-3-.37
Authority: O.C.G.A. Secs. 31-2A-6, 31-10-3, 31-10-30.
History. Original Rule entitled "Matching of Birth and Death Certificates" adopted. F. Sep. 20, 2013; eff. Oct. 10, 2013.

Rule 511-1-3-.38. Transmittal of Certificates and Reports.

(1) Unless otherwise provided in this Chapter, a completed report of live birth, death, or spontaneous fetal death filed with a local registrar shall be transmitted to the State Office of Vital Records within two business days of receipt by the local registrar.

(2) Each official issuing marriage licenses shall forward to the State Office of Vital Records, before the tenth day of each month, the following information with respect to each completed marriage license returned to such official during the preceding month: gender, date of birth, number of marriage (e.g., first, second, third, etc.), and the first, middle, and last name of each party; city, county, and date of ceremony; name, title, and address of officiator; and name of probate judge or clerk.

(3) The Clerk of Superior Court shall complete and forward to the State Office of Vital Records, before the tenth day of each month, the following information with respect to each divorce, dissolution of marriage, or annulment decree granted during the preceding calendar month: civil action number; date of divorce decree; county of issuance; gender, date of birth, county of residence, number of marriage (e.g., first, second, third, etc.), and the first, middle, and last name of each party; original date of marriage; and number of children under 18 years of age.

(4) The Clerk of the Superior Court shall complete and forward to the State Office of Vital Records, before the 15th day of each month, all completed certificates of adoption, annulments of adoption, and amendments of decrees of adoption which were entered in the preceding calendar month.

Cite as Ga. Comp. R. & Regs. R. 511-1-3-.38
Authority: O.C.G.A. §§ 31-2A-6, 31-10-3, 31-10-9.
History. Original Rule entitled "Transmittal of Certificates and Reports" adopted. F. Sep. 20, 2013; eff. Oct. 10, 2013.
Amended: F. Mar. 2, 2016; eff. Mar. 22, 2016.
Amended: F. Oct. 25, 2017; eff. Nov. 14, 2017.

Rule 511-1-3-.39. Appeals and Hearings.

(1) Persons seeking to obtain or amend a vital record may appeal the action or refusal to act of local custodians, registrars, or employees of the Office of Vital Records, by filing an appeal in writing with the State Registrar. The appeal must specifically identify the employee or official involved, the action or refusal to act, and must state the complainant's right or standing to complain of the action or inaction.

(2) The State Registrar will make such investigation of the appeal as is necessary to resolve the matter. A written decision will be issued by the Registrar, except that the State Registrar may appoint a special assistant to investigate and decide the appeal in his or her name.

(3) The appointment of a local registrar or local custodian may be revoked for cause in the discretion of the State Registrar. A decision by the State Registrar to revoke an appointment may be appealed by filing a request in writing with the Department's Office of General Counsel within 30 days from the date of the decision. The appeal must state the factual grounds in support of the claim that the State Registrar has abused his or her discretion in rescinding the appointment. The appeal shall be immediately referred to the Office of State Administrative Hearings for hearing in accordance with Code Section 50-13-41. Prior to hearing by OSAH, the appellant may request a conference with the State Registrar before a member of the Board of Public Health appointed to serve as mediator. The purpose of the conference is to discuss any issues in dispute, to present any additional matters relevant to the State Registrar's decision, and to seek settlement. As a result of the conference, the mediator may recommend that the State Registrar's decision be affirmed, modified, or rescinded. If the matter is not settled by agreement of the parties, then the matter shall proceed to hearing before OSAH.

Cite as Ga. Comp. R. & Regs. R. 511-1-3-.39
Authority: O.C.G.A. §§ 31-2A-6, 31-10-3, 31-10-5.
History. Original Rule entitled "Appeals and Hearings" adopted. F. Sep. 20, 2013; eff. Oct. 10, 2013.
Amended: F. Mar. 2, 2016; eff. Mar. 22, 2016.

Rule 511-1-3-.40. Service of Process.

Legal process involving a Vital Records function or in a matter wherein the Vital Records Service is entitled to notice shall be served upon the Commissioner of Public Health. This Rule shall be cumulative of all other requirements imposed by law for service of process or notice upon the Department of Public Health.

Cite as Ga. Comp. R. & Regs. R. 511-1-3-.40
Authority: O.C.G.A. Secs. 31-2A-6, 31-10-3.
History. Original Rule entitled "Service of Process" adopted. F. Sep. 20, 2013; eff. Oct. 10, 2013.

Subject 511-1-4. ADMINISTRATIVE REVIEW PROCEEDINGS.

Rule 511-1-4-.01. Matters Eligible for Administrative Review.

(1) This Chapter shall apply to all requests to the Department for administrative review of a final action or order from a division of the Department or from a County Board of Health. For purposes of this Chapter, an "action or order of a County Board of Health" shall include an action or decision made by a District Health Director or his or her delegate. This Chapter shall not apply to decisions of the WIC program that are subject to DPH Rule 511-8-1.

(2) An action or order may be considered "final" and eligible for review if no further review is required at the county or Department level, and the action or order is effective immediately or upon a date certain.

(3) A person or entity is entitled to seek administrative review if such person or entity is a party to a proceeding before the Department or a County Board of Health and is aggrieved by the final order or action in that proceeding. "Proceeding" shall include actions taken with regard to a license, permit, or certification issued by the Department or by a County Board of Health.

Cite as Ga. Comp. R. & Regs. R. 511-1-4-.01
Authority: O.C.G.A. §§ 31-5-1 through 31-5-6.
History. Original Rule entitled "Matters Eligible for Administrative Review" adopted. F. Sep.1, 2016; eff. September 21, 2016.

Rule 511-1-4-.02. Designation of Review Officer.

The General Counsel of the Department shall serve as review officer to hear and decide all requests for administrative review, or shall designate another person within the Department to serve as review officer.

Cite as Ga. Comp. R. & Regs. R. 511-1-4-.02
Authority: O.C.G.A. §§ 31-5-1 through 31-5-6.
History. Original Rule entitled "Designation of Review Officer" adopted. F. Sep.1, 2016; eff. September 21, 2016.

Rule 511-1-4-.03. Procedure.

(1) A request for administrative review must be made in writing, addressed to the General Counsel in care of the Department, and received in the offices of the Department no later than thirty days after the date of the action or order for which review is sought. The request must include a copy of the action or order to be reviewed, and a statement of the reasons it should be overturned. If the request seeks review of an action or order of a County Board of Health, a copy of the request must be delivered to the District Health Director for that county at the same time it is sent to the Department.

(2) Upon receiving a copy of the request for review, the affected division of the Department or the District Health Director shall transmit a copy of all documents pertaining to the action or order under review, with a copy to the appellant. Copies may be transmitted in electronic form.

(3) No less than twenty days before the hearing, the review officer shall provide notice to both parties of the time, date, and place of the hearing. Notice shall be provided by certified mail, overnight delivery, or any other means to which the parties consent.

(4) The hearing shall be conducted in person or, if the parties consent, by teleconference.

(5) The purpose of the hearing is to give the parties an opportunity to argue their respective positions. No new testimony, documents, or other evidence will be introduced.

(6) The review officer shall prepare and provide to the parties a written decision as soon as practicable, but in no event later than ninety days after the Department's receipt of the request for administrative review.

Cite as Ga. Comp. R. & Regs. R. 511-1-4-.03
Authority: O.C.G.A. §§ 31-5-1 through 31-5-6.
History. Original Rule entitled "Procedure" adopted. F. Sep.1, 2016; eff. September 21, 2016.

Rule 511-1-4-.04. Rule Standard of Review.

Administrative review shall be limited to the written record and the issues raised by the appeal. An order, action, rule, regulation, or other decision of a County Board of Health or a division of the Department shall not be set aside on administrative review unless it is

(1) contrary to law or to the rules and regulations of the Department;

(2) unsupported by substantial evidence on the record as a whole; or

(3) unreasonable.

Cite as Ga. Comp. R. & Regs. R. 511-1-4-.04
Authority: O.C.G.A. §§ 31-5-1 through 31-5-6.
History. Original Rule entitled "Standard of Review" adopted. F. Sep.1, 2016; eff. September 21, 2016.

Chapter 511-2. DISEASE SURVEILLANCE AND CONTROL.

Subject 511-2-1. NOTIFICATION OF DISEASE.

Rule 511-2-1-.01. Definitions.

(a) "Clinical materials" means a patient specimen taken for the purpose of identifying a suspected agent of disease, a clinical isolate derived from such a specimen, nucleic acid, or other laboratory material taken or created for the purpose of identifying a suspected agent of disease.

(b) "Cluster" means an unusual aggregation of cases, real or perceived, of a disease or condition that are grouped together in time or space. A cluster will be redefined as an outbreak if a geographic or temporal excess in the expected number of cases and an association between the disease or condition and an exposure can be established.

(c) "Department" means the Georgia Department of Public Health.

(d) "Exposure" means proximity to or contact with a source of a disease agent in such a manner that effective transmission of the agent or harmful effects of the agent may occur.

(e) "Notifiable disease" means an illness, condition, or disability listed on the Department's current official roster of notifiable diseases and conditions, as it may be revised from time to time.

(f) "Outbreak" means an exposure that results in a higher number of cases of a disease or condition than would be expected within a defined community, geographical area, or time period. If the disease or condition is rare or has serious public health implications, a single case may be considered an outbreak.

(g) "Person" means any individual, firm, partnership, association, corporation, the State or any municipality or other subdivision thereof, or any other entity whether organized for profit or not.

(h) "Reporter" means a licensed physician, clinical laboratory, or the chief administrative officer or a designee thereof of a hospital, nursing home, clinic, health maintenance organization, university health service, primary health care center, or institution such as a school, day care center, mental health hospital, or detention facility.

Cite as Ga. Comp. R. & Regs. R. 511-2-1-.01
Authority: O.C.G.A. §§ 31-2A-6, 31-12-2, 31-17-2.
History. Original Rule entitled "Definitions" adopted. F. Sep. 23, 2013; eff. Oct. 13, 2013.
Amended: F. Oct. 27, 2017; eff. Nov. 16, 2017.
Amended: F. Mar. 20, 2019; eff. Apr. 19, 2019, as specified by the Agency.

Rule 511-2-1-.02. Duty to Report Notifiable Diseases and Conditions.

(1) It shall be the duty of every reporter to promptly notify the Department upon discovering an actual or suspected case of a notifiable disease. Reports may be made through the State Electronic Notifiable Disease Surveillance System (SendSS), by telephone, by letter, or by completing and transmitting forms provided by the Department.

(2) Outbreaks or unusual clusters of disease, whether infectious or noninfectious, must be reported promptly to the local county health department or to the Department.

(3) The Department shall determine which diseases and conditions require notice, and shall publish an official roster of said notifiable diseases and conditions on its website. The official roster of notifiable diseases and conditions may contain instructions requiring a reporter to forward to the Department any clinical materials found to contain an agent of a notifiable disease. Each county health department shall be responsible for making the current notifiable disease roster available to local reporters, and for providing guidance and assistance on their reporting duties.

(4) Upon special request by the Department, a reporter shall provide information or clinical materials which indicate the presence of diseases or conditions of public health significance, such as newly recognized infectious agents, antimicrobial resistant infections such as those caused by carbapenem resistant enterobacteriacae, deaths or critical illness from suspected infectious agents, alcohol/drug abuse, birth defects, cancer, heart attack, stroke, injuries, poisonings and occupational diseases.

(5) Upon special request by the Department, a reporter shall provide additional information to the Department concerning patients for whom they have submitted clinical materials, and to provide additional clinical materials when so requested for the purpose of providing complete laboratory confirmation of cases having public health importance, if the condition and circumstances of the patient permit.

(6) Clinical laboratories shall retain all reports of notifiable disease for two years from the date of the report. Clinical laboratories shall retain clinical materials containing an agent of a notifiable disease for at least one week from the date of the report, and shall send said materials to the Department for further testing upon request or as directed in the official roster of notifiable diseases and conditions.

(7) Information concerning the occurrence or probable occurrence of any notifiable disease and condition which comes to the attention of any county health department shall be promptly transmitted to the Department.

Cite as Ga. Comp. R. & Regs. R. 511-2-1-.02
Authority: O.C.G.A. §§ 31-2A-6, 31-12-2, 31-17-2.
History. Original Rule entitled "Provisions" adopted. F. Sep. 23, 2013; eff. Oct. 13, 2013.
Amended: New title "Duty to Report Notifiable Diseases and Conditions." F. Oct. 27, 2017; eff. Nov. 16, 2017.

Rule 511-2-1-.03. Confidentiality.

(a) The following records shall be deemed confidential and shall not be subject to public inspection: all reports submitted to a county health department or to the Department pursuant to this Chapter; all information requested or collected as part of an outbreak or cluster investigation, subject to the exceptions described in subparagraph (b) of this Rule; all identifiable Georgia Discharge Data System data; and all information identified as "non-public" and received from the U. S. Food and Drug Administration.

(b) When an outbreak or cluster investigation is concluded, the Department's Final Report may be made public, provided that it contains no personally identifiable data. When an outbreak or cluster investigation is expected to last more than ninety days, the Department may prepare one or more Interim Reports. Such Interim Reports may be made public, provided that they contain no personally identifiable data.

Cite as Ga. Comp. R. & Regs. R. 511-2-1-.03
Authority: O.C.G.A. §§ 31-2A-6, 31-5-5, 31-12-2, 31-17-2.
History. Original Rule entitled "Confidentiality" adopted. F. Sep. 23, 2013; eff. Oct. 13, 2013.
Amended: F. Oct. 27, 2017; eff. Nov. 16, 2017.
Amended: F. Mar. 20, 2019; eff. Apr. 19, 2019, as specified by the Agency.

Rule 511-2-1-.04. Liability.

Any person, including but not limited to practitioners of the healing arts, who in good faith submits reports or data to the Department or to a county health department pursuant to the provisions of this Chapter shall not be liable for any civil damages therefor.

Cite as Ga. Comp. R. & Regs. R. 511-2-1-.04
Authority: O.C.G.A. §§ 31-2A-6, 31-12-2, 31-17-2.
History. Original Rule entitled "Liability" adopted. F. Sep. 23, 2013; eff. Oct. 13, 2013.
Amended: F. Oct. 27, 2017; eff. Nov. 16, 2017.

Rule 511-2-1-.05. Reporting of Pediatric Asthma Deaths.

(a) It shall be the duty of every physician, coroner, and medical examiner that attends or examines the remains of a patient under the age of 18 years old in circumstances indicating that asthma was or may have been the cause of or a contributing factor to death to report that death to the Department. It is the intent of this Rule that only one report shall be made for a particular patient, and there shall be no duty to report if a complete and accurate report has already been made by another physician, coroner, or medical examiner who has examined the patient.

(b) Reports shall be made to the Department within ten days of death or examination, through an online portal set up for that purpose.

Cite as Ga. Comp. R. & Regs. R. 511-2-1-.05
Authority: O.C.G.A. §§ 31-2A-6, 31-12-2.
History. Original Rule entitled "Pilot Study for the Reporting of Pediatric Asthma Deaths" adopted. F. May 27, 2015; eff. June 16, 2015.
Amended: F. Oct. 2, 2015; eff. Oct. 22, 2015.
Amended: New title "Reporting of Pediatric Asthma Deaths." F. Mar. 20, 2019; eff. Apr. 19, 2019, as specified by the Agency.

Rule 511-2-1-.06. Reports to the Department of Community Health.

(a) When the Department receives a report of a notifiable disease or an outbreak or cluster of disease identified in a health care facility licensed or permitted by the Department of Community Health ("DCH"), it shall be the duty of the Department to notify DCH if the disease is clinically severe or is typically associated with high morbidity or mortality.

(b) The Department shall further notify DCH if a health care facility licensed or permitted by DCH fails or refuses to comply with the Department's public health recommendations.

Cite as Ga. Comp. R. & Regs. R. 511-2-1-.06
Authority: O.C.G.A. §§ 31-2A-4, 31-2A-6, 31-8-82.
History. Original Rule entitled "Reports to the Department of Community Health" adopted. F. Mar. 20, 2019; eff. Apr. 19, 2019, as specified by the Agency.

Subject 511-2-2. IMMUNIZATION OF SCHOOL CHILDREN.

Rule 511-2-2-.01. Definitions.

(a) "Childcare facility" means any public or private day center or nursery intended for the care, supervision, or instruction of children, including pre-kindergarten programs;

(b) "County Board of Health" means a county board of health organized pursuant to O.C.G.A. Section 31-3-1*et seq.*;

(c) "Department" means the Georgia Department of Public Health;

(d) "Epidemic" means an outbreak, or rise in incidence rate, or spread of incidence of a contagious or infectious disease so as to constitute a clear and present risk of infection to the public at large or to congregated groups thereof;

(e) "Physician" means a practitioner of the healing arts licensed in accord with O.C.G.A. Section 43-34-20*et seq.* or the equivalent laws of the practitioner's jurisdiction if outside Georgia;

(f) "School" means any public or private educational program or institution instructing children at any level or levels, kindergarten through twelfth grade, or children of ages five through nineteen if grade divisions are not used;

(g) "Tdap vaccine" means a single vaccine that protects against tetanus, diphtheria, and pertussis.

Cite as Ga. Comp. R. & Regs. R. 511-2-2-.01
Authority: O.C.G.A. Secs. 31-2A-6, 20-2-771, 31-12-3, 49-5-12.
History. Original Rule entitled "Definitions" adopted. F. Sep. 23, 2013; eff. Oct. 13, 2013.

Repealed: New Rule of same title adopted. F. Apr. 15, 2014; eff. May 5, 2014.
Note: Correction of non-substantive typographical error in Rule History on SOS Rules and Regulations website. "**History.** Original Rule entitled "Liability" adopted. F. Sep. 23, 2013; eff. Oct. 13, 2013." corrected to "**History.** Original Rule entitled "Definitions" adopted. F. Sep. 23, 2013; eff. Oct. 13, 2013." Effective June 12, 2019.

Rule 511-2-2-.02. Immunization Required.

(a) Except as otherwise provided, immunization against the following diseases shall be required of all children entering a school or childcare facility operating in the state:

(1) Diphtheria;

(2) Haemophilus influenzae type B (not required on or after the fifth birthday);

(3) Hepatitis A;

(4) Hepatitis B;

(5) Measles;

(6) Meningitis;

(7) Mumps;

(8) Pertussis;

(9) Pneumococcal disease (not required on or after the fifth birthday);

(10) Poliomyelitis;

(11) Rubella (German measles);

(12) Tetanus; and

(13) Varicella (chickenpox).

(b) A parent or guardian must submit a valid Certificate of Immunization for any child entering a school or childcare facility in the state of Georgia for the first time.

(c) School or childcare facility officials may allow a child without a valid certificate of immunization to attend for no more than 90 calendar days after the first day of attendance, provided that the parent or legal guardian either shows that that the child is in the process of completing required immunizations and that immunizations are being scheduled with the shortest intervals recommended in the current Official Immunization Schedules, or presents an affidavit of religious objection as provided in DPH Rule 511-2-2-.07.

(d) Effective July 1, 2014, for entrance into Georgia school grades kindergarten through twelve, students must have a total of two doses of measles vaccine, two doses of mumps vaccine, one dose of rubella vaccine and a total of two doses of varicella vaccine.

(e) Children attending any childcare facility must show evidence of protection against pneumococcal disease.

(f) Children born on or after January 1, 2006 who are attending any childcare facility or school must have proof of protection against hepatitis A disease (vaccination or serology).

(g) Requirements for hepatitis A, hepatitis B, measles, mumps, rubella, and varicella vaccines may be waived with serologic proof of immunity. Requirements for varicella vaccine may be waived also with a healthcare provider diagnosis of varicella disease or healthcare provider verification of history of varicella disease.

(h) Effective July 1, 2014, children born on or after January 1, 2002 who are attending seventh grade, and children who are new entrants into a Georgia school in grades eight through twelve, must have received one dose of Tdap vaccine.

(i) Effective July 1, 2014, children born on or after January 1, 2002 who are attending seventh grade, and children who are new entrants into a Georgia school in grades eight through twelve, must have received one dose of meningococcal conjugate vaccine.

(j) Effective July 1, 2021, children sixteen years of age and older who are attending eleventh grade must receive a booster dose of meningococcal conjugate vaccine, unless their initial dose was administered on or after their sixteenth birthday.

Cite as Ga. Comp. R. & Regs. R. 511-2-2-.02
Authority: O.C.G.A. §§ 20-2-771, 31-2A-6, 31-12-3, 49-5-12.
History. Original Rule entitled "Immunization Required" adopted. F. Sep. 20, 2013; eff. Oct. 10, 2013.
Repealed: New Rule of same title adopted. F. Apr. 15, 2014; eff. May 5, 2014.
Note: Correction of non-substantive typographical error in Rule History on SOS Rules and Regulations website. "**History.** Original Rule entitled "Purpose" adopted. F. Sep. 23, 2013; eff. Oct. 13, 2013." corrected to "**History.** Original Rule entitled "Immunization Required" adopted. F. Sep. 23, 2013; eff. Oct. 13, 2013." Effective June 12, 2019.
Amended: F. May 13, 2019; eff. June 12, 2019, as specified by the Agency.
Amended: F. June 3, 2020; eff. June 21, 2020, as specified by the Agency.

Rule 511-2-2-.03. Official Immunization Schedules.

(1) An immunization regimen equivalent to the current immunization schedule developed by the Advisory Committee on Immunization Practices (ACIP), adopted by the Department and published in the official state immunization program manual, shall be deemed the minimum regimen of immunization which satisfies the requirements of this Chapter. Immunization certified by County Boards of Health shall be accomplished in accord with the departmental immunization schedule.

(2) Any other immunization schedule which includes the immunizations itemized in Rule 511-2-2-.02, Immunizations Required, and equals or exceeds the minimum requirements of the Departmental Immunization Schedule shall be deemed to satisfy the requirement for issuance of a Certificate of Immunization.

(3) Copies of the Departmental Immunization Schedule may be obtained from the Department or County Board of Health.

Cite as Ga. Comp. R. & Regs. R. 511-2-2-.03
Authority: O.C.G.A. Secs. 31-2A-6, 20-2-771, 31-12-3, 49-5-12.
History. Original Rule entitled "Official Immunization Schedules" adopted. F. Sep. 20, 2013; eff. Oct. 10, 2013.
Repealed: New Rule of same title adopted. F. Apr. 15, 2014; eff. May 5, 2014.
Note: Correction of non-substantive typographical error in Rule History on SOS Rules and Regulations website. "**History.** Original Rule entitled "Purpose" adopted. F. Sep. 23, 2013; eff. Oct. 13, 2013." corrected to "**History.** Original Rule entitled "Official Immunization Schedules" adopted. F. Sep. 23, 2013; eff. Oct. 13, 2013." Effective June 12, 2019.

Rule 511-2-2-.04. Certificate of Immunization.

(1) A Certificate of Immunization may be issued by a physician, physician's assistant, advanced practice registered nurse, or qualified employee of a County Board of Health or the State Immunization Program, on a form provided by or approved by the Department, for any person that has been vaccinated against a specific disease in compliance with this Chapter.

(2) A Certificate of Immunization may be issued for a child who has not received all required immunizations with the conditions that the child is in the process of completing required immunizations and that immunizations are being scheduled with the shortest intervals recommended in the current Official Immunization Schedules. Such a certificate must be retained and monitored for currency by the school or childcare facility while the child continues in attendance and must be made available for inspection during normal business hours by authorized officials of the Department or County Board of Health.

(3) A certificate for a child who is in the process of receiving all required vaccines must show a date of expiration, which shall be the date on which the next required immunization is due or the date on which a medical exemption must be reviewed. A new certificate must then be obtained and submitted to the school or childcare facility within thirty days after the expiration date.

Children whose parents fail to renew said certificates within the time allotted shall not be permitted to continue in attendance.

(4) If a child transfers to another school or childcare facility, then the certificate of immunization shall be transferred to the new school or childcare facility. If a child ceases to attend without transfer, then the certificate shall be returned to the parent or guardian.

Cite as Ga. Comp. R. & Regs. R. 511-2-2-.04
Authority: 31-2A-6, 20-2-771, 31-12-3, 49-5-12.
History. Original Rule entitled "Certificate of Immunization" adopted. F. Sep. 20, 2013; eff. Oct. 10, 2013.
Repealed: New Rule of same title adopted. F. Apr. 15, 2014; eff. May 5, 2014.
Note: Correction of non-substantive typographical error in Rule History on SOS Rules and Regulations website. "**History.** Original Rule entitled "Purpose" adopted. F. Sep. 23, 2013; eff. Oct. 13, 2013." corrected to "**History.** Original Rule entitled "Certificate of Immunization" adopted. F. Sep. 23, 2013; eff. Oct. 13, 2013." Effective June 12, 2019.

Rule 511-2-2-.05. Certificate of Immunization Issued for Child with Physical Disability.

If a child has a physical disability, condition, or physiological idiosyncrasy which might cause a specific immunization to endanger life or health, then a physician may issue a Certificate of Immunization indicating "medical exemption." A Certificate of Immunization indicating medical exemption shall be valid for one year, and may be reissued from year to year until the physician determines that immunization or a specific immunization may finally be accomplished without danger to the child's health.

Cite as Ga. Comp. R. & Regs. R. 511-2-2-.05
Authority: O.C.G.A. Secs. 31-2A-6, 20-2-771, 31-12-3, 49-5-12.
History. Original Rule entitled "Certificate of Immunization Issued for Child with Physical Disability" adopted. F. Sep. 20, 2013; eff. Oct. 10, 2013.
Repealed: New Rule of same title adopted. F. Apr. 15, 2014; eff. May 5, 2014.
Note: Correction of non-substantive typographical error in Rule History on SOS Rules and Regulations website. "**History.** Original Rule entitled "Purpose" adopted. F. Sep. 23, 2013; eff. Oct. 13, 2013." corrected to "**History.** Original Rule entitled "Certificate of Immunization Issued for Child with Physical Disability" adopted. F. Sep. 23, 2013; eff. Oct. 13, 2013." Effective June 12, 2019.

Rule 511-2-2-.06. Certificate of Immunization for a Child Immunized Outside of Georgia.

A County Board of Health or physician may issue a Certificate of Immunization as provided by Rule 511-2-2-.04 upon receiving written proof attested to by a physician licensed by Georgia, a physician licensed in another state, or an authorized representative of a public health authority of another state or nation, that all required immunizations have been accomplished for the child. Such proof shall indicate each vaccine type administered and the date of each dose. A County Board of Health or physician may issue a Certificate of Immunization indicating medical exemption as provided by Rule 511-2-2-.05 upon receiving written proof attested to by a physician licensed by Georgia or another state that the child has a physical disability, condition, or physiological idiosyncrasy which might cause a specific immunization to endanger life or health.

Cite as Ga. Comp. R. & Regs. R. 511-2-2-.06
Authority: O.C.G.A. Secs. 31-2A-6, 31-14-1, 31-14-10, 31-14-12.
History. Original Rule entitled "Certificate of Immunization for a Child Immunized Outside of Georgia" adopted. F. Sep. 20, 2013; eff. Oct. 10, 2013.

Repealed: New Rule of same title adopted. F. Apr. 15, 2014; eff. May 5, 2014.
Note: Correction of non-substantive typographical error in Rule History on SOS Rules and Regulations website. "**History.** Original Rule entitled "Purpose" adopted. F. Sep. 23, 2013; eff. Oct. 13, 2013." corrected to "**History.** Original Rule entitled "Certificate of Immunization for a Child Immunized Outside of Georgia" adopted. F. Sep. 23, 2013; eff. Oct. 13, 2013." Effective June 12, 2019.

Rule 511-2-2-.07. Religious Objections to Required Immunizations.

(a) Except as provided in subsection (b) below, a child shall be exempt from the required immunizations if the parent or legal guardian has filed with the school or childcare facility a completed affidavit on DPH Form 2208.

(b) When the Department or a County Board of Health determines that an epidemic or the threat of an epidemic exists, the Department or Board shall immediately notify the governing authorities of all schools and childcare facilities within the affected area. Under those circumstances, the Department or Board may require immunization for those who object on the grounds of religious beliefs, and may prohibit attendance at schools or childcare facilities within the area by unimmunized children.

(c) Persons who wish to register a religious objection to the vaccination of their child shall do so using the following DPH Form 2208:

AFFIDAVIT OF RELIGIOUS OBJECTION TO IMMUNIZATION

[Name of parent or legal guardian] personally appeared before the undersigned notary public and swore or affirmed as follows:

1. I am the parent or legal guardian of [name of minor child], born on [date of birth].

2. I understand that the Georgia Department of Public Health requires children to obtain vaccinations against the following diseases before being admitted to a childcare facility or school: diphtheria; haemophilus influenzae type B (not required on or after the fifth birthday); hepatitis A; hepatitis B; measles; meningitis; mumps; pertussis (whooping cough); pneumococcal disease (not required on or after the fifth birthday); poliomyelitis; rubella (German measles); tetanus; and varicella (chickenpox).

3. I understand that the Georgia Department of Public Health has determined:

    a. that the required vaccinations are necessary to prevent the spread of dangerous diseases among the children and people of this State;

    b. that the required vaccinations are safe;

c. that a child who does not receive the required vaccinations is at risk of contracting those diseases; and

d. that a child who does not receive the required vaccinations is at risk of spreading these diseases to me, to other children in the childcare facility or school, and to other persons.

4. I sincerely affirm that vaccination is contrary to my religious beliefs, and that my objections to vaccination are not based solely on grounds of personal philosophy or inconvenience.

5. I understand that, notwithstanding my religious objections, my child may be excluded from childcare facilities or schools during an epidemic or threatened epidemic of any disease preventable by a vaccination required by the Georgia Department of Public Health, and that my child may be required to receive a vaccination in the event that such a disease is in epidemic stages, as provided in Georgia Code Section 31-12-3 and DPH Rule 511-9-1-.03(2)(d).

This ____ day of _____, _____.

_____

Parent or Legal Guardian

Sworn and subscribed before me this ___ day of _____, _____.

_____

Notary Public

My commission expires _____.

Cite as Ga. Comp. R. & Regs. R. 511-2-2-.07
Authority: O.C.G.A. §§ 20-2-771, 31-2A-6, 31-12-3, 49-5-12.
History. Original Rule entitled "Religious Objections to Required Immunizations" adopted. F. Sep. 20, 2013; eff. Oct. 10, 2013.
Repealed: New Rule of same title adopted. F. Apr. 15, 2014; eff. May 5, 2014.
Amended: F. May 27, 2015; eff. June 16, 2015.
Note: Correction of non-substantive typographical error in Rule History on SOS Rules and Regulations website. "**History.** Original Rule entitled "Purpose" adopted. F. Sep. 23, 2013; eff. Oct. 13, 2013." corrected to "**History.** Original Rule entitled "Religious Objections to Required Immunizations" adopted. F. Sep. 23, 2013; eff. Oct. 13, 2013." Effective June 12, 2019.
Amended: F. May 13, 2019; eff. June 12, 2019, as specified by the Agency.

Subject 511-2-3. TUBERCULOSIS CONTROL.

Rule 511-2-3-.01. Purpose.

(1) The purpose of this chapter is to prevent spread of tuberculosis and to prevent the development of new cases.

(2) The Georgia Department of Public Health or its designee (Department) has the responsibility of developing procedures to ensure that persons with suspected cases of tuberculosis receive prompt diagnostic tests and persons with confirmed cases are given written treatment plans and an adequate oral explanation thereof which, if observed, can prevent the disease from spreading and lead to the recovery of the patient.

(3) A person with pulmonary tuberculosis, and positive sputum, who refuses to take prescribed chemotherapy is a threat to the health of the community. Each time this individual coughs or sneezes, living virulent tubercle bacilli are dispersed on droplet nuclei into the area. By inhaling these virulent bacilli, any individual living or being in close contact with this diseased person over a period of time may become infected with the disease. Furthermore, any person with tuberculosis who refuses to take the full recommended course of therapy is a threat to the community due to the possibility of that person developing drug resistant tuberculosis.

Cite as Ga. Comp. R. & Regs. R. 511-2-3-.01
Authority: O.C.G.A. Secs. 31-2A-6, 31-14-1, 31-14-10, 31-14-12.
History. Original Rule entitled "Purpose" adopted. F. Sep. 20, 2013; eff. Oct. 10, 2013.

Rule 511-2-3-.02. Reporting.

(1) In-patient or out-patient treatment of a case of active tuberculosis and treatment of a suspected case with two or more anti-tuberculosis drugs shall be reported to the Epidemiology and Prevention Branch of the Department through the local county health department or its designee (LCHD). The report shall state whether the case is still under treatment, the address of the case, the clinical status, treatment of the disease, the dates and results of sputum examinations and x-rays, instances of patient noncompliance with the treatment plan and any other information required by the Department. Said reporting should be done either by the attending physician or by the designated person at a treating hospital or clinic, if any. Also laboratories shall report to the Epidemiology and Prevention Branch of the Department and the LCHD all confirmed cultures of mycobacterium tuberculosis.

(2) A physician who attends a case of active tuberculosis shall examine or cause to be examined all persons working or living in close proximity to the patient who have a significant risk of infection, and shall forward the results of said examinations to the Epidemiology and Prevention Branch of the Department and the LCHD. In the alternative, such physician may refer such persons to the LCHD for examination. An

examination required by this section shall include such tests as may be necessary to diagnose the presence of tuberculosis.

Cite as Ga. Comp. R. & Regs. R. 511-2-3-.02
Authority: O.C.G.A. Secs. 31-2A-6, 31-14-1, 31-14-10, 31-14-12.
History. Original Rule entitled "Reporting" adopted. F. Sep. 20, 2013; eff. Oct. 10, 2013.

Rule 511-2-3-.03. Duties and Responsibilities of the County Health Departments.

(1) It is the general responsibility of the LCHD to see that proper and reasonable measures are put into effect to prevent the spread of tuberculosis from any person capable of spreading it. In order to fulfill its responsibility the LCHD shall:

(a) ensure that all available tuberculosis control services are accessible to all residents;

(b) secure the prompt reporting of all diagnosed or suspected cases of tuberculosis;

(c) ensure effective treatment and continuing medical supervision of suspected and diagnosed cases of tuberculosis;

(d) ensure that contacts are identified and brought to examination, diagnostic conclusion and appropriate treatment if needed;

(e) provide for the discharge from supervision of patients whose treatment has been successfully completed; and

(f) keep each referring physician or institution informed as to the treatment of each referred patient.

(2) The LCHD shall promptly interview all reported or known persons who have a confirmed or suspected case of contagious tuberculosis.

(3) If, upon information obtained by an agent, the LCHD has reasonable cause to conclude that a person has a suspected or confirmed case of tuberculosis which needs prompt medical evaluation, the LCHD shall issue to the person a written order directing him/her to appear at a specified time and place to comply with a written plan of evaluation. The LCHD shall attach to the order a statement containing its factual basis and shall inform the person of the right to respond in writing to allegations in the statement prior to the scheduled time of the evaluation.

(4) If the person fails to submit to the planned evaluation and has not presented to the LCHD satisfactory reasons why such an evaluation is unnecessary, the LCHD may, in its discretion, file either a petition for an order of compliance or commitment.

(5) If, upon information obtained by an agent of the LCHD, the LCHD has reasonable cause to conclude that a minor may have been exposed to tuberculosis, the LCHD shall issue an order to the parent, guardian or custodian of the minor directing him/her at a specified date and place either to allow tuberculosis screening of the minor by the LCHD or to provide evidence of such screening by a licensed physician. The LCHD shall attach to the order a statement setting forth its factual basis and shall inform the parent, guardian or custodian of his/her right to respond in writing to allegations in the statement prior to the specified date of the screening, or submission of evidence thereof.

(6) If on the specified time the parent, guardian or custodian fails to submit the minor for screening and has not presented medical evidence or other written evidence that such screening is unnecessary, the Department may at its discretion file a petition for the screening of a minor in superior court.

(7) After it has identified a confirmed or suspected case of tuberculosis, the LCHD shall seek to implement a written plan of treatment which shall be explained to the patient who will be given an opportunity to consent to it in writing.

(8) The written plan of treatment shall contain a detailed description of the required cooperation of the patient and the set time schedule of any directly observed intake of prescribed drugs.

(9) The LCHD shall also explain orally and in writing to the patient the value of treatment and why drugs must be taken for the patient's recovery, control of cough, the prevention of the possible emergence of drug resistant organisms, and to prevent the spread of the disease to others.

(10) If, upon information obtained by an agent of the LCHD, the LCHD has reasonable cause to conclude that a patient is failing to comply with a plan of treatment, the LCHD shall issue a written order to the patient directing him/her to present evidence of an intention to comply with the plan of treatment by a specified date. The LCHD shall attach to the order a statement setting forth its factual basis and shall inform the person of his/her right to respond in writing to the allegations in the statement prior to the specified date.

(11) If by the specified date, the patient fails to present to the LCHD evidence that he/she has complied or intends to comply with the plan of treatment, the LCHD may in its discretion issue a quarantine order against the patient or file a judicial petition for an order of compliance or commitment. No such action, however, shall be taken against a patient who voluntarily accepts inpatient treatment recommended by the LCHD.

(12) Notwithstanding the provisions of any other regulation in this chapter, if the LCHD is unable to locate the person to be named in the petition after a good faith effort to do so, or if an imminent danger to public health exists, the LCHD may in its discretion file for a petition for commitment or compliance or issue a quarantine order without first issuing an order to the person.

(13) If a person fails to comply with a quarantine order or a judicial order, the LCHD may institute contempt, injunction, or other judicial enforcement action against the person as is authorized by law.

(14) The LCHD must notify the Director of the State Tuberculosis Control Program or his designee of the intent to initiate commitment proceedings and obtain confirmation of the availability of a bed for such patient before instituting commitment proceedings.

Cite as Ga. Comp. R. & Regs. R. 511-2-3-.03
Authority: O.C.G.A. Secs. 31-2A-6, 31-14-1, 31-14-10, 31-14-12.
History. Original Rule entitled "Duties and Responsibilities of the County Health Departments" adopted.. F. Sep. 20, 2013; eff. Oct. 10, 2013.

Rule 511-2-3-.04. Hospitalization of Committed Patients.

(1) Upon commitment by court order of the superior court, individuals with tuberculosis are to be admitted to a facility approved by the Department for the treatment of tuberculosis patients (approved TB facility).

(2) At the approved TB facility, each patient shall receive the following:

(a) a complete medical and laboratory evaluation upon admission by a licensed physician;

(b) monthly x-rays as ordered;

(c) monthly observed sputum examinations with cultures and sensitivity studies as required;

(d) orders for prescribed drug regimens in the patient's chart and signed by a licensed physician;

(e) a medical evaluation at least once a month on the need for further commitment.

1. A copy of the monthly evaluation shall be forwarded to the committing LCHD.

(3) If a committed patient's behavior becomes unmanageable, he or she may be placed in the proper detention area for further treatment and counseling. If the approved TB facility's detention facilities prove inadequate, the patient may be transferred to more secure facilities designated for the care of tuberculosis by the State TB Control Program.

(4) Acutely ill patients may be transferred to an appropriate medical center for more intensive care.

(5) While these patients are in the hospital, no leaves of absence will normally be granted except for death or critical illness in the immediate family, medical reasons, or for other good cause approved by appropriate staff.

(6) Committed patients shall not be deprived of any social or recreational privilege granted other patients unless the patient is confined to a detention area. Patients confined to a detention area shall not be permitted off-unit privileges except as approved by medical staff.

Cite as Ga. Comp. R. & Regs. R. 511-2-3-.04
Authority: O.C.G.A. Secs. 31-2A-6, 31-14-1, 31-14-10, 31-14-12.
History. Original Rule entitled "Hospitalization of Committed Patients" adopted. F. Sep. 20, 2013; eff. Oct. 10, 2013.

Rule 511-2-3-.05. Discharge of Committed Patients.

(1) The physical status of a patient shall be reviewed by the medical staff on no less than a monthly basis. If no review has taken place within the past month, the patient or his representative may request such a review. If, after such review, it is determined by the designated responsible physician at the approved TB facility or the Tuberculosis Control Program that a committed patient no longer has contagious tuberculosis or his/her discharge will not endanger the public health, he/she shall be discharged if consistent with the order of commitment.

(2) At least fifteen days prior to discharge, the LCHD or its designee must approve a suitable living environment in the community to which the patient is to be discharged.

(3) Upon discharge, the LCHD shall assume responsibility for directly observed therapy, certified sputum collections, chest x-rays and other clinical evaluations. If discharged patients are found to be noncompliant after discharge they are eligible for re-admission either as voluntary or recommitted patients.

(4) The discharging physician must notify and file notice of intent to discharge a committed person from the hospital fifteen days prior to granting a discharge with each of the following:

   (a) Director of Tuberculosis Control Program, Department of Human Resources; and

   (b) Responsible LCHD from which the individual was committed.

Cite as Ga. Comp. R. & Regs. R. 511-2-3-.05
Authority: O.C.G.A. Secs. 31-2A-6, 31-14-1, 31-14-10, 31-14-12.
History. Original Rule entitled "Discharge of Committed Patients" adopted. F. Sep. 20, 2013; eff. Oct. 10, 2013.

Rule 511-2-3-.06. Judicial Petitions.

(1) The Department has concurrent authority with LCHD to file judicial petitions for commitment, orders of compliance, or contempt.

(2) When filing a petition for commitment which asks that the person be taken into custody by the sheriff or his/her deputies prior to the judicial hearing, the LCHD, the Department or their designees shall attach to the petition either an affidavit signed by an agent which alleges that person named in the petition may abscond or conceal himself/herself and the factual basis thereof or an affidavit signed by a physician which alleges that such person is an imminent danger to the public health and the factual basis thereof.

Cite as Ga. Comp. R. & Regs. R. 511-2-3-.06
Authority: O.C.G.A. Secs. 31-2A-6, 31-14-1, 31-14-10, 31-14-12.
History. Original Rule entitled "Judicial Petitions" adopted. F. Sep. 20, 2013; eff. Oct. 10, 2013.

Subject 511-2-4. REPORTING OF VENEREAL DISEASES.

Rule 511-2-4-.01. Definitions.

Unless a different meaning is required by the context, the following terms as used in these Rules shall have the meaning hereinafter respectively ascribed to same:

(a) "Department" means the Georgia Department of Public Health.

(b) "Venereal Disease" is any case of syphilis, gonorrhea or chancroid.

(c) "Case of Venereal Disease" is any person diagnosed as having a venereal disease.

(d) "Test" is any laboratory procedure conducted for the purpose of aiding in the discovery or diagnosis of a venereal disease.

(e) "Reactive or Positive Test" means any laboratory result suggesting the presence of venereal disease.

Cite as Ga. Comp. R. & Regs. R. 511-2-4-.01
Authority: O.C.G.A. Secs. 31-2A-6, 31-12-2, 31-17-2, 31-17-4, 31-17-4.1, 31-17-4.2, 31-17-5, 31-17-6.
History. Original Rule entitled "Definitions" adopted. F. Sep. 20, 2013; eff. Oct. 10, 2013.

Rule 511-2-4-.02. Reporting of Venereal Disease.

(1) Any physician or other person who makes a diagnosis of or treats a case of venereal disease, any superintendent or manager of a hospital, dispensary, or charitable or penal

institution in which there is discovered a case of venereal disease shall report it immediately to the Department. Each such venereal disease case shall be reported to the Department by giving name, address, color, age, sex, and a diagnosis on forms furnished by the Department.

(2) All laboratories conducting tests for venereal disease shall report to the Department daily, as they occur, all reactive or positive tests for venereal disease by giving name, address, color, age and sex of patient on forms furnished by the Department.

(3) Information reported on these forms shall be kept confidential by the Department.

Cite as Ga. Comp. R. & Regs. R. 511-2-4-.02
Authority: O.C.G.A. Secs. 31-2A-6, 31-12-2, 31-17-2, 31-17-4, 31-17-4.1, 31-17-4.2, 31-17-5, 31-17-6.
History. Original Rule entitled "Reporting of Venereal Disease" adopted. F. Sep. 20, 2013; eff. Oct. 10, 2013.

Subject 511-2-5. ACQUIRED IMMUNODEFICIENCY SYNDROME (AIDS).

Rule 511-2-5-.01. Definitions.

Unless a different meaning is required by the Context, the following terms as used in this Chapter shall have the meaning hereinafter respectively ascribed to them:

(a) "Acquired Immunodeficiency Syndrome" (AIDS) is an illness characterized by one or more of the opportunistic diseases diagnosed by methods considered reliable, which are at least moderately indicative of underlying cellular immunodeficiency, and the absence of all known underlying causes of cellular immunodeficiency (other than HIV infection) and absence of all other causes of reduced resistance reported to be associated with at least one of those opportunistic diseases; or any current scientifically accepted definition as approved by the Director, Division of Public Health.

(b) "Ancillary services" means services provided after test results are given to the individual, including counseling and, if needed, repeat testing and referral to other medical support services.

(c) "Approved laboratory" means a laboratory that has been designated by the Department as an approved facility to conduct HIV testing.

(d) "Convicted of prostitution" means an individual, male or female, within the bounds of this State who has pled nolo contendere to, has pled guilty to, or has been found guilty of, prostitution in a court of this State, or in a court outside this State.

(e) "Department" means the Georgia Department of Public Health.

(f) "Health care provider" includes, but is not limited to, clinics (public and private), hospitals, or physicians.

(g) "Human Immunodeficiency Virus", hereinafter referred to as HIV, means the agents which cause AIDS.

(h) "Person" means any individual, partnership, corporation, or association and may extend and be applied to bodies politic or corporate.

(i) "Prostitute" means an individual, male or female, who performs or offers or consents to perform an act of sexual intercourse for money.

Cite as Ga. Comp. R. & Regs. R. 511-2-5-.01
Authority: O.C.G.A. Secs. 31-2A-6, 31-17-2, 31-17-3, 31-17-4.2.
History. Original Rule entitled "Definitions" adopted. F. Oct. 15, 2013; eff. Nov. 4, 2013.

Rule 511-2-5-.02. Preamble.

(1) Prevention of Perinatal Infection. The reason for voluntary HIV testing of high-risk pregnant women and women who may become pregnant is to reduce perinatal transmission of AIDS and the accompanying human suffering that could result. It is believed that HIV infection is transmitted from infected women to their fetuses or off-spring during pregnancy, labor and delivery, or perhaps shortly after birth.

(2) Mandatory Testing of Individuals Convicted of Prostitution. The reason for mandatory testing of convicted prostitutes is to develop a surveillance system to utilize this epidemiologic instrument to track the spread of HIV infection that is present in this high-risk group. Even though HIV transmission through prostitution has not been conclusively demonstrated, it is believed that contact between bisexual men and prostitutes (male and female) is a probable means of transmission of AIDS to the heterosexual population.

(3) Nonanonymous HIV Reporting. The reason for nonanonymous reporting of HIV is to describe adequately the epidemic in Georgia. Understanding the epidemiology of HIV serves as the cornerstone of public health's efforts to prevent transmission of HIV and to provide excellent care for those already infected.

Cite as Ga. Comp. R. & Regs. R. 511-2-5-.02
Authority: O.C.G.A. Secs. 31-2A-6, 31-17-2, 31-17-3, 31-17-4.2.
History. Original Rule entitled "Preamble" adopted. F. Oct. 15, 2013; eff. Nov. 4, 2013.

Rule 511-2-5-.03. Applicability of Chapter.

These rules establish a uniform statewide procedure for the Department or its authorized agent or agents or health care providers engaged in any of the following: identifying; testing; counseling; and/or providing ancillary services regarding the prevention of the transmission of the HIV agent for the following:

(a) On a voluntary basis of high risk pregnant women, and high risk individuals who might become pregnant.

(b) Mandatory testing of convicted prostitutes.

(c) The date on which the Department shall begin requiring non-anonymous confirmed positive HIV reporting.

Cite as Ga. Comp. R. & Regs. R. 511-2-5-.03
Authority: O.C.G.A. Secs. 31-2A-6, 31-17-2, 31-17-3, 31-17-4.2, 24-12-21.
History. Original Rule entitled "Applicability of Chapter" adopted. F. Oct. 15, 2013; eff. Nov. 4, 2013.

Rule 511-2-5-.04. Prevention of Perinatal Infection.

(1) Pregnant women and individuals who may become pregnant in the following groups shall be offered counseling, HIV testing, and ancillary services:

(a) Those who have evidence of HIV infection themselves, or whose offspring have evidence of HIV infection;

(b) Those who have used any drug intravenously or parenterally for nonmedical purposes since 1978;

(c) Those who were born in areas where heterosexual transmission of HIV is considered by the Department to play a major role;

(d) Those who are or have engaged in prostitution;

(e) Those who are or have been sex partners of men who have evidence of HIV infection, IV drug abusers, bisexual men, men with hemophilia, or men who were born in areas where heterosexual transmission of HIV is considered by the Department to play a major role;

(f) Those who have received blood or blood products after 1978 and prior to April, 1985; and

(g) Those who have received artificial insemination after 1978 and prior to January, 1986.

(2) If data become available to show that HIV infection is increased in other groups or settings, counseling and testing programs should be extended to include them. Routine counseling and testing of women who are not included in the above-mentioned groups is not currently recommended due to low prevalence of infection and concern about interpretation of test results in the low prevalence population. However, if a woman requests it, the service should be provided.

(3) Counseling and testing for HIV to prevent perinatal transmission are recommended in the setting of any medical service in which women at increased risk of HIV infection (as described in Paragraph (1) above) are encountered. These include, but are not limited to, clinics for services related to IV drug abuse (i.e., detoxification and methadone maintenance), hemophilia care, sexually transmitted disease, prenatal and obstetric care, family planning, infertility, gynecological, premarital, and preconceptual care. Testing for HIV should be performed with the individual's permission after counseling is provided regarding risk factors for infection, the interpretation of test results, the risks of transmission, and the possible increase of disease exacerbation among women infected with HIV in association with pregnancy. The counseling and testing must be conducted in an environment in which confidentiality can be assured.

Cite as Ga. Comp. R. & Regs. R. 511-2-5-.04
Authority: O.C.G.A. Secs. 31-2A-6, 31-17-2, 31-17-3, 31-17-4, 31-17-4.2.
History. Original Rule entitled "Prevention of Perinatal Infection" adopted. F. Oct. 15, 2013; eff. Nov. 4, 2013.

Rule 511-2-5-.05. Testing of Individuals Convicted of Prostitution.

(1) Every prostitute convicted within this State after the effective date of this Chapter shall submit to HIV testing as prescribed by the Department. Further, every individual convicted of prostitution outside this State after the effective date of this Chapter and found within this State, shall submit to HIV testing if on probation.

(2) Every clerk of a court of record in this State with jurisdiction of the offense of prostitution; every administrative head of a probation, parole or similar supervisory agency; and every administrative head of a penal institution or other detention facility shall promptly report or cause to be reported to the local Board of Health when he or she receives custody, supervision or other notice of an individual convicted of prostitution. Such report shall identify the individual by name and whereabouts, and will be used to facilitate HIV testing of the individual.

(3) Before sentencing a convicted prostitute, the courts of this State are requested to have a designated representative, appointed by the court and approved by the Department, contact the Division of Public Health of the Department. The purpose of the contact is to ascertain whether or not the prostitute has been previously found to be positive by HIV testing and such information may be taken into consideration by the judge upon sentencing.

(4) Where permitted by law, every judge sentencing a convicted prostitute in this State may include as a condition of any probation, suspension of sentence or other leniency, that the convicted individual report to the local Board of Health for HIV testing as directed. Further, where the convicted individual appears able to do so without undue hardship, every such judge is requested to order the individual to reimburse the health care provider for the cost of any testing and/or ancillary services provides.

Cite as Ga. Comp. R. & Regs. R. 511-2-5-.05
Authority: O.C.G.A. Secs. 31-2A-6, 31-17-2, 31-17-3, 31-17-4.2.
History. Original Rule entitled "Testing of Individuals Convicted of Prostitution" adopted. F. Oct. 15, 2013; eff. Nov. 4, 2013.

Rule 511-2-5-.06. Notification of Test Results.

(1) The approved laboratory for HIV testing shall report test results in writing to the Department or its designated representative, or both, as required by the Department. The Department or its designated representative shall notify the individual of test results in a manner prescribed by the Department.

(2) Test results and ancillary services shall be provided only upon the individual's presentation of the proper identification as prescribed by the Department.

Cite as Ga. Comp. R. & Regs. R. 511-2-5-.06
Authority: O.C.G.A. Secs. 31-2A-6, 31-17-2, 31-17-3, 31-17-4.2.
History. Original Rule entitled "Notification of Test Results" adopted. F. Oct. 15, 2013; eff. Nov. 4, 2013.

Rule 511-2-5-.07. Laboratories.

All laboratories shall comply with Chapter 111-8-10 "Licensure of Clinical Laboratories" of the Department of Community Health, and in addition be approved by that Department for HIV testing. The laboratories shall comply with reporting requirements as prescribed by the Department of Public Health.

Cite as Ga. Comp. R. & Regs. R. 511-2-5-.07
Authority: O.C.G.A. Secs. 31-2A-6, 31-17-2, 31-17-3, 31-17-4.2.
History. Original Rule entitled "Laboratories" adopted. F. Oct. 15, 2013; eff. Nov. 4, 2013.

Rule 511-2-5-.08. Ancillary Services.

(1) Post-Test Counseling - The results of the tests shall be discussed with the individual in a private setting during a prescheduled return visit. The individual shall be advised of the interpretation and implications of the test results and, if warranted, the need for repeat testing.

(2) Referral for Other Medical and Support Services - An individual whose test results or post-test counseling assessment indicate a need for further evaluation or support services shall be referred to the appropriate providers of such services.

Cite as Ga. Comp. R. & Regs. R. 511-2-5-.08
Authority: O.C.G.A. Secs. 31-2A-6, 31-17-2, 31-17-3, 31-17-4.2, 31-22-6.

History. Original Rule entitled "Ancillary Services" adopted. F. Oct. 15, 2013; eff. Nov. 4, 2013.

Rule 511-2-5-.09. Confidentiality.

(1) All information and records held by the Department and its authorized representatives or any other person relating to HIV infection or cases of AIDS shall be strictly confidential. Such information shall not be released or made public by the Department or its authorized representatives, or by any other person, except that release may be made under the following circumstances:

(a) When made with the consent of the individual, parent or legal guardian, as appropriate, to which the information applies;

(b) When made for statistical purposes, if the medical or epidemiologic information is summarized so that no names or other individually identifying details are revealed;

(c) When made to health care personnel, appropriate state or local agencies, or courts of appropriate jurisdiction, to carry out or enforce the provisions of this Chapter and related rules.

(2) If disclosure is made pursuant to an order of the court, such information shall be sealed and delivered directly to the requesting court. Nothing herein waives the Department's right to contest the validity of any discovery process or order, or to seek protective or limiting orders.

(3) All information given the Department pursuant to this Chapter shall be incorporated in to the Department's public health investigations, studies and reports. The Department specifically invokes its privilege to refuse to disclose the identity of any person furnishing such information, without specific authorization from the individual tested.

Cite as Ga. Comp. R. & Regs. R. 511-2-5-.09
Authority: O.C.G.A. Secs. 31-2A-6, 31-17-2, 31-17-3, 31-17-4.2, 24-12-21.
History. Original Rule entitled "Confidentiality" adopted. F. Oct. 15, 2013; eff. Nov. 4, 2013.

Rule 511-2-5-.10. Non-anonymous HIV Reporting.

Non-anonymous confirmed positive HIV tests shall be reported to the Department.

Cite as Ga. Comp. R. & Regs. R. 511-2-5-.10
Authority: O.C.G.A. Secs. 31-2A-6, 31-12-2, 31-17-2, 31-17-3, 31-17-4.2.
History. Original Rule entitled "Non-anonymous HIV Reporting" adopted. F. Oct. 15, 2013; eff. Nov. 4, 2013.

Subject 511-2-6. HANDLING AND DISPOSITION OF HUMAN REMAINS INFECTED WITH A DANGEROUS VIRUS.

Rule 511-2-6-.01. Handling of Infected Human Remains When Death Occurs in a Hospital or Medical Facility.

(1) This Chapter 511-2-6 shall govern the handling and disposal of human remains which are infected with a dangerous virus. The term "dangerous virus" includes Alkhurma, Chapare, Ebola, Marburg, or any other virus specifically designated as dangerous by the State Health Officer.

(2) The term "disinfect" as used in this Chapter shall mean to clean thoroughly with an EPA-registered hospital disinfectant with a label claim for one of the non-enveloped viruses (e.g., norovirus, rotavirus, adenovirus, or poliovirus) or, if that is not available, a solution of one part household bleach to nine parts water.

(3) The body shall be prepared for transport at the site of death by persons trained in the safe handling of infected articles and human remains, wearing appropriate personal protective equipment.

(4) After identification of the body and collection of information necessary to complete the death certificate, the body shall be prepared as follows:

(a) Any medical tubing, intravenous needles, or other devices inserted into the body during treatment shall be left in place.

(b) The body shall be placed into a leakproof body bag of at least 150 microns thickness. If the bag is not designed to be sealed through the use of adhesives, then a durable tape shall be used to securely cover the zipper. The outside of the bag shall be disinfected immediately.

(c) The body shall next be placed into a second leakproof body bag of at least 150 microns thickness. If the bag is not designed to be sealed through the use of adhesives, then a durable tape shall be used to securely cover the zipper. The outside of the bag shall be disinfected immediately.

(d) The body shall then be placed into a zipperless body bag of aluminum-impregnated material, such as the BioSeal System 5 or equivalent, which is designed to be hermetically sealed through heat-welding. The outside of the bag shall be disinfected immediately.

(e) The double-bagged body shall then be placed in a transport container suitable for cremation or a hermetically metal casket of no less than 20-gauge metal. The placement shall occur immediately outside the site of death and the casket taken directly to the transport vehicle.

(f) The transport vehicle shall take the body directly to the crematorium or burial site.

Cite as Ga. Comp. R. & Regs. R. 511-2-6-.01
Authority: O.C.G.A. §§ 31-2A-4(2), 31-2A-6.
History. Original Rule entitled "Handling of Infected Human Remains When Death Occurs in a Hospital or Medical Facility" adopted. F. Feb. 16, 2016; eff. Mar. 7, 2016.

Rule 511-2-6-.02. Disposition of Infected Human Remains.

(1) Infected human remains shall be cremated using an 8-hour cycle unless cremation is not feasible by reason of obesity, medical implants, or objection made on *bona fide* religious grounds within 24 hours of death by the person with legal right to control the disposition of the body. The cremation authorization may be signed by any representative of the Department of Public Health, County Board of Health, coroner, or medical examiner.

(2) If the body cannot be cremated, then it shall be buried in a hermetically sealed casket of no less than 20-gauge metal.

(3) The body shall not be transported out of state except with the consent of the chief public health officer of the receiving state and in coordination with the Centers for Disease Control.

(4) No autopsy or embalming shall be performed without the consent of the State Health Officer.

Cite as Ga. Comp. R. & Regs. R. 511-2-6-.02
Authority: O.C.G.A. §§ 31-2A-4(2), 31-2A-6.
History. Original Rule entitled "Disposition of Infected Human Remains" adopted. F. Feb. 16, 2016; eff. Mar. 7, 2016.

Rule 511-2-6-.03. Decontamination of Site of Death.

(1) The site of a death by a dangerous virus shall be thoroughly decontaminated in accordance with the latest guidance from the Centers for Disease Control. Until decontamination is complete, no persons shall be allowed at the site of death except persons trained in the safe handling of infected articles and human remains, wearing appropriate personal protective equipment.

(2) The body shall be removed from the site of death as provided in DPH Rule 511-2-6-.01 before decontamination of the site of death.

(3) Sharps waste shall be placed in a sturdy authorized sharps container. The sharps container and all clothes, towels, bed linens, paper, fabric, or non-durable porous materials that may have come in contact with the deceased during the period of illness shall be placed into plastic bags of 150 microns thickness or more, and the outside of the bags shall be disinfected immediately. Each bag shall then be placed into a second bag of 150 microns thickness or more, and the outside of that bag disinfected immediately.

(4) All such bags and their contents shall be either disinfected by autoclave or incinerated on the grounds of the hospital or healthcare facility, or incinerated offsite at the nearest disposal facility. If the bag is to be incinerated offsite, then it shall be secured inside a rigid container for transport as a Category A Infectious Substance in accordance with the Hazardous Materials Regulations of the U. S. Department of Transportation (49 C.F.R. Parts 171- 180.)

(5) All surfaces that may have come in contact with the deceased, or with the bodily fluids of the deceased, shall be disinfected immediately after removal of the body.

Cite as Ga. Comp. R. & Regs. R. 511-2-6-.03
Authority: O.C.G.A. §§ 31-2A-4(2), 31-2A-6.
History. Original Rule entitled "Decontamination of Site of Death" adopted. F. Feb. 16, 2016; eff. Mar. 7, 2016.

Rule 511-2-6-.04. Handling of Infected Human Remains When Death Occurs Outside of a Hospital or Medical Facility.

(1) Any person who becomes aware of a death that occurs outside of a hospital or healthcare facility, or otherwise without medical attendance, in circumstances where a diagnosis of a dangerous virus disease is possible, shall immediately notify the Director of Health Protection of the Georgia Department of Public Health or designee and the county coroner or medical examiner. "Circumstances where a diagnosis of a dangerous virus disease is possible" exist when the following occurred:

(a) the deceased came into contact with a person infected with the virus within 35 days prior to death, or the deceased visited, within 30 days prior to death, an area of the world experiencing an outbreak or epidemic of a dangerous virus disease; and

(b) the deceased experienced any of the following symptoms immediately prior to death:

1. fever of 100 degrees Fahrenheit or more;

2. diarrhea;

3. vomiting;

4. unexplained bleeding or bruising;

5. severe abdominal pain;

6. severe muscle pain or weakness;

7. severe headache.

(2) The site of death shall be immediately closed off and secured, and only persons trained in the safe handling of infected articles and human remains, using appropriate personal protective equipment, shall be permitted at the site until the completion of testing as provided in subsection (3) and (4) below. The body shall be handled in accordance with DPH Rule 511-2-6-.01(4)(a) through (d) above and shall remain on site pending the results of testing. The remaining site shall not be disturbed or handled without express permission from the Director of Health Protection of the Georgia Department of Public Health or designee. Any bed linens, clothes, towels, or other articles that came in contact with the deceased shall likewise not be disturbed or handled.

(3) A blood or tissue sample shall be taken by a person or company approved by the Department and transported directly to a laboratory for testing as directed by the Director of Health Protection of the Georgia Department of Public Health or designee.

(4) The test results shall be reported immediately to the family or property owner and to the county coroner or medical examiner. If the sample tests negative for a dangerous virus, then this Chapter shall no longer apply and the county coroner or medical examiner shall assume jurisdiction over the body and the site of death. If the sample tests positive for a dangerous virus, then the body and the site of death shall be handled in accordance with DPH Rules 511-2-6-.01 through -.03 above.

Cite as Ga. Comp. R. & Regs. R. 511-2-6-.04
Authority: O.C.G.A. §§ 31-2A-4(2), 31-2A-6.
History. Original Rule entitled "Handling of Infected Human Remains When Death Occurs Outside of a Hospital or Medical Facility" adopted. F. Feb. 16, 2016; eff. Mar. 7, 2016.

Subject 511-2-7. RABIE CONTROL.

Rule 511-2-7-.01. Rabies Prevention and Control.

(1) Each county board of health has primary responsibility for the control of rabies within its jurisdiction. In carrying out that responsibility, the county board of health should follow the current edition of the Department's "Rabies Control Manual", as it may be amended from time to time, and the current edition of the National Association of Public Health

Veterinarians' "Compendium of Animal Rabies Prevention and Control", as it may be amended from time to time.

(2) The county board of health shall take appropriate rabies management and control measures with respect to any dog, cat, or other animal that has

(a) bitten, scratched, or otherwise exposed any person to rabies; or

(b) been bitten, scratched, or otherwise exposed to rabies by another animal.

Cite as Ga. Comp. R. & Regs. R. 511-2-7-.01
Authority: O.C.G.A. § 31-2A-6.
History. Original Rule entitled "Rabies Prevention and Control" adopted. F. Jan. 22, 2018; eff. Feb. 11, 2018.

Rule 511-2-7-.02. Recommended Enforcement Measures.

Code Section 31-19-10 provides that it is a criminal misdemeanor offense to violate any rule or regulation adopted pursuant to Title 31 Chapter 19. The Department recommends that each county and municipal governing authority adopt an ordinance imposing specific penalties for the violation of any rabies order issued or rabies regulation adopted by the county board of health.

Cite as Ga. Comp. R. & Regs. R. 511-2-7-.02
Authority: O.C.G.A. § 31-2A-6.
History. Original Rule entitled "Recommended Enforcement Measures" adopted. F. Jan. 22, 2018; eff. Feb. 11, 2018.

Subject 511-2-8. EXPEDITED PARTNER THERAPY (EPT).

Rule 511-2-8-.01. Definitions.

(1) "Expedited partner therapy" or EPT means the practice of prescribing, ordering, or dispensing antibiotic drugs to the sexual partner or partners of an index patient diagnosed with chlamydia and/or gonorrhea, without a physical examination of such partner or partners.

(2) "Index patient" means a person who has been diagnosed as infected with chlamydia and/or gonorrhea, and who is not concurrently infected with syphilis or HIV.

(3) "Licensed practitioner" means any of the following persons:

(a) A physician licensed to practice medicine in this state;

(b) An advanced practice nurse or physician assistant acting pursuant to authority delegated by a licensed physician in accordance with Code Section 43-34-23 or 43-34-25 or 43-34-103(e.1); or

(c) A registered professional nurse employed by the Department, or by a county board of health.

(4) "Partner" means a person who was or may have been exposed to chlamydia and/or gonorrhea by the index patient.

Cite as Ga. Comp. R. & Regs. R. 511-2-8-.01
Authority: O.C.G.A. §§ 31-2A-6, 31-17-7.1.
History. Original Rule entitled "Definitions" adopted. F. Apr. 18, 2018; eff. May 8, 2018.
Amended: F. Aug. 22, 2022; eff. Sep. 21, 2022, as specified by the Agency.

Rule 511-2-8-.02. Expedited partner therapy authorized.

(1) A licensed practitioner with prescriptive authority may write an EPT prescription for a drug that has been determined by the Department to be appropriate for EPT treatment of chlamydia and/or gonorrhea.

(2) The current roster of drugs appropriate for EPT treatment of chlamydia and gonorrhea shall be listed in the Department's current "Expedited Partner Therapy Guidance for Healthcare Professionals" and shall also be posted on the Department's website.

Cite as Ga. Comp. R. & Regs. R. 511-2-8-.02
Authority: O.C.G.A. §§ 31-2A-6, 31-17-7.1.
History. Original Rule entitled "Expedited partner therapy authorized" adopted. F. Apr. 18, 2018; eff. May 8, 2018.
Amended: F. Aug. 22, 2022; eff. Sep. 21, 2022, as specified by the Agency.

Rule 511-2-8-.03. Prescribing EPT drugs.

(1) An EPT prescription, whether transmitted electronically, verbally, or in writing, shall contain the words "Expedited Partner Therapy" or "EPT".

(2) An EPT prescription must include the wording "Do not fill after 30 days from the date written" and shall not authorize refills.

(3) A written EPT prescription in the name of a partner may be given to the index patient for delivery to the partner.

(4) If the name of the partner or partners is unknown to the licensed practitioner, then a written EPT prescription intended for such partner or partners may be written in the name

of the index patient, and may be dispensed to the index patient for delivery to the partners.

Cite as Ga. Comp. R. & Regs. R. 511-2-8-.03
Authority: O.C.G.A. §§ 31-2A-6, 31-17-7.1.
History. Original Rule entitled "Prescribing EPT drugs" adopted. F. Apr. 18, 2018; eff. May 8, 2018.

Rule 511-2-8-.04. Ordering and dispensing EPT drugs by public health nurses.

A registered professional nurse employed by the Department, or by a county board of health, may order and dispense EPT drugs to a partner, or to an index patient for delivery to a partner.

Cite as Ga. Comp. R. & Regs. R. 511-2-8-.04
Authority: O.C.G.A. §§ 31-2A-6, 31-17-7.1.
History. Original Rule entitled "Ordering and dispensing EPT drugs by public health nurses" adopted. F. Apr. 18, 2018; eff. May 8, 2018.

Rule 511-2-8-.05. Dispensing EPT drugs.

(1) A person authorized to dispense drugs may dispense an EPT drug directly to the partner, or to an index patient for delivery to a partner.

(2) An EPT drug shall be dispensed with a written warning that contains, at a minimum, the following information:

(a) The drug should be taken as soon as possible and in accordance with the directions.

(b) The partner should consult a licensed practitioner or local health department before taking the EPT drug if the partner is already taking prescription medication, is allergic to any drug, has ever had an adverse reaction to a drug, or has a serious health condition.

(c) The partner should abstain from sexual activity until at least a week after taking the drug.

(d) The partner should seek testing after three months to ensure that the infection has been successfully treated.

Cite as Ga. Comp. R. & Regs. R. 511-2-8-.05
Authority: O.C.G.A. §§ 31-2A-6, 31-17-7.1.
History. Original Rule entitled "Dispensing EPT drugs" adopted. F. Apr. 18, 2018; eff. May 8, 2018.

Rule 511-2-8-.06. Immunity from civil and criminal liability and professional discipline.

(1) In accordance with Code Section 31-17-7.1(c), a licensed practitioner who prescribes antibiotic drugs for expedited partner therapy in accordance with Code Section 31-17-7.1 and these Rules, reasonably and in good faith, shall not be subject to civil or criminal liability and shall not be deemed to have engaged in unprofessional conduct by the Composite Medical Board or the Board of Nursing.

(2) In accordance with Code Section 31-17-7.1(d), a pharmacist who dispenses antibiotic drugs pursuant to a prescription for expedited partner therapy in accordance with Code Section 31-17-7.1 and these Rules, reasonably and in good faith, shall not be subject to civil or criminal liability and shall not be deemed to have engaged in unprofessional conduct by the State Board of Pharmacy.

Cite as Ga. Comp. R. & Regs. R. 511-2-8-.06
Authority: O.C.G.A. §§ 31-2A-6, 31-17-7.1.
History. Original Rule entitled "Immunity from civil and criminal liability and professional discipline" adopted. F. Apr. 18, 2018; eff. May 8, 2018.

Subject 511-2-9. SYRINGE SERVICES PROGRAMS.

Rule 511-2-9-.01. Definitions.

(1) **"Administrator"** means the person who signs an application for registration of a Syringe Services Program and bears the ultimate responsibility for ensuring that the Program operates in compliance with O.C.G.A. § 16-13-32 and these rules and regulations.

(2) **"Consumer"** means a person who receives assistance through a Syringe Services Program.

(3) **"Commissioner"** means the Commissioner of Public Health.

(4) **"Department"** means the Georgia Department of Public Health.

(5) **"Policies and Procedures Manual"** means a written manual detailing the policies and procedures for the safe and lawful operation of a Syringe Services Program.

(6) **"Site"** means the location(s) or venue(s) where Syringe Services Programs are offered to Consumers.

(7) **"Staff"** means a person who works for or acts as an agent of a Syringe Services Program, whether compensated or not.

(8) **"Syringe Services Program" or "Program"** means an organization which provides substance abuse and harm reduction counseling, education, and referral services for substance abuse disorder treatment; training and provision of naloxone to reverse opioid overdoses; screening for HIV, viral hepatitis, sexually transmitted diseases, and tuberculosis; referrals and linkage to HIV, viral hepatitis, sexually transmitted diseases, and tuberculosis prevention, treatment, and care services; safer injection supplies; and evidence-based interventions to reduce negative consequences of drug related behaviors.

Cite as Ga. Comp. R. & Regs. R. 511-2-9-.01
Authority: O.C.G.A. § 16-13-32.
History. Original Rule entitled "Definitions" adopted. F. July 27, 2020; eff. August 16, 2020.

Rule 511-2-9-.02. Registration Required.

(1) Any person or entity that operates a Syringe Services Program shall be registered with the Department. Applications for registration shall be filed with the Department as specified in Rule 511-2-9-.03.

(2) Upon receipt of a complete application, the Department shall review the application and take action to approve or deny the registration in accordance with the provisions of O.C.G.A. § 16-13-32 and these rules and regulations.

(3) Once issued, a registration shall be valid for a period of two years or until the biennial registration date established by the Department.

Cite as Ga. Comp. R. & Regs. R. 511-2-9-.02
Authority: O.C.G.A. § 16-13-32.
History. Original Rule entitled "Registration Required" adopted. F. July 27, 2020; eff. August 16, 2020.

Rule 511-2-9-.03. Application for Registration.

Each application for registration of a Syringe Services Program shall contain:

(1) The legal name of the Program and the name under which it will be doing business.

(2) The name, address, telephone number, and email address of the Administrator of the Program, together with:

   (a) A signed, notarized statement attesting that the Administrator accepts full responsibility for ensuring that the Program operates in compliance with the provisions of O.C.G.A. § 16-13-32 and these rules and regulations; and

(b) All information necessary for the Department to conduct a fingerprint criminal background check of the Administrator. The Applicant shall be responsible for all fees associated with the performance of the background check.

(3) The address and telephone number of each Program Site, including both fixed locations with permanent structures and venues at which services are provided by a mobile unit, as well as the name, address, and telephone number of the legal property owner for each fixed location and the Georgia tag number of each mobile unit.

(4) The scheduled hours of operation for all Program Sites, including both fixed locations and mobile units.

(5) Documentation showing that the Program has provided written notice of its intent to establish and maintain a Syringe Services Program to stakeholders in the community, including the local governing authority and the local law enforcement agencies with jurisdiction over each Program Site. The written notice shall include a copy of the Program's Site security plan.

(6) A copy of the Program's Policies and Procedures Manual.

(7) Such other information as is deemed necessary by the Department.

Cite as Ga. Comp. R. & Regs. R. 511-2-9-.03
Authority: O.C.G.A. § 16-13-32.
History. Original Rule entitled "Application for Registration" adopted. F. July 27, 2020; eff. August 16, 2020.

Rule 511-2-9-.04. Operating Requirements.

(1) Each Syringe Services Program shall:

(a) Accept and dispose of hypodermic needles and syringes at no cost to Consumers and in compliance with the U.S. Occupational Safety and Health Administration's bloodborne pathogen rule, 29 C.F.R. § 1910.1030.

(b) Furnish new hypodermic needles and syringes to Consumers at no cost and in quantities sufficient to minimize the likelihood of reuse. All new hypodermic needles and syringes shall be provided in sealed sterile packaging.

(c) Provide Consumers with direct services or referrals and linkages to care for the following: substance abuse counseling, education, and treatment; training and provision of naloxone to reverse opioid overdoses; screening, prevention, treatment, and care services for HIV, viral hepatitis, sexually transmitted diseases, and tuberculosis; and evidence based interventions to reduce negative consequences of drug related behaviors.

(d) Comply fully with the Program's Policies and Procedures Manual and all applicable federal and state laws and rules.

(e) Accept no remuneration from a Consumer.

(f) Operate only from locations of which the Department has been notified and which must be at least 1,000 feet from any school and any child care learning center licensed by the Georgia Department of Early Care and Learning.

(g) Strictly limit the disclosure of protected health information, including HIV status, in compliance with the Health Insurance Portability and Accountability Act of 1996 (HIPAA), O.C.G.A. § 24-12-21, and all other provisions of federal and state laws and rules.

(h) Ensure that all Staff are vaccinated against or immune to the hepatitis B virus, unless the individual Staff member has declined the vaccine.

(i) Ensure physical facilities are clean, sanitary, and appropriately maintained.

(j) Be overseen by an Administrator who has been approved by the Department and has accepted the responsibility of ensuring that the Program operates in compliance with O.C.G.A. § 16-13-32 and these rules and regulations.

(2) Each Program shall notify the Department via email or other writing within thirty days of any changes in:

(a) The legal name of the Program or the name under which it does business;

(b) The Program Site(s), including both fixed locations and mobile units and all contact information related thereto;

(c) The Administrator of the Program, including all contact information related thereto;

(d) The Program's operating hours; or

(e) The Program's Policies and Procedures Manual.

(3) Annually by December 1, each Program shall report the following data to the Department, in a format specified by the Department:

(a) Aggregated Consumer demographic information, including age, race, ethnicity, and gender;

(b) The number of new syringes distributed to each Consumer in each transaction;

(c) The number of used syringes returned by each Consumer in each transaction, including the number of syringes disposed of and the disposal method;

(d) The number of referrals and linkages to care made to HIV, viral hepatitis, STD, and/or tuberculosis testing, service, and treatment providers;

(e) The number of Consumers who were tested for HIV, viral hepatitis, STDs, and tuberculosis through the Program;

(f) The number of referrals made to substance abuse treatment providers;

(g) The number of needlestick injuries and splash exposures at the Program, if any, including confirmation that injured individuals received appropriate care following an incident in accordance with the Program's protocol for management of needlestick injuries and splash exposures; and

(h) Such other information as is deemed necessary by the Department.

Cite as Ga. Comp. R. & Regs. R. 511-2-9-.04
Authority: O.C.G.A. § 16-13-32.
History. Original Rule entitled "Operating Requirements" adopted. F. July 27, 2020; eff. August 16, 2020.

Rule 511-2-9-.05. Policies and Procedures Manual.

(1) Each Program shall develop a Policies and Procedures Manual for operation of a Syringe Services Program. Such Manual shall include:

(a) A protocol strictly limiting the disclosure of protected health information, including HIV status, in compliance with HIPAA, O.C.G.A. § 24-12-21, and all other provisions of federal and state laws and rules, accompanied by a protocol for handling breaches of privacy.

(b) A plan for the provision of substance abuse and harm reduction counseling, education, and referral services for:

1. Substance abuse disorder treatment;

2. Training and provision of naloxone to reverse opioid overdoses;

3. Screening for HIV, viral hepatitis, sexually transmitted diseases, and tuberculosis prevention, treatment, and care services, including immunizations;

4. Safer injection supplies; and

5. Evidence-based interventions to reduce negative consequences of drug-related behaviors.

(c) A Site biosafety plan, which shall include:

1. Engineering and work practice controls designed to reduce the likelihood of exposure by Program Staff and Consumers to bloodborne pathogens and other potentially biohazardous materials;

2. A protocol for the safe and secure disposal of syringes and related supplies in compliance with federal and state law;

3. A protocol for the management of needlestick injuries and splash exposures, which shall include the designation of an exposure manager who must be present during operating hours, a procedure for Staff to immediately report needlesticks and splash exposures, and a process for an injured individual to receive post-exposure prophylaxis or other appropriate medical care;

4. A Staff training plan, which shall include education regarding Universal Precautions, safe handling of syringes, confidentiality protocols, bloodborne pathogen infection control, and other subjects deemed necessary by the Department for the safe operation of the Program.

(d) A Site security plan, which shall be provided to all law enforcement agencies with jurisdiction over each Program Site and shall include:

1. Provisions for reasonable and adequate security of program Sites, equipment, and personnel;

2. Operational procedures to protect inventory from loss or theft and ensure the secure storage, distribution, and disposal of syringes;

3. Provisions for the regular retrieval of any syringes or other trash discarded within three hundred feet of a fixed or mobile Program Site.

(e) A plan for enlisting community support and addressing community concerns related to the implementation of the Program; and

(f) A data collection protocol for recording the information that must be reported to the Department in accordance with Rule 511-2-9-.04(3)(g).

Cite as Ga. Comp. R. & Regs. R. 511-2-9-.05
Authority: O.C.G.A. § 16-13-32.
History. Original Rule entitled "Policies and Procedures Manual" adopted. F. July 27, 2020; eff. August 16, 2020.

Rule 511-2-9-.06. Right of Inspection and Copying.

(1) Any duly designated employee of the Department shall have the right to enter upon and into the premises of a Program or Applicant at any time for the purpose of conducting a physical inspection of the Program Site. A satisfactory inspection demonstrating compliance with Rule 511-2-9-.04 shall be required prior to the issuance of an initial registration and upon each biennial renewal.

(2) The Department shall be afforded full access to, and the right to examine and copy, either manually or by photocopy, all manuals, protocols, records, reports, and other documents required to be kept by a Program under these regulations, at no expense to the Department.

Cite as Ga. Comp. R. & Regs. R. 511-2-9-.06
Authority: O.C.G.A. § 16-13-32.
History. Original Rule entitled "Right of Inspection and Copying" adopted. F. July 27, 2020; eff. August 16, 2020.

Rule 511-2-9-.07. Renewal of Registration.

(1) Each Program may renew its registration biennially by submitting a renewal application and fulfilling all requirements specified by the Department for renewal, including a physical inspection of the Program Site. Renewal applications shall be submitted to the Department not less than 120 days prior to the expiration date of the registration and shall include updated information regarding:

   (a) The legal name of the Program and the name under which it does business;

   (b) The Program Site(s), including both fixed locations and mobile units and all contact information related thereto;

   (c) The Administrator of the Program, including all contact information related thereto;

   (d) The Program's operating hours; and

   (e) The Program's Policies and Procedures Manual.

(2) A Program registration that is not renewed prior to the expiration date shall be placed in lapsed status. A lapsed registration may be renewed during the six-month period immediately following the expiration date, provided that the Program meets all requirements for renewal.

(3) A Program registration that is not renewed within the six-month late renewal period shall be expired and not eligible for renewal. To regain its registration, the Program shall be required to reapply for registration as a new applicant.

Cite as Ga. Comp. R. & Regs. R. 511-2-9-.07
Authority: O.C.G.A. § 16-13-32.
History. Original Rule entitled "Renewal of Registration" adopted. F. July 27, 2020; eff. August 16, 2020.

Rule 511-2-9-.08. Granting and Suspension or Revocation of Registration.

(1) The Department shall grant an application for registration only upon a satisfactory showing that both the Program and its Administrator are willing and able to operate in compliance with the Program's Policies and Procedures Manual and all provisions of these rules.

(2) The Department may deny an application for registration or suspend or revoke a registration, after notice and an opportunity for a hearing, upon a finding that the Applicant, Program, or Administrator has:

(a) Failed to meet all requirements for Program registration;

(b) Violated any federal or state law or rule related to Syringe Services Programs, without regard to whether such violation is criminally punishable;

(c) Knowingly made misleading, deceptive, untrue, or fraudulent representations related to the operation of a Syringe Services Program or on any document connected therewith, or made a false or deceptive statement to the Department; or

(d) Engaged in any practice harmful to the public which materially affects the ability of the Applicant, Program, or Administrator to operate a Syringe Services Program or threatens the public health, safety, or welfare.

(3) In its sole discretion, the Department may allow a Program an opportunity to correct alleged deficiencies prior to initiating the suspension or revocation of a registration, in accordance with the following procedures:

(a) The Department shall provide written notice to the Administrator, via email and first class U.S. mail to the Administrator's address on file with the Department, of the Program's alleged deficiencies. Notice shall be complete upon mailing.

(b) Within thirty calendar days of the notice, the Program shall develop and submit to the Department a written corrective action plan to address the deficiencies. The corrective action plan shall include:

(c) Steps required to correct the deficiencies; and

(d) A deadline of no more than ninety calendar days for completion.

(e) If the Department, in its sole discretion, approves the corrective action plan, the Program shall implement the plan. The Department may conduct a Site inspection

at any time during the implementation period. If the Department determines, in its sole discretion, that the deficiencies have been corrected, no further action shall be taken.

(f) If the Program fails to submit a sufficient corrective action plan, fails to correct the deficiencies as specified in the corrective action plan, or if the Department determines for any reason that a corrective action program is no longer appropriate, the Department may take action to suspend or revoke the Program's registration.

(4) Procedures for the denial of an application or suspension or revocation of a Program registration.

(a) The Department shall provide written notice to the Program's Administrator, via email and certified mail to the Administrator's address on file with the Department, of the denial of the Program's application or the suspension or revocation of the Program's registration and the grounds therefor. Notice shall be complete upon mailing.

(b) The denial, suspension, or revocation shall become effective twenty days after notice is complete, unless the Program submits a timely request for a hearing; provided, however, that a Program registration may be suspended immediately, prior to a hearing, upon a written finding set forth in the notice that the public health, safety, or welfare imperatively require emergency action. All hearing requests must be delivered to and received by the Director of the Syringe Services Program no later than thirty days after notice is complete.

(c) The Department shall refer a timely request for a hearing to the Office of State Administrative Hearings within thirty days after receipt, unless the Department and the Program agree otherwise. After thirty days from the Department's receipt of the hearing request, the Program may petition the Office of State Administrative Hearings for an order permitting the request to be filed directly with the Office of State Administrative Hearings.

(d) At least one year shall pass from the date of denial of an application before the Department will consider a new application for registration. At least two years shall pass from the date of revocation of a registration before the Department will consider a new application for registration; provided, however, that a Program whose registration was revoked for failure to renew may submit a new application prior to the expiration of the two-year waiting period.

Cite as Ga. Comp. R. & Regs. R. 511-2-9-.08
Authority: O.C.G.A. §§ 16-13-32, 31-5-2, 50-13-13, 50-13-41.
History. Original Rule entitled "Granting and Suspension or Revocation of Registration" adopted. F. July 27, 2020; eff. August 16, 2020.

Amended: F. Apr. 20, 2022; eff. May 18, 2022, as specified by the Agency.

Chapter 511-3. ENVIRONMENTAL HEALTH HAZARDS.

Subject 511-3-1. ON-SITE SEWAGE MANAGEMENT SYSTEMS.

Rule 511-3-1-.01. Applicability.

This Chapter shall apply to all on-site sewage management systems except those under the jurisdiction of and regulated by the Department of Natural Resources; any public or community sewage treatment system; and other systems subject to shared jurisdiction by Memoranda of Agreement or other agreements.

Cite as Ga. Comp. R. & Regs. R. 511-3-1-.01
Authority: O.C.G.A. Secs. 12-8-1, 31-2A-6, 31-2A-11.
History. Original Rule entitled "Applicability" adopted. F. Dec. 20, 2013; eff. Jan. 9, 2014.

Rule 511-3-1-.02. Definitions.

(a) **"Absorption Field"** means a configuration of absorption trenches installed in a portion of **land and used for the absorption and final treatment of sewage.**

(b) **"Absorption Line"** means a pipe line of perforated pipe laid in an absorption trench to serve as a conduit for sewage effluent.

(c) **"Absorption Trench"** means an excavation in which an absorption line is laid.

(d) **"Absorption Trench Bottom and Side Wall Area"** means the total interface of bottom and side soil area with undisturbed soils of all absorption trenches in an absorption field and occurring horizontally and downward from the point of distribution into the soil, expressed in square feet.

(e) **"Aggregate"** means washed gravel or washed stone meeting the Georgia Department of Transportation standards for hardness or other materials approved by the Department that shall be one half inch (1/2") to two inches (2") in diameter.

(f) **"Alternative On-Site Sewage Management System"** means an approved on-site sewage management system which differs in design or operation from the conventional or chamber septic tank system or privy.

(g) **"Approved" or "Approval"** means compliance with applicable specifications or criteria developed or accepted by the Department.

(h) **"Auxiliary System"** means a system to serve a portion of a residence, a pool house, or other adjunct facility.

(i) **"Bedroom"** means any room that is intended primarily for sleeping purposes, as shown on the building plan.

(j) **"Black Water"** means wastewater generated by fixtures or appliances that come into direct contact with human excreta or solid organic matter, such as toilets, urinals, bidets, kitchen sinks and garbage disposals.

(k) **"Building Drain"** means that part of the lowest piping of a building drainage system inside the walls of a building, which receives the discharge from soil, waste or other drainage systems and conveys the discharge to the building sewer.

(l) **"Building Sewer"** means that part of the horizontal piping of a building drainage system beyond the building drain which receives the discharge from the building drain and conveys it to a public sewer, private sewer, on-site sewage management system or other disposal.

(m) **"Central On-Site Sewage Management System"** means an on-site sewage management system serving more than one building, business, residence or other facility designed or used for human occupancy or congregation on an individual lot or single parcel of land.

(n) **"Chamber Septic Tank System" means** a septic tank with a chamber system as defined in definition (o) below.

(o) **"Chamber System"** means a system of chambers with each chamber being a molded polyolefin plastic, arch shaped, hollow structure with an exposed bottom area and solid top and louvered sidewall for infiltration of effluent into adjoining bottom and sidewall soil areas. Chambers may be of different sizes and configurations to obtain desired surface areas.

(p) **"Conventional System"** means a traditionally used system that is composed of perforated pipe surrounded by gravel or stone masking for the infiltration of effluent into adjoining bottom and side wall areas.

(q) **"Conventional Septic Tank System"** means any septic tank and conventional system as defined in (p), but does not include alternative or experimental systems.

(r) **"County Board of Health"** means a County Board of Health organized pursuant to O.C.G.A. § 31-3-1*et seq.*

(s) **"Department" or "DPH"** means the Georgia Department of Public Health.

(t) **"Distribution Device"** means a watertight structure which receives sewage effluent from a septic tank, dosing tank, or other sewage retention device and distributes it in equal portions to two or more absorption lines.

(u) **"Dosing Tank"** means an approved watertight tank, located after a septic tank or other sewage retention device, to receive and retain sewage effluent, and so equipped as to discharge sewage effluent intermittently to a distribution device, either by pump or by siphon.

(v) **"Experimental On-Site Sewage Management System"** means any on-site sewage management system proposed for testing and observation, and provisionally approved for such purposes by the Department, but which has not been fully proven under field use.

(w) **"Failure" or "failed"** meansthe on-site sewage system constitutes a health hazard by reason of inadequate treatment or disposal of sewage.

(x) **"Filter"** means an approved device that removes solids or other materials from the effluent that could cause failure of an on-site sewage management system.

(y) **"Flood Plain"** means a generally flat plain or depression susceptible to being flooded from any source, including small and intermittent water courses and coastal areas subject to intermittent tidal action.

(z) **"Gray Water"** means wastewater generated by water-using fixtures and appliances that does not come into direct contact with human excreta or solid organic matter.

(aa) **"Grease Trap"** means a device in which the grease content of sewage is intercepted and congealed, and from which grease may be skimmed or otherwise removed for proper disposal.

(bb) **"Hardscape"** means any area devoted to a landscape made up of hard wearing materials such as stone, concrete, decking and other similar construction materials.

(cc) **"Individual Water Supply System"** means a non-public system of piping, pumps, tanks or other facilities, utilizing groundwater to supply a single family dwelling.

(dd) **"Lot"** means a portion of a subdivision, or any other parcel of land, intended as a unit for transfer of ownership, or for development, or both. It does not include any part of the right-of-way of a street or road.

(ee) **"Manual for On-Site Sewage Management Systems"** means the most current version of the technical handbook adopted and periodically updated by the Department in the implementation of this Chapter.

(ff) **"Mobile Home Park"** means a parcel of land developed for subsequent rental, lease, or placement of two or more mobile homes.

(gg) **"On-Site Sewage Management System"** means a sewage management system other than a public or community sewage treatment system serving one or more buildings, mobile homes, recreational vehicles, residences, or other facilities designed or used for human occupancy or congregation. Such term shall include, without limitation, conventional and chamber septic tank systems, privies, and experimental and alternative on-site management systems which are designed to be physically incapable of a surface discharge of effluent.

(hh) **"Percolation Coefficient"** means the ratio of trench bottom area to percolation time, expressed as the allowable rate of sewage application in gallons per square foot per day.

(ii) **"Percolation Rate"** means the time, expressed in minutes per inch, required for water to seep into saturated soil at a constant rate.

(jj) **"Percolation Test"** means the method used to measure the percolation rate of water into soil as described in the *Manual for On-Site Sewage Management Systems*.

(kk) **"Person"** means any individual, partnership, corporation, association, and bodies both political and corporate.

(ll) **"Physical Development"** means the alteration or improvement of real property, including site preparation, erection of any structure or road, well construction, or installation of on-site sewage management systems.

(mm) **"Privy"** means a structure and necessary appurtenances used for the sanitary disposal or storage of human wastes without the aid of water carriage. It does not include chemical, composting, portable or incinerator toilets.

(nn) **"Public Water Supply System"** means a system for the provision of piped water to the public for human consumption, if such system has at least fifteen service connections, or regularly serves an average of at least twenty-five individuals daily, at least sixty days out of the year.

(oo) **"Septage"** means a waste that is a fluid mixture of partially treated or untreated sewage solids, liquids, and sludge of human or domestic waste, present in or pumped from septic tanks, malfunctioning on-site sewage management systems, grease traps, or privies.

(pp) **"Sewage Treatment System"** is a system that provides primary treatment and disposal, including absorption field components, devices, and appurtenances intended to be used for disposal of sewage by soil absorption. It does not include a conventional or chamber septic tank system. The system shall be designed to be physically incapable of a surface discharge of effluent.

(qq) **"Septic Tank"** means an approved watertight tank designed or used to receive sewage from a building sewer and to affect separation and organic decomposition of sewage

solids, and discharging sewage effluent to an absorption field or other management system.

(rr) **"Sewage"** means and includes human excreta, black water, water-carried wastes, and liquid household waste from residences or commercial and industrial establishments.

(ss) **"Sinkhole"** means a depression in the land surface, generally in a limestone region, which communicates or has the potential to communicate with a subterranean passage developed by solution.

(tt) **"Site"** means the location where the absorption field will be installed, to include replacement area.

(uu) **"Soil Classifier"** means a person who has been approved by the Department to conduct soil evaluations to determine suitability of a sit for an on-site sewage management system.

(vv) **"Subdivision"** means any division of a tract or parcel of land into five or more lots, building sites, mobile home sites, or other divisions, resulting in at least one single lot of less than three acres, for the purpose, whether immediate or future, of sale or legacy, and includes re-subdivision. It does not include:

1. The combination or recombination of previously platted lots or portions thereof where the total number of lots is not increased and the resultant lots conform to the standards of these rules; or

2. The division of land into parcels, all of whichare three acres or more in size with minimum width of one hundred and fifty feet (150') for a distance sufficient to provide an adequate area for the placement of structures and improvements including wells and approved installation of approved on-site sewage management systems.

(ww) **"Well"** means an excavation or opening into the ground by which groundwater is sought or obtained.

Cite as Ga. Comp. R. & Regs. R. 511-3-1-.02
Authority: O.C.G.A. Secs. 12-8-1, 31-2A-6, 31-2A-11.
History. Original Rule entitled "Definitions" adopted. F. Dec. 20, 2013; eff. Jan. 9, 2014.

Rule 511-3-1-.03. General Requirements for On-Site Sewage Management Systems.

(1) If public or community sewage treatment systems are not available, the owner of a building, residence, or property that is designed or intended for human occupancy or congregation shall provide an approved on-site sewage management system sufficient for

the number of persons normally expected to use or frequent the building, residence or other property for two hours or more.

(a) Connection shall be made to a public or community sewage treatment system if such system is available within two hundred feet (200') of the property line, or available in a public right-of-way abutting the property. If a public or community sewage treatment system is to be constructed, or an existing public or community sewer is to be extended to serve a lot, or an approved on-site sewage management system is to be used, then the building sewer shall be installed so that it will insure gravity flow at a self-cleaning velocity throughout. If an existing on-site sewage system fails, immediate connection shall be made to a public or community sewerage system if such a system is available.

(b) A residential on-site sewage systems of less than two thousand gallons per day that is failing may be exempted from connecting to sewer if the repair or replacement of the system will meet the criteria set forth in the *Manual for Onsite Sewage Management Systems* and has sufficient area and usable soils as determined by the County Board of Health.

(c) Any facility that produces a waste stream with BOD_5 (biochemical oxygen demand) and TSS (total suspended solids) higher than 200 mg/L shall be required to pretreat the waste to reduce the BOD_5 and TSS to 200 mg/L or below before disposal through a conventional or chamber septic tank system.

(2) No person may begin the physical development of a lot or structure where an on-site sewage management system will be utilized, nor install an on-site sewage management system or component thereof, without having first obtained from the County Health Department a construction permit for the installation of an onsite sewage management system.

(a) Application for such a construction permit shall be made in writing on forms provided by the County Board of Health. The County Board of Health shall approve or disapprove such application within twenty days after the receipt of a completed application. The application shall include:

1. Name and address of the owner and the applicant, if other than the owner;

2. Location of property;

3. Plans and specifications showing the location and design of the proposed on-site sewage management system, including surface and subsurface drainage and piping;

4. Nature of the facility to be served;

5. Location of all water supplies, geothermal borehole, or other utilities and trash pits on or off the lot, which will bear upon the location of the on-site sewage management system;

6. Number of bedrooms in the dwelling, or the number of persons to be served in other types of establishments, or other sewage flow or water usage data;

7. Soil characteristics, including soil types and capabilities, frequency and evaluations of seasonal high groundwater tables, occurrence of rock and other impervious strata;

8. Signature of the owner or agent applying for permit; and

9. Any additional information deemed necessary to determine the suitability of the site.

(b) The County Board of Health may waive submission of part of the information required for the application if it determines that sufficient information already is available from previously submitted subdivision or mobile home park data, or from other sources, to determine the acceptability of the proposed lot for the installation of an on-site sewage management system.

(c) Repairs, replacement, or additions to existing systems must be permitted and inspected.

(d) Any person preparing to modify a lot or structure for the purpose of obtaining a construction permit for the installation of an on-site sewage management system shall submit plans showing the type and extent of modifications. No modifications shall be carried out prior to the approval of the plans by the County Board of Health. Such approval shall be in accordance with the provisions of the Department's *Manual for On-Site Sewage Management Systems*.

(3) On-site sewage management system construction permits shall be issued only after a site inspection by the County Board of Health shows favorable findings relative to absorption rates, soil characteristics, groundwater, rock, and any other factors which would affect the acceptability of the lot. If a public water supply system is to be used, then no construction permit for an on-site sewage management system shall be issued until the public water supply system is approved.

(a) Lot suitability and approval will be determined by the criteria set forth in the *Manual for On-Site Sewage Management Systems*. Lots shall be sized according to the regulations of the County Board of Health. The County Board of Health may deny or revoke an on-site sewage management system construction permit upon finding the lot unsuitable or for failure of the applicant to comply with the

provisions of these rules. On-site sewage management construction permits shall remain valid for not more than twelve months from the date of issue.

(b) Issuance of a construction permit for an on-site sewage management system, and subsequent approval of same by representatives of the County Board of Health shall not be construed as a guarantee that such systems will function satisfactorily for a given period of time; furthermore, said representatives do not, by any action taken in affecting compliance with these rules, assume any liability for damages which are caused, or which may be caused, by the malfunction of such system.

(c) On tracts or parcels of land of three acres or more, a conventional or chamber septic tank system may be utilized if thepercolation rate does not exceed 120 minutes per inch. Percolation rates greater than 120 minutes per inch shall be considered unsuitable for these systems unless the application for the construction permit includes the results of a special study by the soil classifier and a site plan from an engineer licensed in the state which demonstrates the adsorption limitations can be overcome by design. All other conditions must comply with the requirements of the regulations for on-site sewage management systems.

(4) No person may backfill or use an on-site sewage management system until a final inspection has been made by the County Board of Health, and written approval has been issued by the County Board of Health.

(a) A copy of the final inspection report of an on-site sewage management system shall be provided to the owner, builder, developer or agent, whichever is appropriate.

(b) Grading, filling, digging trash pits or other landscaping or construction activities on the lot subsequent to final inspection by the County Board of Health which may adversely affect the on-site sewage management system shall render the approval void. Removal or alteration of system components after final inspection by the County Board of Health shall render the approval void.

(5) A conventional or chamber septic tank system must have a septic tank design capacity of no less than one thousand gallons and no greater than ten thousand gallons.

(6) If a proposed on-site sewage management system will produce a sewage flow in excess of two thousand gallons per day, then plans, specifications, soil data, and absorption test data shall be submitted to the County Board of Health for the purpose of obtaining a construction permit. This information shall bear the registration number and signature of an engineer licensed in this State. If a proposed on-site sewage management system will produce a sewage flow of two thousand gallons per day or less, then the County Board of Health may accept plans, specifications, soil data, and absorption test data from any person whom it determines to have sufficient knowledge of on-site sewage management system design.

(7) Soil evaluations shall be conducted by individuals certified by the Department as meeting the requirements set forth in the *Manual for On-Site Sewage Management Systems*. In addition, the soil classifier, engineer, geologist or other professional approved by the Department shall be required to attach to any soil evaluation submitted to the County Board of Health a copy of a current liability insurance certificate with limits of liability of no less than one million dollars.

(8) Soil evaluation reports shall be preparedin compliance with the requirements established by the Soil Survey Report Checklist in Section C of the Department's *Manual for On-Site Sewage Management System*. The county board of health shall issue on-site sewage management system permits on sites deemed suitable by soil evaluations conducted in accordance with requirements established by the checklist in Section C of the Department's *Manualfor On-Site Sewage Management Systems*. If the county board of health finds the soil evaluation is deficient, then it shall notify the person or entity that submitted the evaluation in writing by mail within 3 business days stating all deficiencies and measures needed to correct deficiencies.

(9) Engineer designs shall be prepared in accordance with the Engineered Site Plan Checklist in Section F of the Department's *Manual for On-Site Sewage Management Systems*, and shall include a copy of the engineer's current professional liability insurance certificate with limits of liability of no less than one million dollars. Engineer designs shall be evaluated within 20 days of submission and a written determination mailed to the applicant within 3 business days of the findings by the county board of health. If the permit application is denied due to rejection of the engineer design, then the County Board of Health shall so notify the submitter listing the deficiencies found, the measures needed to correct the deficiencies, and the applicant's right to appeal the decision.

(10) If an on-site sewage management system, alternative system, or soil fill installation is installed, the installer shall delivered a notice to the owner of such property stating the type of installation, design, and maintenance needs. In the case of newly constructed homes or commercial buildings, such notice must be delivered to new owner by the homebuilder or contractor at the time of conveyance of such property.

Cite as Ga. Comp. R. & Regs. R. 511-3-1-.03
Authority: O.C.G.A. Secs. 12-8-1, 31-2A-6, 31-2A-11.
History. Original Rule entitled "General Requirements for On-Site Sewage Management Systems" adopted. F. Dec. 20, 2013; eff. Jan. 9, 2014.

Rule 511-3-1-.04. Sewers.

(1) Sewers connecting component parts of on-site sewage management systems shall be of sufficient size to serve anticipated flow conditions.

(2) All solid pipes and fittings used in an on-site sewage management system, beginning at the house, shall be NSF International schedule 40 PVC or equivalent and shall be a

minimum of four inches in diameter. Sewers under driveways or similar areas of load or impact shall be of material capable of withstanding anticipated loads or installed so as to provide protection from crushing.

(3) Sewers, other than perforated pipe or drain tiles used in absorption fields, shall be laid with sealed, watertight, root-resistant joints. Such sewers shall be laid on a firm foundation, shall not be subject to settling, and shall be installed on a grade that will insure a self-cleaning velocity. Where on-site sewage management systems are used, and where installation of building drains and building sewers is not covered by duly adopted local plumbing codes, or in the absence of a local plumbing code or plumbing inspection, the County Board of Health may verify the adequacy and acceptability of all or any portion of the building sewer or the building drain.

Cite as Ga. Comp. R. & Regs. R. 511-3-1-.04
Authority: O.C.G.A. Secs. 12-8-1, 31-2A-6, 31-2A-11.
History. Original Rule entitled "Sewers" adopted. F. Dec. 20, 2013; eff. Jan. 9, 2014.

Rule 511-3-1-.05. Septic Tanks.

(1) Design and Construction. Septic tanks shall provide a minimum of 24 hours of retention and shall be designed and constructed to equal or exceed minimum design and construction criteria set forth in the *Manual for On-Site Sewage Management Systems*. Any person seeking approval of septic tanks to be used in on-site sewage management systems shall submit detailed plans and specifications for tank manufacture and other information as may be required by the Department. Manufacturers and suppliers are subject to inspection and approval by the County Board of Health or the Department. Both the inlet and outlet tees shall be ASTM 3034 rated or equivalent. In addition, an approved filter shall be installed on the outlet end of the septic tank in compliance with the *Manual for On-Site Sewage Management Systems*.

(2) Location. No septic tank shall be installed less than fifty feet (50') from existing or proposed wells, springs, sink holes, or suction water lines, and tanks shall be located downgrade from wells or springs if physically possible; less than twenty-five feet (25') from geothermal boreholes, lakes, ponds, streams, water courses, and other impoundments; less than ten feet (10') from pressure water supply lines, or less than ten feet (10') from a property line. No septic tank shall be installed less than fifteen feet (15') from a drainage ditch or embankment. Septic tanks shall be installed so as to provide ready access for necessary maintenance, and should be at least ten feet (10') from hardscape, drives, swimming pools and building foundations. The County Board of Health, after site inspection, may allow lesser separation distances or require greater distances than cited herein due to unusual conditions of topography, site configuration, subsurface soil characteristics, or groundwater interference.

(3) Capacity. The liquid capacity of septic tanks for single family dwellings shall be one thousand gallons for one, two, three or four bedrooms and 250 additional gallons for each bedroom over four. Septic tank capacity shall be increased by (50%) if a garbage grinder is to be used. Auxiliary systems serving single family residences or other facilities shall be based on the maximum daily flow.

(4) Compartmented Tanks**.** Two compartment tanks shall be required. The first compartment shall be at least 2/3 the liquid capacity of the tank.

(5) Tanks in Series. The County Board of Health may approve the installation of tanks placed in series as equivalent to a single compartmented septic tank. Tanks in series should be single compartment tanks, with the first tank being at least 1000 gallons and equal to 2/3 of the required liquid capacity. When tanks in series are used, they shall be connected with a sealed sewer line, and all sewage shall initially enter the first tank.

(6) Foundation and Backfill. Septic tanks shall be installed level on a foundation that will prevent settling. Backfill shall be placed so that a stable fill results and undue strain on the tank is avoided. Earth backfill shall be free of voids, large stones, stumps, broken masonry, or other such materials. A minimum earth cover of six inches (6") over the tank is recommended. With proper documentation the County Board of Health may approve less cover. All openings, risers, and manholes shall be constructed so as to prevent the entrance of surface water.

Cite as Ga. Comp. R. & Regs. R. 511-3-1-.05
Authority: O.C.G.A. Secs. 12-8-1, 31-2A-6, 31-2A-11.
History. Original Rule entitled "Septic Tanks" adopted. F. Dec. 20, 2013; eff. Jan. 9, 2014

Rule 511-3-1-.06. Distribution Devices and Dosing Tanks.

(1) Distribution devices shall be designed and constructed in accordance with minimum design and construction criteria set forth in the *Manual for On-Site Sewage Management Systems*.

(2) Where required, dosing tanks shall be designed, constructed, and installed in accordance with the *Manual for On-Site Sewage Management Systems*.

Cite as Ga. Comp. R. & Regs. R. 511-3-1-.06
Authority: O.C.G.A. Secs. 12-8-1, 31-2A-6, 31-2A-11.
History. Original Rule entitled "Distribution Devices and Dosing Tanks" adopted. F. Dec. 20, 2013; eff. Jan. 9, 2014.

Rule 511-3-1-.07. Absorption Fields.

(1) Absorption Area.The absorption area shall be based upon the anticipated volume of treated sewage and upon the characteristics of the soil in which absorption fields are to be located as specified in the *Manual for On-Site Sewage Management Systems*. Soil characteristics and other related data, including percolation tests, may be required by the County Board of Health. Absorption areas shall be classified as follows: aggregate, non-aggregate and other.

(2) Prior Approved Systems. Any "prior approved system" as defined in the Official Code of Georgia Annotated Section 31-2A-11(a)(4) is approved for installation according to the manufacturer's recommendation.

(3) Location. No absorption field will be constructed less than one hundred feet (100') from existing or proposed wells, springs, or sinkholes; less than ten feet (10') from water supply lines and buildings with basements and less than five feet (5') from buildings without basements, other structures, drives, hardscape, and property lines; less than fifteen feet (15') from an embankment, swimming pool foundation, drainage ditch or trash pits; not less than fifty feet (50') from geothermal boreholes and the normal water level of any impoundment, tributary, stream, or other body of water, including ponded areas of wetlands. If the water supply line crosses or comes within ten feet (10') of the absorption field, the water supply line shall be installed at least twelve inches (12") above the top of the aggregate layer of the absorption line, non-aggregate absorption line or other absorption line, and shall be encased in a single length of larger diameter water pipe. No absorption field shall be installed in areas where groundwater, soil characteristics, or adverse geological formation may interfere with the absorption or effective treatment of sewage effluent.

(4) Minimum Design and Construction for Absorption Fields. Absorption lines and absorption trenches shall be designed and installed in accordance with the minimum design and installation criteria set forth in the *Manual for On-Site Sewage Management Systems*.

Cite as Ga. Comp. R. & Regs. R. 511-3-1-.07
Authority: O.C.G.A. Secs. 12-8-1, 31-2A-6, 31-2A-11.
History. Original Rule entitled "Absorption Fields" adopted. F. Dec. 20, 2013; eff. Jan. 9, 2014

Rule 511-3-1-.08. Privies.

Privies shall be designed and constructed in accordance with minimum design and construction criteria set forth in the *Manual for On-Site Sewage Management Systems*.

Cite as Ga. Comp. R. & Regs. R. 511-3-1-.08
Authority: O.C.G.A. Secs. 12-8-1, 31-2A-6, 31-2A-11.
History. Original Rule entitled "Privies" adopted. F. Dec. 20, 2013; eff. Jan. 9, 2014.

Rule 511-3-1-.09. Alternative On-Site Sewage Management Systems.

An alternative on-site sewage management system is an on-site sewage management system which differs in design or operation from the conventional or chamber septic tank or privy, and which has been approved by the Department. Alternative on-site sewage management systems shall be designed and constructed in accordance with the minimum design and construction criteria set forth in the *Manual for On-Site Sewage Management Systems*. The Department shall maintain a list of approved alternative on-site sewage management systems.

Cite as Ga. Comp. R. & Regs. R. 511-3-1-.09
Authority: O.C.G.A. Secs. 12-8-1, 31-2A-6, 31-2A-11.
History. Original Rule entitled "Alternative On-Site Sewage Management Systems" adopted. F. Dec. 20, 2013; eff. Jan. 9, 2014.

Rule 511-3-1-.10. Experimental On-Site Sewage Management Systems.

Experimental on-site sewage management systems proposed for testing and observation may be provisionally accepted for such purposes by the Department's technical review committee, and shall be subject to limitations imposed by the Department's technical review committee.

Cite as Ga. Comp. R. & Regs. R. 511-3-1-.10
Authority: O.C.G.A. Secs. 12-8-1, 31-2A-6, 31-2A-11.
History. Original Rule entitled "Experimental On-Site Sewage Management Systems" adopted. F. Dec. 20, 2013; eff. Jan. 9, 2014.

Rule 511-3-1-.11. Septage Removal and Disposal.

(1) Permits. No person shall engage in the removal or disposal of the contents of septic tanks, pit privies, or other on-site sewage management or experimental systems without having first obtained a septage removal permit issued by the County Board of Health for such activities. The application for such septage removal permit shall be filed in the county where the business's base of operations is located, on forms provided by the Department or the County Board of Health, at least ten days prior to engaging in such activities. The application shall include the business name and address, name and address of the applicant, the manner by which such contents are to be removed, transported and given final disposal, and such other documentation as may be required by the County Board of Health, and including evidence that septage removed and transported will be accepted at approved disposal sites.

(2) Suspension, Revocation, or Denial of Renewal. The permit shall be valid for one year and must be renewed annually. The following are grounds for suspension, revocation, or denial of renewal:

    (a) A material misrepresentation or omission on an application or manifest;

(b) A pending judicial disciplinary action(s) related to on-site sewage services;

(c) A civil judgment against the individual or company related to on-site sewage services;

(d) An unfair or deceptive trade practice as defined by Code Section 10-1-393; and

(e) A violation of the Department's Rules and Regulations for On-site Sewage Management Systems or the Manual for On-Site Sewage Management Systems.

A lesser sanction, including probation on specified terms, may be imposed where the circumstances of the violation do not merit suspension or revocation of the permit.

(3) Pumping and Disposal Methods. Approved methods of pumping and disposal of septage from on-site sewage management systems shall be by direct discharge to a system approved by the Environmental Protection Division; these systems include public or community sewage treatment plants, septage handling facilities, or direct land disposal sites. Pumping and disposal shall be in accordance with the requirements of the *Manual for On-Site Sewage Management Systems*.

(4) Vehicle Identification. The name of the person or firm engaging in the removal of septage from on-site sewage management systems and the permit number shall be lettered on both sides of each vehicle used for septage removal purposes. Letters and numerals shall not be less than two inches (2") in height and shall be readily visible.

(5) Vehicle Maintenance. Every vehicle used for removal of septage from on-site sewage management systems shall be equipped with a watertight tank or body and properly maintained. Liquid wastes shall not be transported in open bodied vehicles. All pumps, hose lines, valves, and fittings shall be maintained to prevent leakage.

Cite as Ga. Comp. R. & Regs. R. 511-3-1-.11
Authority: O.C.G.A. Secs. 12-8-1, 31-2A-6, 31-2A-11.
History. Original Rule entitled "Septage Removal and Disposal" adopted. F. Dec. 20, 2013; eff. Jan. 9, 2014.
Amended: F. Dec. 7, 2015; eff. Dec. 27, 2015.

Rule 511-3-1-.12. Grease Traps.

(1) Grease traps shall be required for commercial or industrial establishments with on-site sewage management systems if the County Board of Health determines that the amount of grease introduced into the system may exceed 50 mg/l.

(2) Plans and specifications for grease traps shall be prepared in accordance with minimum design and construction criteria set forth in the *Manual for On-Site Sewage Management*

Systems and submitted to the County Board of Health for approval. Effluent from grease traps shall be disposed of in a septic tank and not directly discharged to the absorption field. Grease traps shall be located, installed and constructed so that the temperature of the sewage will be reduced to permit congealing or separation of grease and easy access for cleaning is provided.

Cite as Ga. Comp. R. & Regs. R. 511-3-1-.12
Authority: O.C.G.A. Secs. 12-8-1, 31-2A-6, 31-2A-11.
History. Original Rule entitled "Grease Traps" adopted. F. Dec. 20, 2013; eff. Jan. 9, 2014.

Rule 511-3-1-.13. Sewage Flow.

The design sewage flow of an on-site sewage management system shall be determined in accordance with the *Manual for On-Site Sewage Management Systems*. The daily sewage flow may be determined by the Department after due consideration of data submitted by the owner or his agent on design criteria. Calculations will be made on the basis of peak flow and not on long term averages.

Cite as Ga. Comp. R. & Regs. R. 511-3-1-.13
Authority: O.C.G.A. Secs. 12-8-1, 31-2A-6, 31-2A-11.
History. Original Rule entitled "Sewage Flow" adopted. F. Dec. 20, 2013; eff. Jan. 9, 2014.

Rule 511-3-1-.14. Subdivision and Mobile Home Parks.

(1) Approval. No person may sell, offer for sale, lease, rent, or begin construction or otherwise begin the physical development of a lot in a subdivision or mobile home park until written approval of plans for water supply and sewage disposal in the subdivision or park has been issued from the County Board of Health. This approval constitutes general acceptance of all lots for development with on-site sewage management systems.

(2) Pre-development Review. It is recommended that developers considering subdivision or mobile home park development where public or community sewage treatment systems will not be available seek a predevelopment review by the County Board of Health. A predevelopment report which indicates disapproval or tentative approval may be obtained by submitting a boundary plat including a vicinity map, a topographic map, and a soil map and soil descriptions based on a high intensity soil study conducted in compliance with the Department's *Manual for On-Site Sewage Management Systems*.

(3) Proposals and Plans Required. The following information is required for subdivision and mobile home park proposals:

(a) A boundary plat drawn to a reasonable scale which includes:

1. A vicinity map;

2. Proposed lots and streets including lot identification, dimensions, building lines and square footage of lots;

3. A topographic map depicted in two foot (2') contour intervals**.** Additional contour intervals may be required by the County Board of Health.

4. A soil map and soil descriptions based on a high intensity soil study, Level III, conducted in compliance with the *Manual for On-Site Sewage Management Systems*;

5. The location of all present and proposed wells, water systems, water courses, flood plains, sewage systems, structures, right-of-ways, utilities, storm water drainage systems, proposed road and street construction, grading or disturbance plans, setbacks, and easements on the property and within one hundred feet (100') outside the perimeter of the property; and

6. The name, registration number and seal of the professional surveyor or engineer that prepared the development plan.

(b) A completed Subdivision Analysis Record on forms provided by the Department.

(c) A copy of the following documents issued by the Environmental Protection Division of the Department of Natural Resources:

1. The land disturbance activity permit issued by either the Environmental Protection Division, or by a governing authority of the applicable county or municipality certified by the director of the Environmental Protection Division pursuant to the Official Code of Georgia Annotated Section 12-7-8(a); and

2. A letter of approval to begin construction of a public water supply system and approving the source of the water supply where a public water supply system is to be utilized.

(3) Water Supply.Connection to a public water supply system shall be required if available within one thousand (1,000) feet of the proposed subdivision or mobile home park.

(4) Limits on Use of On-Site Sewage Management Systems for Subdivision and Mobile Home Parks.Approval of subdivisions and mobile home parks utilizing on-site sewage management systems is subject to the following conditions:

(a) No public or community sewage system is available within five hundred feet (500') of the subdivision or mobile home park;

(b) Soil maps, descriptions, and reports compiled by a registered Soil Classifier indicate no soil conditions that would prohibit safe development of on-site sewage management systems;

(c) If a public water supply system is to be built and utilized, receipt of a letter(s) from the Environmental Protection Division approving the plans to construct the public water supply system, and approving the source of the water supply.

Cite as Ga. Comp. R. & Regs. R. 511-3-1-.14
Authority: O.C.G.A. Secs. 12-8-1, 31-2A-6, 31-2A-11.
History. Original Rule entitled "Subdivision and Mobile Home Parks" adopted. F. Dec. 20, 2013; eff. Jan. 9, 2014.

Rule 511-3-1-.15. Technical Review Committees.

(1) The Department shall appoint and maintain a Technical Review Committee consisting of no more than fifteen individuals with technical or scientific knowledge relating to on-site sewage management systems. The committee shall approve new systems, periodically review systems performance, assist the Department with the development of standards and guidelines for new technology, assist with the periodic updating of the *Manual for On-Site Sewage Management Systems*, revise the standards and serve as the authority for product approval, evaluation, and the development of installation standards. The Committee shall also maintain a list of approved systems.

(2) The Committee shall include at least one individual from the following disciplines:

(a) A DPH Environmental Health Section staff person who shall serve as the secretary;

(b) Local County Environmentalist;

(c) Health District Environmentalist;

(d) Engineering;

(e) Manufacturing;

(f) Home Builders Association;

(g) Soil Classifier;

(h) University/academia;

(i) District Health Director;

(j) Environmental Protection Division;

(k) Well Driller;

(l) Georgia On-Site Wastewater Association;

(m) Land Developer;

(n) Septic Tank Contractor.

(3) The Committee shall meet as deemed appropriate by the Department.

(4) The Department shall adopt a fee schedule for the technical review of new products and technology.

Cite as Ga. Comp. R. & Regs. R. 511-3-1-.15
Authority: O.C.G.A. Secs. 12-8-1, 31-2A-6, 31-2A-11.
History. Original Rule entitled "Technical Review Committee" adopted. F. Dec. 20, 2013; eff. Jan. 9, 2014.

Rule 511-3-1-.16. Certification of Soil Classifiers, Septic Tank Contractors, On-Site Sewage Management System Inspectors, Maintenance Personnel, and Sewage Pumpers.

(1) Individuals performing services as a soil classifier, septic tank contractor, inspection personnel, maintenance personnel, or sewage pumper must be certified by the Department.

(a) The qualifications for certification of soil classifiers, septic tank contractors, inspection personnel, maintenance personnel, and sewage pumpers shall be set forth by the Department and published in the *Manual for On-Site Sewage Management Systems*. The qualifications shall be based on education, experience, testing and performance.

(b) The Department shall publish a protocol for decertification of persons certified under the provisions of this Section in the *Manual for On-Site Sewage Management Systems*.

(c) Certification shall be renewed every two years and shall be conditioned on meeting continuing education requirements.

(2) The Department shall adopt a fee schedule for certifications and renewals under this Rule.

Cite as Ga. Comp. R. & Regs. R. 511-3-1-.16
Authority: O.C.G.A. Secs. 12-8-1, 31-2A-6, 31-2A-11.
History. Original Rule entitled "Certification of Soil Classifiers, Septic Tank Contractors, On-Site Sewage Management System Inspectors, Maintenance Personnel, and Sewage Pumpers" adopted. F. Dec. 20, 2013; eff. Jan.

9, 2014.

Rule 511-3-1-.17. Maintenance and Operation.

(1) Prohibited Discharge. No person shall allow the unapproved discharge or spillage of sewage, nor shall an on-site sewage management system be used or maintained in such a manner as to allow the seepage or discharge of effluent from such system to the ground surface, to a water course, drainage ditch, open trench, canal, storm drain or storm sewer, water well, abandoned well, lake, stream, river, estuary, groundwater, or other body of water.

(2) Maintenance. The property owner shall be responsible for properly operating and maintaining the on-site sewage management system to increase its life expectancy and prevent failure. Maintenance of the system shall be in accordance with the criteria set forth in the *Manual for On-Site Sewage Management Systems*.

(3) Additives**.** No strong bases, acids, or organic solvents shall be used in the operation of an on-site sewage management system.

(4) Existing System Evaluations. If a performance evaluation of an existing system is conducted, the evaluation shall be performed in accordance with the procedure set forth in the *Manual for On-Site Sewage Management Systems*.

(5) Abandonment of a Septic Tank. If the use of a septic tank is discontinued, or if the tank cannot be made to comply with the Rules and its further use is prohibited, then the property owner shall either have the abandoned tank pumped out by a certified pumper and fill the empty tank with sand, soil, or rock to prevent entrapment, or have the empty tank removed to make room for a new system component.

(6) Variances. The County Board of Health may grant variances in the cases of hardship where existing systems are malfunctioning.

Cite as Ga. Comp. R. & Regs. R. 511-3-1-.17
Authority: O.C.G.A. Secs. 12-8-1, 31-2A-6, 31-2A-11.
History. Original Rule entitled "Maintenance and Operation" adopted. F. Dec. 20, 2013; eff. Jan. 9, 2014.

Rule 511-3-1-.18. Standards for Non-Conventional On-Site Sewage Management Systems.

(1) The Department shall review absorption field products that differ in design from the conventional on-site sewage management system. The following standards will be used to determine equivalency to the conventional on-site sewage management system:

(a) The design infiltrative surface is the wetted trench bottom area.

(b) Due to the combined effects of compaction, contact area and fines associated with gravel aggregate, the effective infiltrative surface area shall be reduced by an estimated 50%.

(c) The minimum amount of effective trench bottom infiltrative surface area per linear foot shall be equivalent to the conventional 36-inch wide gravel system.

(d) Sidewall area shall not be considered for design reduction. The minimum amount of effective sidewall infiltrative surface area per linear foot shall be equivalent to a conventional 36-inch wide gravel system.

(e) The minimum storage volume required for a system shall be equivalent to a conventional 36-inch wide gravel system.

(f) The design absorption area required is based on the most hydraulically limiting soil horizon that comes into contact with the infiltrative surface of the sidewall, trench bottom, and for a distance 1 foot below the absorption trench bottom.

(2) The infiltration area for conventional 36-inch wide gravel trench absorption shall be considered to be as follows:

(a) Sidewall Infiltration Area: 2 sq. ft./ft x .50 = 1 sq.ft. / linear foot

(b) Trench Bottom Infiltration Area: 3 sq. ft./ft x .50 = 1.5 sq.ft. / linear foot

(c) Storage Volume: 3 cubic feet / linear foot x 7.48 gallons / cubic foot x .35 = 7.85 gallons / linear foot

(3) Lots approved for development based on a reduction in absorption trench length up to 50% shall continued to be approved and permitted for up to a 50% reduction in absorption trench length provided the lot is part of a recorded plat or part of a preliminary development plan submitted to the County Board of Health within one year of the April 1, 2007 rule adoption. Preliminary plans must include proposed lots and streets with lot identifications, lot dimensions, and square footage; a topographic map with water courses and flood plain identified; a level 3 soil report; the location of the water supply system, right-of-ways, easements and utilities; and the name, registration number and seal of the professional surveyor or engineer.

Cite as Ga. Comp. R. & Regs. R. 511-3-1-.18
Authority: O.C.G.A. Secs. 12-8-1, 31-2A-6, 31-2A-11.
History. Original Rule entitled "Standards for Non-Conventional On-Site Sewage Management Systems" adopted. F. Dec. 20, 2013; eff. Jan. 9, 2014.

Rule 511-3-1-.19. Decertification and Denial of Renewal.

(1) The Department may revoke the certification of any person or entity under this Chapter, or may deny certification, for any of the following reasons:

(a) A violation of Title 31 of the Official Code of Georgia or the Rules of this Department;

(b) An unfair or deceptive trade practice as defined by Code Section 10-1-393;

(c) Performing services for which a certification is required if, at the time of the service, the person or entity lacks a current certification;

(d) A material misrepresentation or omission on any application for certification or renewal;

(e) A criminal conviction, including a plea of nolo contendere, for any felony, crime of moral turpitude, or offense related to on-site sewage services;

(f) Failure to pay certification or renewal fees;

(g) Failure to maintain continuing education credits required by the Department;

(h) A civil judgment based on conduct related to on-site sewage services; or

(i) Such other conduct as, in the opinion of the Department, would render continued certification of the person or entity a threat to the health or safety of the public.

(2) The Department may, in its discretion, impose a lesser sanction where the circumstances of the violation do not merit revocation of the certification, including suspension or probation on specified terms.

(3) Procedure.

(a) The Department may, but is not required to, refer information concerning a certified person or entity to the Certification Review Committee. The Committee shall review the evidence and make a recommendation to the Department.

(b) The Department shall give written notice of any disciplinary action taken pursuant to this regulation by certified mail or statutory overnight delivery to the last known address of the person or entity. The notice shall set forth the facts which support disciplinary action.

(c) Upon request made in writing and received by the DPH Office of General Counsel no later than twenty days after the written notice of disciplinary action is mailed, the Department shall refer the matter to the Georgia Office of State Administrative

Hearings for hearing in accordance with its rules. The burden of proof shall be on the person or entity seeking the hearing.

(4) Effective date of disciplinary action.

(a) All disciplinary actions by the department are effective twenty days after the certified person's receipt of the notice, unless otherwise specified in the notice, or unless the certified person makes a timely request for a hearing.

(b) Upon a written finding set forth in the notice of disciplinary action that the public safety, heath, and welfare imperatively require emergency action, the suspension of the certification shall be effective immediately upon issuance of the notice.

(5) Upon request for exculpatory, favorable, or arguably favorable information relative to pending allegations involving disciplinary action, the Department shall either furnish such information, indicate that no such information exists, or provide such information to the hearing officer for *in camera* inspection pursuant to O.C.G.A. § 50-13-18(d)(2).

Cite as Ga. Comp. R. & Regs. R. 511-3-1-.19
Authority: O.C.G.A. Secs. 12-8-1, 31-2A-6, 31-2A-11.
History. Original Rule entitled "Decertification and Denial of Renewal" adopted. F. Dec. 7, 2015; eff. Dec. 27, 2015.

Subject 511-3-2. MASS GATHERINGS.

Rule 511-3-2-.01. Definitions.

For the purpose of these rules, the term:

(a) "Adequate" means equal to what is required, suitable to the case or occasion, fully sufficient, proportionate, satisfactory;

(b) "Approved" or "approval" means accepted or acceptable by the Department in accordance with applicable regulations;

(c) "Chemical Privy" means a structure and necessary appurtenances for the sanitary disposal or storage of human wastes without the aid of water carriage and which relies upon a chemical such as caustic soda to disintegrate the excreta;

(d) "Department" means the Georgia Department of Public Health;

(e) "Drinking Water" means water provided or used for human consumption or for lavatory or culinary purposes;

(f) "Food Service Establishment" means and includes establishments for the preparation and serving of meals, lunches, short orders, sandwiches, frozen desserts, or other edible products. The term includes but is not limited to restaurants; coffee shops; cafeterias; short order cafes; luncheonettes; taverns; lunch rooms; places manufacturing, wholesaling, or retailing sandwiches or salads; soda fountains; institutions; both public and private; food carts; itinerant restaurants; industrial cafeterias; catering establishments; food vending machines and vehicles and operations connected therewith; and similar facilities by whatever name called;

(g) "Health Authority" means the Georgia Department of Public Health or a County Board of Health;

(h) "Individual Sewage Disposal System" means a sewage disposal system, other than a public or community sewage disposal system, serving a single building, residence or other facility designed or used for human occupancy or congregation. Included within the scope of this definition are septic tank systems and privies;

(i) "Mass Gathering" means any event likely to attract five thousand (5,000) or more persons and to continue for fifteen (15) consecutive or more hours;

(j) "Permit" means written authorization to a person by the Health Authority to operate a mass gathering;

(k) "Person" means the State or any agency or institution therof, any municipality, political subdivision, public or private corporation, individual, partnership, association, or other entity, and includes any officer or governing or managing body of any municipality, political subdivision, or public or private corporation;

(l) "Privy" means a structure and necessary appurtenances for the sanitary disposal or storage of human wastes without the aid of water carriage. Included in the scope of the definition are pit privies, vault privies, chemical privies, pit-type latrines, portable toilets, and other facilities that may be approved by the Department;

(m) "Public or Community Sewerage System" means any sewage treatment works, pipe lines or conduits, pumping stations and force mains and all other constructions, devices, and appliances appurtenant thereto, designed for treating or conducting sewage for ultimate disposal into lakes, streams, or other bodies of surface water;

(n) "Public or Community Water Supply System" means any water supply system regardless of ownership or operation, serving or intended to serve water for domestic use of human consumption to the public or any segment therof, except an individual water supply system serving a single family dwelling. They are classified as follows:

1. Class I. Water Supply Systems supplying water from any surface water sources;

2. Class II. Water Supply Systems supplying finished water from ground water sources to more than twenty-five (25) housing units or mobile units, to schools, to

State owned facilities, and to industrial operations employing more than one hundred (100) persons;

3. Class III. All other water supply systems supplying finished water from ground water sources, including but not limited to, tourist accommodations, food service establishments, and commercial establishments.

(o) "Public Swimming Pool" means any swimming pool, other than a private residential swimming pool, for collective use by numbers of persons for swimming or bathing, operated by any person, whether he be owner, operator, lessee, licensee, or concessionaire, regardless of whether a fee is charged, and all facilities incident thereto;

(p) "Sewage" means human, domestic, or animal wastes from residences, building, commercial and industrial establishments, institutions, and other structures and shall include bath and toilet wastes, laundry wastes, kitchen wastes and other similar wastes together with water or other liquid wastes that may be present;

(q) "Sewage Disposal System" means any system, whether publicly or privately owned, used for the collection and disposal of sewage;

(r) "Solid Waste" means putrescible and non-putrescible wastes, except human body wastes, and shall include garbage, rubbish (paper, cartons, boxes, wood, tin, tree branches, yard trimmings, furniture and appliances, metals, tin cans, glass, crockery, or dunnage), ashes, refuse, dead animals, industrial wastes (waste materials generated in industrial operations), residue from incineration, food processing wastes, demolition wastes, construction wastes, and any other waste material in a solid or semi-solid state, not otherwise defined.

Cite as Ga. Comp. R. & Regs. R. 511-3-2-.01
Authority: O.C.G.A. Secs. 31-2A-6, 31-27-9.
History. Original Rule entitled "Definitions" adopted. F. Sep. 20, 2013; eff. Oct. 10, 2013.

Rule 511-3-2-.02. General Provisions.

(1) No person shall hold a mass gathering in a location that could constitute an imminent health or safety hazard to persons attending the mass gathering, as may be determined by the Department. No person shall hold or promote, by advertising or otherwise a mass gathering unless he has complied with the permit and application requirements of these rules.

(a) Any person receiving a permit to hold a mass gathering shall have installed all facilities and made such facilities operational, and shall have completed and made ready all services and activities, as provided by law and these rules, not less than 48 hours before the first day of the mass gathering.

(b) Any person applying for a permit to promote or hold a mass gathering shall furnish to the Department such written evidence in the form of contractual agreements, affidavits, plans, reports, specifications, or other legal or technical documents as may be required by the Department to insure that the law and these rules have been or will be complied with before a permit to promote or hold a mass gathering is issued.

(c) A person to whom a permit has been issued to promote or hold a mass gathering, shall notify the Department within forty-eight hours of the time of a postponement or cancellation of a mass gathering and the steps that will be taken to insure that such mass gathering will not be held as scheduled.

(d) A person to whom a permit has been issued shall keep the permit on file and make it available at all times for review by any governmental authority.

(2) Requirements for security; documentary evidence must be submitted for a security force employed by the promoters and/or holders of mass gatherings in the ratio of one security officer per five hundred persons in attendance at the proposed mass gathering.

(3) Failure of any person to comply with the law and these rules shall be prima facie evidence for the Department to deny, suspend, or revoke the permit after written notice of violation and opportunity for hearing.

Cite as Ga. Comp. R. & Regs. R. 511-3-2-.02
Authority: O.C.G.A. Secs. 31-2A-6, 31-27-9.
History. Original Rule entitled "General Provisions" adopted. F. Sep. 20, 2013; eff. Oct. 10, 2013.

Rule 511-3-2-.03. Facilities, Services and Activities to be Provided and Maintained at Site of Mass Gathering.

Any person promoting or holding a mass gathering shall provide and maintain at the site of the mass gathering, facilities, services, and activities as follows:

(a) A network of interior roads, kept clear at all times, for service and emergency vehicles. The network of interior roads shall be connected with access roads which will permit flow of traffic and insure the free passage of emergency vehicles;

(b) Traffic Control measures that will preclude hazards to vehicular and pedestrian traffic;

(c) Adequate parking facilities off public roadways shall be provided to serve all reasonable anticipated requirements at a rate of not more than 100 passenger cars per acre or 30 buses per acre;

(d) Adequately graded and drained site, not subject to flooding, and located where drainage will not damage private or public water supply;

(e) Grounds maintained in a condition free of accumulation of litter and debris;

(f) Signs conspicuously posted locating all facilities;

(g) All open areas of the site with illumination of at least 0.5 horizontal foot candle (lumens per square foot). Lighting shall be controlled so as not to reflect on any area beyond the boundary of said site;

(h) At least 50 square feet per person on the site of mass gathering;

(i) A water supply system which shall be constructed, operated and maintained in accordance with the Rules of the Department of Natural Resources entitled "Water Quality Control," Chapter 291-3-6, and the rules of this Department entitled "Drinking Water Supply," 511-3-3. In addition, the following provisions shall apply:

1. Drinking water supply shall be capable of delivering at least three (3) gallons of water per person per day, obtained from a source approved by the Department and shall be made readily available to persons attending the mass gathering;

2. Drinking water fountains or outlets shall be of a type and installation acceptable to the Department. Provision shall be made for the disposition of the waste water in a manner not to create a nuisance or public health hazard;

3. Cross connections between drinking water and other waters shall be prohibited;

4. Multi-use or shared drinking utensils shall not be provided;

5. Single service paper or plastic cups made available to persons attending the mass gathering by persons operating a food service establishment shall be used only once and then shall be discarded;

6. Ice shall be manufactured, handled, and stored in a manner satisfactory to the Department;

7. Drinking water outlets shall be protected against backsiphonage.

(j) A sewage disposal system connected to a public or community sewerage system or provide and maintain in accordance with Rules of the Department entitled "Individual Sewage Disposal Systems," Chapter 511-3-1. In addition, the following provisions shall apply:

1. Toilet facilities, separate for each sex, shall be provided at a rate of one toilet fixture for every 100 persons;

2. Toilet facilities shall be conveniently located and shall be constructed and maintained in a manner that they will not be offensive;

3. Privies shall be located and constructed in a manner that they will not, by leakage and seepage, constitute a source of possible contamination to a water supply, surface water, or adjacent ground surface and shall be constructed and maintained in accordance with the requirements of the Department;

4. Chemical toilets may be used in lieu of privies when authorized by the Department, due to adverse conditions that conflict with subparagraph 3 above. Chemical toilets shall be routinely inspected and maintained by qualified personnel by the applicant;

5. When permanent toilet facilities are provided, the following provisions shall apply:

   (i) Lavatory facilities shall be provided in addition to toilet facilities at a rate of one (1) lavatory for every 100 persons;

   (ii) Connection shall be made to a public or community sewerage system when such connection is available within 500 feet of the proposed mass gathering site; written authorization to connect to such sewerage system shall be obtained from the Department.

6. Where an effluent to a sewage disposal system is designed to discharge into a stream, lake or other bodies of ground or surface waters, plans and specifications shall be submitted to the Georgia Water Quality Control Board for approval before construction begins.

(k) A solid waste collection and disposal system shall be operated in accordance with Rules of the Department entitled "Solid Waste," Chapter 511-3-4. In addition, the following provisions shall apply:

1. Containers which are flytight and watertight shall be provided for the disposal of solid wastes. These containers shall be secured in such a manner as to prevent their being easily turned over or misplaced. All containers shall be emptied at least once a day and as often as is necessary to maintain sanitary conditions;

2. Containers for the storage of solid wastes shall be conveniently located and shall be in sufficient numbers to hold 1 1/2 ft.3 of refuse per person per day;

3. The disposal of solid wastes shall be at sites and by methods approved by the Department. If an incinerator is utilized, it shall meet all requirements of the Rules and Regulations of the Department of Natural Resources.

4. Open burning is prohibited except as provided in the Rules of the Department of Natural Resources entitled "Air Quality Control", Chapter 391-3-1;

5. All solid waste material shall be removed from the mass gathering site within five days after date of the termination of the mass gathering.

(l) Sleeping areas and facilities provided for the public accommodation of people attending mass gathering shall be constructed and maintained in accordance with Rules of the Department entitled "Tourist Accommodations", Chapter 511-6-2;

1. When sleeping facilities are provided, the following shall apply:

   (i) A minimum of 40 square feet per person for single bunks and 30 square feet per person when double-deck bunks are used. A minimum ceiling height of seven feet shall be provided;

   (ii) Lighting shall be adequate to illuminate the entrances and interiors of structures;

   (iii) Ventilation of all sleeping quarters shall be such that the open window area is equal to or greater than 20 percent of the floor area;

   (iv) Heaters and cooking facilities shall be properly vented and maintained so that gaseous products of combustion do not escape into the room.

(m) Fire protection, as follows:

1. Install and maintain stoves or other sources of heat in a manner so as to avoid both a fire hazard and a dangerous concentration of fumes or gas and in accordance with Rules of the Department entitled "Tourist Accommodation", Chapter 511-6-2;

2. Tents and tarpaulins used at mass gatherings shall meet the requirements for resistance to fire prescribed in the Standard for Flame-Resistant Textiles and Films, National Fire Protection Association No. 701, 1966;

3. The area enclosed by any tent and for at least 10 feet outside of such structure shall be cleared of all flammable materials and vegetation which will spread fire. The premises shall be kept free of such flammable materials during the period for which the premises are used by the public. Ten pound fire extinguishers which are designed for Class A, B, C fires as classified by the National Fire Protection Association shall be provided and located in conspicuous places so that there is one fire extinguisher for every 3,000 square feet and the travel distance is not greater than 75 feet;

4. Spaces underneath grandstands shall be kept free of extraneous materials and shall not be occupied for other than protective or exit purposes unless exempted in writing by the Department;

5. Flammable, volatile, or otherwise harmful liquids or materials including pesticides and toxic chemicals shall be stored in areas other than where people sleep or congregate; a ten pound ABC type fire extinguisher shall be provided within 50 feet of said storage area;

6. Liquified petroleum appliances shall comply with the requirements of the "Liquified Petroleum Safety Act of Georgia" (Ga. Laws 1949, p. 1128 *et seq.* as amended);

7. At least one person who has training in fire and panic control shall be provided for every 2,500 persons attending the mass gathering. These persons shall be assigned to strategic locations on the premises and within 50 feet from a fire extinguisher in order to watch for fire hazards;

8. At least one tanker-type fire truck having a capacity of 1,000 gallons or more and one standard pumper-type fire truck together with an adequately trained crew familiar with the operations of the fire fighting equipment provided on the site in fighting fires shall be provided on the premises at all times;

9. A building in which people sleep or eat shall be provided with ready exit in case of fire. If sleeping quarters are provided above the ground floor, at least two exits shall be provided from floors above the ground floor;

10. Fire extinguishers shall be provided in the ratio of one per 2,500 people in attendance at the mass gatherings. These extinguishers shall be strategically located throughout the area as provided in the Life Safety Code and Portable Fire Extinguishers of the National Fire Protection Association.

(n) Medical Services shall be provided to include but not be limited to the following:

1. Adequate physicians, nurses, and support personnel, equipment and supplies, depending upon the number attending, and the characteristics of the attendees. As minimum there shall be one physician and two nurses per 5,000 attendees up to 100,000 and one physician and two nurses for each additional 10,000. The promoter shall designate one physician as professionally responsible for the overall emergency medical services. He shall prepare the medical plan, and determine:

   (i) the required number and location of first-aid stations,

   (ii) the number of first-aid stations capable of holding patients up to twelve hours before evacuation,

   (iii) the required number and planned distribution of ambulances,

   (iv) an evacuation plan with a commitment in writing for backup hospital services with provision of adequate communications,

(v) a detailed list of names and addresses of each medical doctor, nurse, etc., who will agree to perform services; and the hours and dates on which they have agreed to work, and

(vi) helicopter arrangements; landing pad area; pilot's name and address shall be provided when it has been determined by the Department that the evacuation plan is inadequate to protect persons attending the mass gathering;

2. Two patient beds shall be provided for each 1,000 attendants at the mass gathering. Patient beds shall be located in suitable first aid stations and shall be in place for inspection forty-eight hours prior to the scheduled mass gathering.

3. Additional medical services shall be provided as the Department may consider necessary after reviewing the applicant's plan for emergency situations as provided in O.C.G.A, Section 31-27-4(a)(6) in order to provide adequate protection of the health of persons attending the mass gathering.

(o) Where public swimming pools are provided they shall be constructed, operated and maintained in accordance with the Rules of the Department entitled "Swimming Pools and Recreational Water Parks", Chapter 511-3-5;

(p) The sound level measured at the boundaries of the mass gathering site shall be in compliance with the following noise exposure criteria:

Duration per Day (hours)	Sound Level (dBA)
8	90
6	92
4	95
3	97
2	100
1-1/2	102
1	105
1/2	110
1/4 or less	115

1. Exposure to impulsive or impact noise shall not exceed 140 dB peak sound pressure level;

2. When daily noise exposure is composed of two or more periods of noise exposure of different levels, the combined effect shall be considered rather than the individual effect of each. If the sum of the following fractions:

C[1]/T[1] + C[2]/T[2] + C[n]/T[n]

exceeds unity, then the noise exposure shall be considered to exceed the limit value. C[n] indicates the total time of exposure at a specified noise level, and T[n] indicates the total time of exposure permitted at that level.

(q) Food service establishments shall be operated and maintained in accordance with the Rules of the Department entitled "Food Service Establishments", Chapter 511-6-1;

(r) Plants which are poisonous or which harbor vermin shall be controlled in areas used for mass gathering by utilizing either mechanical (cutting and mowing) or chemical, or both, or other safe and effective methods approved by the Department;

(s) Insect, Reptile, and Rodent Control. Mosquitoes, flies, ticks, fleas, rats, mice, poisonous snakes and other vermin on the site of mass gathering shall be controlled by methods approved by the Department. Pesticides shall be a type and applied in a manner approved by the Department.

Cite as Ga. Comp. R. & Regs. R. 511-3-2-.03
Authority: O.C.G.A. Secs. 31-2A-6, 31-27-9.
History. Original Rule entitled "Facilities, Services and Activities to be Provided and Maintained at Site of Mass Gathering" adopted. F. Sep. 20, 2013; eff. Oct. 10, 2013.

Subject 511-3-3. DRINKING WATER SUPPLY.

Rule 511-3-3-.01. Applicability.

These Rules shall have application except in the following cases:

(a) In any county or municipality which has a local health code in effect;

(b) To any facility or system under the jurisdiction of and regulated by the Department of Natural Resources or its successor, under the Georgia Water Quality Control Act or the Georgia Comprehensive Solid Waste Management Act or their successors;

(c) To any public or community sewage treatment system.

Cite as Ga. Comp. R. & Regs. R. 511-3-3-.01
Authority: O.C.G.A. Secs. 31-2A-6, 31-12-8.
History. Original Rule entitled "Applicability" adopted. F. Oct. 15, 2013; eff. Nov. 4, 2013.

Rule 511-3-3-.02. Definitions.

For the purpose of this Chapter, the following words and phrases shall have the meaning as indicated:

(a) ANNULUS is the same as "annular space" and means any artifically-created void existing between a well casing or liner pipe and a borehole well.

(b) APPROVAL OR APPROVED means acceptable or accepted by the Health Authority in accordance with applicable specifications stated herein or with additional criteria accepted by the Health Authority.

(c) AQUIFER means one or more, or parts of one or more, geologic formations capable of yielding water to a well.

(d) BACK SIPHONAGE means siphonage of water or other liquids from external sources into the water supply during times of pressure differential, whether due to improper connections or failure of devices in the system.

(e) BORED WELL means any well excavated by an earth auger in which the casing extends from the ground surface into the aquifer.

(f) CERTIFIED WELL CONTRACTOR means any person who:

1. Engages in the construction, repair or alteration of individual on-site drinking water supply systems, either private or semi-public;

2. Is licensed as a well contractor in accordance with the Water Well Standards Act of 1985, O.C.G.A. Sections 12-5-120*et seq.*;

(g) COMMERCIAL DEVELOPMENT means any development other than residential development. It includes multiple family, retail, wholesale, commercial, office, industrial, church, etc., development.

(h) COMMUNITY WATER SUPPLY means any public water supply which serves at least fifteen (15) service connections used by year-round residents or which regularly serves at least twenty-five (25) year-round residents.

(i) CROSS CONNECTION means any configuration whereby a potable water supply is connected with any water supply system, sewer, drain, conduit, pool, storage reservoir, plumbing fixture or other device which contains (or may contain) contaminated water, sewage or other unsafe waste or liquid which may be capable of contaminating the potable water supply.

(j) DNR means the Georgia Department of Natural Resources.

(k) Department means the Georgia Department of Public Health.

(l) DRILLED WELL means any well, whether excavated by rotary or percussion, hydraulic drilling, having a casing that extends from the ground surface through an impermeable formation to an aquifer where adequate capacity is obtained.

(m) FLOOD PLAIN means any area susceptible to being flooded or as designated by the one hundred (100) year flood plain area, including Type A Zone flood areas as determined or established in flood studies. This term shall also include one hundred year water levels in detention and retention ponds.

(n) HEALTH AUTHORITY means the Georgia Department of Public Health or the local county board of health.

(o) NON-COMMUNITY WATER SUPPLY means any public water supply which regularly serves at least fifteen service connections or an average of twenty-five individuals for at least sixty days out of the year.

(p) NON-DRINKING WATER SUPPLY means any water supply not specifically used, nor intended or designed to be used, as a potable water supply. The term shall include but not be limited to water supplies for irrigation purposes, heating and cooling of structures, etc.

(q) ONSITE SEWAGE MANAGEMENT SYSTEM means a system that includes a septic tank, absorption field and all other elements intended to be used for management and disposal of sewage onsite.

(r) PHYSICAL DEVELOPMENT means construction including but not limited to any site preparation, grading, excavation for slabs or footings, erection of a structure(s), road construction or installation of an onsite sewage management system(s).

(s) POINT OF AVAILABILITY means the nearest location where a community water supply may be connected as determined by the appropriate governmental jurisdiction.

(t) POTABLE WATER SUPPLY means any water supply that is satisfactory for drinking, culinary and domestic purposes. Potable water must meet the current standards established by the Environmental Protection Division of the Department of Natural Resources.

(u) PREMISES means any place or building(s) where people live, work or congregate.

(v) PRIVATE WATER SUPPLY means any water supply consisting of a single well and serving no more than two single residences on one lot.

(w) PUBLIC WATER SYSTEM means a system for the provision to the public of piped water for human consumption, if such system has at least fifteen service connections, or regularly serves an average of at least twenty-five individuals, at least sixty days out of the year.

(x) RESIDENCE means any building or structure intended for housing of a single family.

(y) SANITARY SEWER means a pipe or system of pipes, manholes, etc., constructed for the purpose of conveying sewage.

(z) SEMI-PUBLIC WATER SUPPLY means any water supply other than a private water supply which serves less than fifteen service connections or twenty-five people on a daily basis at any time during the year.

(aa) SPECIAL EVENT means any activity attracting more than fifty persons that is sponsored, organized, promoted, managed or financed by any person, group, partnership, organization, corporation, business or governmental entity where individuals congregate to participate in or observe an activity in outdoor or portable enclosed or semi-enclosed structures for more than two consecutive hours.

(bb) USEABLE AREA means the total area in a lot that is determined by the Health Authority to be suitable for installation of an onsite sewage management system including the reserve area. The area shall not include any bodies of water, floodplain, easements, etc., except those portions that would be precluded for use by this Chapter via minimum separation distance requirements.

(cc) WATER SUPPLY means the source from which the water is obtained and all structures, machinery, conduits and other appurtenances by means of which the water is collected, treated, stored, protected, or delivered to the customer/consumer.

(dd) WELL means an excavation or opening into the ground by which groundwater is sought or obtained.

Cite as Ga. Comp. R. & Regs. R. 511-3-3-.02
Authority: O.C.G.A. Secs. 31-2A-6, 31-12-8.
History. Original Rule entitled "Definitions" adopted. F. Oct. 15, 2013; eff. Nov. 4, 2013.

Rule 511-3-3-.03. General Provisions.

(1) Owners of private homes and semi-public water supplies and all rented or leased premises shall furnish at least one (1) convenient outlet with the capacity to supply an adequate quantity of potable water for drinking and domestic purposes. The number, type and location of the water system appurtenances shall meet applicable building and plumbing codes. Pressure and capacity shall be commensurate with occupancy and use levels and shall meet applicable codes. Special event sponsors must provide an adequate number of potable water supplies as set forth by the local plumbing code.

(2) No person may install or repair a semi-public water supply nor install a private water supply unless he or she is a licensed well contractor in accordance with the Water Well Standards Act of 1985, O.C.G.A. Sections 12-5-120*et seq.*

(3) Licensed contractors are subject to the requirements of the Water Well Standards Act of 1985, O.C.G.A. Sections 12-5-120*et seq.*, and this Rules Chapter. Violations of this Chapter shall be considered in view of the requirements of the Act, and contractors shall be held liable for any violations of either or both if applicable.

(4) A coliform test performed by an approved lab shall be required upon completion of construction and following disinfection of the system. The sample results must be satisfactory before final construction can be approved. Disinfection and sampling must be continued until satisfactory results are obtained.

(5) Upon request by the property owner, the Health Authority will sample the supply to determine bacteriological quality, provided well construction meets all regulatory requirements. Sampling of unapproved or noncomplying wells shall be at the Health Authority's discretion. A sample is considered satisfactory and meeting the minimum bacteriological quality limits of this regulation if one (1) or less coliform bacterium per one hundred (100) milliliter of sample is present.

(6) No person shall allow a public, private, or semi-public water supply to be connected directly or indirectly with any other water supply, sewer, drain, conduit, pool, storage reservoir, plumbing fixture, or other device which contains or may contain contaminated water, liquid, gasses, sewage, or other waste of unknown or unsafe quality capable of contaminating the water system. No backflow, configuration bypass arrangement, jumper connections, removable section, swivel or changeover device, or other temporary, permanent or potential connection through which (or because of which) backflow siphonage could occur will be allowed.

(7) No outlet from a water supply shall be installed or maintained so that back siphonage is possible. Approved backflow preventer devices shall be required on all outlets to prevent contamination of the supply and aquifer. The procedure for backflow and back siphonage prevention and cross connection control shall conform to those recommended by the American Water Works Association Manual 14, and the U.S. Environmental Protection Agency Cross Connection Manual.

Cite as Ga. Comp. R. & Regs. R. 511-3-3-.03
Authority: O.C.G.A. Secs. 31-2A-6, 31-12-8.
History. Original Rule entitled "General Provisions" adopted. F. Oct. 15, 2013; eff. Nov. 4, 2013.

Subject 511-3-4. SOLID WASTE.

Rule 511-3-4-.01. Applicability.

These Rules shall be in force in any county or municipality which does not have local solid waste regulations in effect.

Cite as Ga. Comp. R. & Regs. R. 511-3-4-.01
Authority: O.C.G.A. Secs. 31-2A-6, 31-12-8.

History. Original Rule entitled "Applicability" adopted. F. Oct. 15, 2013; eff. Nov. 4, 2013.

Rule 511-3-4-.02. Definitions.

For the purpose of this Chapter, the following words and phrases shall have the meaning as indicated:

(a) APPROVAL OR APPROVED shall mean acceptable or accepted by the Health Authority in accordance with applicable specifications stated herein or with additional criteria accepted by the authority.

(b) GARBAGE shall mean all household or domestic waste, including waste from the preparation and cooking of food, grease, vegetable, fruit and meat scraps, ashes, cans and bottles, paper, floor sweepings, cardboard, and other such material to be disposed of from residences, churches, schools, office buildings, business establishments and similar places.

(c) HAZARDOUS WASTE shall mean solid or liquid waste material resulting from the manufacture or use of pesticides and drugs (other than normal household use, pathological wastes, highly flammable or explosive wastes, caustic wastes, toxic wastes, sewage sludge, and other waste material that the Health Authority determines to be a likely hazard to the public health, safety or environment.

(d) HEALTH AUTHORITY means the local county health board.

(e) INCINERATION means the process of converting any combustible material into an inert noncombustible ash or residue by burning in a manner and in equipment approved by the appropriate regulatory authority.

(f) INDUSTRIAL REFUSE means waste material from industrial processes, manufacturing, canneries, slaughterhouses, packing plants, poultry processing plants and similar industries, and large quantities of condemned foods. Industrial refuse also includes waste material from the construction, remodeling and repair operations on houses, commercial buildings and other structures, such as: concrete, bricks, plaster, stone, earth, lumber, shavings and sawdust.

(g) NUISANCE means whatever is detrimental to human health or whatever renders or tends to render soil, air, water, food impure or unwholesome.

(h) PERSON means any individual, partnership, corporation or association including bodies political and corporate.

(i) PRIVATE CONTRACTOR means any person, other than a municipality, who collects, removes, salvages, scavenges and/or disposes of refuse from one (1) or more public or private premises, other than his or her own, whether or not under written contract, and whether or not for compensation.

(j) REFUSE means garbage, rubbish, and industrial refuse.

(k) REFUSE RECEPTACLE means a can, compartment, bin or other container used to keep, collect, or store refuse pending its removal for disposal.

(l) RUBBISH means tree branches, twigs, grass and shrub clippings, weeds, leaves, street sweepings, stumps, and other similar materials.

(m) SOLID WASTE means putrescible and nonputrescible wastes, except water-carried body waste, and shall include garbage, rubbish, ashes, street refuse, dead animals, sewage sludges, animal manures, industrial wastes, (waste materials generated in industrial operations), residue from incineration, food processing wastes, demolition wastes, abandoned automobiles, dredging wastes, construction wastes, and other waste material in a solid or semi-solid state not otherwise defined in these regulations.

(n) SPECIAL EVENT means any activity attracting more than fifty (50) persons that is sponsored, organized, promoted, managed or financed by any person, group, partnership, organization, corporation, business or governmental entity where individuals congregate to participate in or observe an activity in outdoor or portable enclosed or semi-enclosed structures for more than two (2) consecutive hours.

Cite as Ga. Comp. R. & Regs. R. 511-3-4-.02
Authority: O.C.G.A. Secs. 31-2A-6, 31-12-8.
History. Original Rule entitled "Definitions" adopted. F. Oct. 15, 2013; eff. Nov. 4, 2013.

Rule 511-3-4-.03. General Provisions.

(1) Solid waste generators, including occupants of any premises, shall store garbage, pending collection, in water-tight, approved plastic or galvanized metal containers no less than 20 gallons in capacity, with close fitting lids and handles or in such other types of receptacles as may be approved by the Health Authority. Other non-putrescible refuse which cannot be stored in receptacles pending collections shall be flattened, stacked, piled or bundled.

(2) Bulk storage and compactor containers must be water-tight, of sturdy, rust-resistant construction and must be easily washable. Tight-fitting doors, lids or other approved closures must be affixed over each access or discharge port. Containers must include fittings for standard hoisting equipment. Removable plugs must be installed in drain openings and lids and doors on bulk containers used for garbage storage must be closed at all times after loading or emptying.

(3) Permanent bulk storage containers receiving garbage shall be placed on solid or concrete platforms or pads, located and constructed to minimize spillage and facilitate cleanup. The platform surface must slope to a drain so that liquid waste flows by gravity to a sanitary sewer. A water supply under pressure shall be required for container cleansing.

(4) The location of solid waste containers shall be as close as practical to the highest concentration of employees or to the participants, observers and employees to special events. However, the units should be placed as far from the food service area as possible.

(5) At special events, solid waste containers shall be located convenient to participants and accessible at all times for maintenance by truck.

(6) Temporary bulk storage and compactor containers receiving garbage shall be placed on a solid surface located and constructed to minimize spillage and facilitate cleanup.

(7) Organic residue shall be removed. If necessary, garbage storage receptacles shall be washed. Storage locations and containers shall be treated with an effective pesticide if indicated.

(8) Special event sponsors shall obtain a permit for needed solid waste storage containers as a requirement for authorization to hold the event. A contract must be provided for verification of proper storage, handling and disposal of solid waste.

(9) The number of containers required shall be calculated based on the anticipated peak attendance at a special event as determined by the health authority.

(10) Refuse storage containers shall be required in such locations, types and quantities determined by the Health Authority to meet the specific refuse storage and collection-frequency needs of the establishment, the occupants of the premises. Special requirements, including containerization, special collection frequencies or handling procedures may be required for rapidly-putrescible wastes.

(11) To facilitate refuse collection, generators shall place refuse receptacles in a location convenient and accessible for collection. No refuse or refuse receptacles shall obstruct gutters, drains, walkways, streets or other passageways or constitute fire or safety hazards. Individual refuse receptacles at multiple-unit buildings shall be marked to identify the owner.

(12) Refuse generators may elect to bale, shred, recycle or otherwise treat or process nonputrescible refuse onsite by means approved by the Health Authority. Remaining solid waste shall be stored, collected and disposed in accordance with this regulation.

(13) The generation, storage or use of garbage for animal feeding is specifically prohibited.

(14) Grease shall not be incorporated into solid waste stored for collection unless it is in sealed containers. Grease shall be stored separately for recycling or disposal in a manner approved by the Health Authority.

(15) The Health Authority may require replacement, removal or repair of defective containers, additional containers, premises sanitation, container cleansing, odor control, and elimination of fly, rat or mosquito populations and breeding conditions.

(16) Where local authorities allow solid waste to be placed in plastic or other disposable containers for immediate collection, such solid waste shall be returned to proper storage if not collected as scheduled. Scattered refuse shall be stored and collected in accordance with the regulation.

(17) All equipment used for the collection and transport of refuse shall be designed to prevent escape of any liquid. All surfaces of equipment coming in contact with wastes shall be smooth, nonabsorbent and in good repair.

(18) All equipment shall be cleansed and treated with an approved insecticide as often as necessary.

(19) All refuse spilled during collection or transportation shall be promptly removed by the refuse collector. The generator shall be responsible for spillage removal during normal use and storage.

(20) At each collection, all refuse in the refuse receptacle shall be removed. Receptacles shall be left covered and returned to proper use locations.

(21) Dead animals shall be stored, collected and disposed in a manner approved by the Health Authority.

(22) When required by the Health Authority, garbage (or solid wastes containing any quantity of garbage) shall be removed from each premises at least once a week; in no case shall a garbage-collection interval exceed seven days. More frequent collection may be required for rapidly decomposing, odorous or hazardous wastes and garbage or mixed refuse from food service and similar establishments or as often as deemed necessary by the Health Authority. Containers serving multiple facilities shall meet disposal criteria for the facility having the highest level need for proper refuse management.

Cite as Ga. Comp. R. & Regs. R. 511-3-4-.03
Authority: O.C.G.A. Secs. 31-2A-6, 31-12-8.
History. Original Rule entitled "General Provisions" adopted. F. Oct. 15, 2013; eff. Nov. 4, 2013.

Subject 511-3-5. PUBLIC SWIMMING POOLS, SPAS, AND RECREATIONAL WATER PARKS.

Rule 511-3-5-.01. Definitions.

The following definitions shall apply in the interpretation and enforcement of this chapter.

(1) "Abandoned Pool" means a public pool that has not been permitted or not in operation for at least four calendar years.

(2) "Abrasion Hazard" means a sharp or rough surface that would scrape the skin by chance during normal use.

(3) "Accessible" means easily exposed for inspection and for the replacement of materials or parts with the use of tools.

(4) "Active Area" means those water areas in pools which are three feet or less in water depth.

(5) "Air Induction System" means a system whereby a volume of air (only) is induced into a hollow duct in a spa floor, bench or other location. The air induction system is activated by a separate air power blower.

(6) "Air Pump Assist Backwash" means the compression of air in the filter effluent chamber (by means of an air compressor or by the water pressure from the recirculating pump) which, when released, rapidly decompresses and forces water in the filter chamber through the elements in reverse, dislodging the filter aid and accumulated dirt, carrying it to waste.

(7) "Alkalinity" means the amount of bicarbonate, carbonate or hydroxide compounds present in water solution. See also "Total Alkalinity."

(8) "Aquatic Facility" means a physical place that contains one or more public swimming pools and support infrastructure.

(9) "Aquatic Feature" means an individual component within a public pool. Examples include slides, structures designed to be climbed or walked across by bathers, and structures that create falling or shooting water.

(10) "Automated Controller" means a system of at least one chemical probe, a controller, and auxiliary or integrated component that senses the level of one or more water parameters and provides a signal to other equipment to maintain the parameters within a user-established range.

(11) "Backwash" means the process of thoroughly cleansing the filter medium, elements, and the contents of the filter vessel by the reverse flow of water through the filter.

(12) "Barrier" means a fence, safety cover, wall, building wall or a combination thereof, which completely surrounds or covers the swimming pool or spa and obstructs access to the swimming pool, spa or recreational water park.

(13) "Bather" means any person who uses a swimming pool, spa, or recreational water park, or adjoining deck areas for the purpose of water sports, recreation, therapy, or related activities.

(14) "Booster or Jet Pump System" means a system whereby one or more hydrotherapy jets are activated by the use of a pump which is completely independent of the filtration and

heating system of a spa. It may also mean a device used to provide hydraulic support for certain types of equipment such as cleaning systems, gas chlorinators and solar systems.

(15) "Breakpoint Chlorination" means the conversion of inorganic chloramine compounds to nitrogen gas by reaction with free available chlorine. The point at which the drop occurs is referred to as the "breakpoint". The amount of free chlorine that must be added to the water to achieve breakpoint chlorination is approximately ten times the amount of combined chlorine in the water.

(16) "Brominator" means a device to apply or to deliver a bromine disinfectant to water at a controlled rate.

(17) "Cartridge" means a pleated or surface-type filter component with fixed dimensions that is designed to remove suspended particles from water flowing through the filter.

(18) "Chemical Feeder" means a mechanical device for applying chemicals to pool or spa water.

(19) "Chloramine" means a compound formed when chlorine combines with nitrogen or ammonia that causes eye and skin irritation and has a strong, objectionable odor.

(20) "Chlorinator" means a device to apply or to deliver a chlorine disinfectant to water at a controlled rate.

(21) "Chlorine Generator" means equipment that generates chlorine, hypochlorous acid or hypochlorite on site for disinfection and oxidation of water contaminants.

(22) "Circulation Equipment" means the mechanical components that are part of a circulation system in a pool or spa. Circulation equipment includes, but is not limited to, pumps, hair and lint strainers, filters, valves, gauges, meters, heaters, surface skimmers, inlet/outlet fittings, and chemical feeding devices. These components may have separate functions, but when connected to each other by piping, perform as a coordinated system for purposes of maintaining pool and spa water in a clear, sanitary and desirable condition.

(23) "Circulation System" means an arrangement of mechanical equipment or components, connected by piping to a pool or spa in a closed circuit. The function of a circulation system is to direct water from the pool or spa, causing it to flow through the various system components for purposes of clarifying, heating, purifying and returning the water back to the original body of water.

(24) "Clarifier" means a chemical that coagulates and neutralizes suspended particles in water, such as inorganic salts of aluminum or iron and water-soluble organic polyelectrolyte polymers. Also called coagulant or flocculent.

(25) "Contact Concentration" means the concentration of a chemical in a flow of water. This concentration depends on the rate of addition, the flow rate of the water and the

efficiency of the mixing. It is calculated using the equation (assumes complete mixing): Amount of Chemical (gpm)/Water Flow Rate (gpm) x 4.41 = Contact Concentration (mg/L).

(26) "Combined chlorine" means the reaction of free chlorine with ammonia and nitrogen compounds to form chloramines.

(27) "Contamination Response Plan" means a plan for handling contamination from formed-stool, diarrheal-stool, and vomit.

(28) "Coping" means the cap on the pool or spa wall that provides a finishing edge around the pool or spa, whether formed, cast in place, pre-cast concrete, or pre-fabricated from metal or plastic materials.

(29) "Country Club" means a location with facilities for outdoor sports and social activities for which members pay a membership fee other than a daily fee, periodically for the use of facilities and services by them and their guests. Fraternal organizations may be included in this definition.

(30) "Cove" means the radius between the pool or spa wall and the pool or spa floor.

(31) "CT Value" means a representation of the concentration of the disinfectant (C) multiplied by time in minutes (T) needed for inactivation of a particular contaminant. The concentration and time are inversely proportional; therefore, the higher the concentration of the disinfectant, the shorter the contact time required for inactivation. The CT value can vary with pH or temperature change so these values must also be supplied to allow comparison between values.

(32) "Cyanuric Acid" means a chemical that helps reduce the excess loss of chlorine in water due to the ultraviolet rays of the sun. It is also called stabilizer, isocyanuric acid, conditioner or triazinetrione.

(33) "Decks" means those areas immediately adjacent to or attached to a pool or spa that are intended for bathers to sit, stand, or walk upon. It connects the pool to adjacent amenities, entrances, and exits. This area is expected to be regularly trafficked and made wet by bathers.

(34) "Deep Areas" means water depths in excess of five feet.

(35) "Department" means the Georgia Department of Public Health.

(36) "Diatomite" means the filtering medium of a diatomaceous earth filter composed of microscopic fossil skeletons of the "diatom," a tiny freshwater marine plankton.

(37) "Disinfectant" means an agent used to kill undesirable or pathogenic (disease-causing) organisms that have a measurable residual at a level adequate to make the desired kill.

(38) "Diving Board" means a recreational mechanism for entering a swimming pool, consisting of a semi rigid board that derives its elasticity through the use of a fulcrum mounted below the board. This term includes, without limitation, a "jump board" with a coil spring, leaf spring or comparable device located beneath the board which is activated by the force exerted in jumping on the board, and a "stationary diving platform" used for diving and constructed or located on site, including natural or artificial rocks, pedestals or other items.

(39) "DPD (Diethyl-p-phenylene Diamine)" means a reagent and test method that specifically measure bromine or free available and total chlorine, producing a series of colors from pale pink to dark red.

(40) "Effective Filter Area" means total surface area through which the designed flow rate will be maintained during filtration.

(41) "Effluent" means the water that flows out of a filter, pump or other device.

(42) "EPA Registered" means all products regulated and registered under the Federal Insecticide, Fungicide, and Rodenticide Act (FIFRA) by the U.S. Environmental Protection Agency EPA registered products will have a registration number on the label which can be verified by using the EPA National Pesticide Information Retrieval System.

(43) "Equipment Room" means a space intended for the operation of pool pumps, filters, heaters and controllers.

(44) "Feet of Head" means a basis for indicating the resistance in a hydraulic system, equivalent to the height of a column of water that would cause the same resistance (100 feet of head equals 43 pounds per square inch).

(45) "Filter" means a device that removes undissolved particles from water by recirculating the water through a porous substance (a filter medium or element).

(46) "Filter Element" means a device within a filter tank designed to entrap solids and conduct water to a manifold, collection header, pipe, or similar conduit and return it to the pool or spa. A filter element usually consists of a septum and septum support or a cartridge.

(47) "Free Available Chlorine (FAC)" means the portion of the total available chlorine that is not "combined chlorine" and is present as hypochlorous acid (HOCl) or hypochlorite ion (OCl-) and will react chemically with undesirable or pathogenic organisms.

(48) "Flume" means the riding channels of a waterslide which accommodate riders using or not using mats, tubes, rafts, and other transport vehicles as they slide along a path lubricated by a water flow.

(49) "Handhold/Handrail" means a device that can be gripped by a user for the purpose of resting or steadying him/herself. It is not limited to but may be located inside or outside the pool or spa or as part of a set of steps or deck-installed equipment.

(50) "Hardness" means the amount of calcium and magnesium dissolved in water; measured by a test kit and expressed as parts per million (ppm) of equivalent calcium carbonate.

(51) "Health Authority" means both the Georgia Department of Public Health and the County Board of Health - Environmental Health Office.

(52) "Hydrotherapy Spa or Spa" means a unit that may have a therapeutic use but which is not drained, cleaned, or refilled for each individual. It may include, but not be limited to, hydrotherapy jet circulation, hot water/cold water mineral baths, air induction bubbles or any combination thereof. Industry terminology for a spa includes, but is not limited to,"therapeutic pool," "hydrotherapy pool," "whirlpool," and "hot spa."

(53) "Imminent Health Hazard" means a product, practice, circumstance, event or condition that requires immediate correction or cessation of operation in order to prevent a significant threat of danger or death, injury or illness.

(54) "Increased Risk Public Pool" means a public pool which, due to its intrinsic characteristics and intended users, has a greater likelihood of microbial contamination. An increased-risk public pool includes spray pads, wading pools, and others designed for children less than five years old.

(55) "Influent" means the water entering a filter or other device.

(56) "In ground Swimming Pool" means any pool where the sides rest in partial or full contact with the earth.

(57) "Lifeguard" means an individual who has successfully completed a recognized lifeguard training course, holds a current certificate for such training, has met the pre-service requirements, and is participating in continuing in-service training requirements of the facility.

(58) "Modification" means changes or repairs to equipment, interior finishes, or fixtures on a public swimming pool that will not disturb or remove any portion of the plumbing, decking, or watertight shell structure.

(59) "Monitoring" means the regular and purposeful observation and checking of systems or facilities and recording of data, including system alerts, excursions from acceptable ranges, and other facility issues. Monitoring includes human or electronic means.

(60) "Multi-port Filter-Control Valve" means a multiport valve having a number of control positions for various filter operations that combines in one unit the function of two or more single valves.

(61) "Non-swimming Area" means any portion of a pool where water depth, offset ledges, or similar irregularities prevents normal swimming activities.

(62) "Organic Matter" means perspiration, urine, saliva, suntan oil, cosmetics, lotions, dead skin, and similar debris introduced to water by users and the environment.

(63) "Orthotolidine (OTO)" means a colorless reagent that reacts with chlorine or bromine to produce a series of yellow-to-orange colors which indicate the amount of chlorine or bromine in water.

(64) "Oxidation Reduction Potential" means a measure of the tendency for a solution to either gain or lose electrons; higher (more positive) oxidation reduction potential indicates a more oxidative solution.

(65) "Overflow System" means a system for the removal of pool/spa surface water through the use of overflows, surface skimmers and surface water collection systems of various design and manufacture.

(66) "Patron" means a bather or other person or occupant at a public pool who may or may not have contact with water either through partial or total immersion. Patrons may not have contact with the water, but who might still be exposed to potential contamination from the facility's air, surfaces, or aerosols.

(67) "Peninsula / Wing Wall" means a structural projection into a pool intended to provide partial separation within the body of water.

(68) "pH" means the negative log of the concentration of hydrogen ions. As pH is raised, more ionization occurs and chlorine disinfectants decrease in effectiveness.

(69) "Pool" means any artificial water holding structure with a closed-loop circulation of water through a water treatment system with a return to the structure.

(70) "Private Pool" means any constructed pool, permanent or non-portable, that serves a single-family dwelling and is used only by the residents of that dwelling and their guests.

(71) "Public Swimming Pool" means any structure, chamber, or tank containing an artificial body of water shared and used by the public for swimming, diving, wading, recreation or therapy, together with buildings, appurtenances and equipment used in connection with the body of water, regardless of whether a fee is charged for its use. The term includes municipal, school, hotel, or motel pools, and any pool to which access is granted in exchange for payment of a daily fee. The term shall also include pools and spas operated by or serving camps, churches, day care centers, group home facilities of twelve or more clients, institutions, parks, state agencies, condominiums, mobile home parks, recreational vehicle parks, associations, health clubs, special purpose pools, and recreational water parks. Public swimming pools are divided into the following classifications:

(a) Class "A" means a pool intended for use for accredited competitive swimming events such as Federation Internationale De Natation (FINA), USA Swimming, USA Diving, National Collegiate Athletic Association (NCAA) and National Federation of State High School Associations (NFHS) and other governing bodies. The use of such a pool is not limited to competitive events.

(b) Class "B" means a pool intended for general public recreational use.

(c) Class "C" means a pool operated solely for and in conjunction with lodging and housing such as hotels, motels, campgrounds and multi-residential housing.

(d) Class "D" means special purpose pools (see special purpose pool types).

(e) Class "E" means pools or spas used for instruction, play, or therapy, and having a water temperature above 90 degrees°F (32 degrees °C).

(72) "Special Purpose Pools" means any pool operated for recreational play and other special purposes, including, but not limited to, wave or surf action pools, activity pools, interactive water activity pools, wading pools, and activity pools. These include, but are not limited to the following types:

(a) Activity Pools. A pool designed for casual water play ranging from simple splashing activity to the use of attractions placed in the pool for recreation. This includes, but is not limited to slides, flumes, lilypad walks, log rolls, cable, rope, boom drops, and any other falling entry features. These pools allow for the bather to drop into the pool area from a height of six inches to four feet above the water surface and in various positions of entry.

(b) Continuous Water Course. A manufactured stream of water of near-constant depth in which water is moved by pumps or other propulsion to provide a flow that transports bathers over a defined path.

(c) Diving Pool. A pool used exclusively for diving.

(d) Dual Use Pool. A pool that is normally used as a swimming pool, but which has no more than one water slide or one other feature other than diving boards which uses the main body of water as its landing or activity area.

(e) Exercise Spa. A variant of a spa in which the design and construction includes specific features and equipment to produce a water flow intended to allow recreational physical activity including but not limited to, biking and treadmills. Spas can include peripheral jetted seats intended for water therapy, heater, circulation and filtration system, which must be separate and distinct from the spa and must have separate controls.

(f) Interactive Water Play Pool. A pad which contains various fountains, interactive water sprays, or waterfall features. The pad slopes to one or more drains which empties into a reservoir which is recirculated and disinfected before its return to the water features. These pools are also known as splash pads, spray pads, wet decks. For the purposes of the Chapter, only those designed to recirculate water and intended for public use and recreation shall be regulated.

(g) Landing Pool. A pool located at the exit of one or more waterslide flumes. The body of water is intended and designed to receive a bather emerging from the flume for the purpose of terminating the slide action and providing a means of exit to a deck or walkway area.

(h) Leisure River. A riding water course where ingress and egress is effectively limited to designated points of entry and exit, also known as a lazy river.

(i) Sensory Deprivation Chamber (float tank). A chamber that provides a light and sound free environment, contains a saturated solution of sodium chloride or magnesium sulfate having a specific gravity of 1.27 to 1.3, and is maintained at a temperature of approximately 93.5°F (34.1°C).

(j) Wading Pool. A shallow pool with a depth of 18 inches or less, and which has no water activity features.

(k) Wading Interactive Pool. A pool with a depth of 18 inches or less and which has any number of water features within the pool area.

(l) Wave Pool. A large body of water that has a mechanism for generating an oscillating wave-form at one end and ending at the other end with a zero-depth-entry.

(73) Zero Depth Entry Pools. A pool in any classification that has a sloping edge or beach at one end in place of a wall.

(74) "Permanently Installed Swimming Pool" means a pool that is constructed in the ground or in a building in such a manner that it cannot be readily disassembled for storage.

(75) "Therapeutic Pool" means a pool used in physical programs operated by medical facilities licensed by the Department of Community Health or operated by a licensed physical therapist.

(76) "Pool Slide" means a slide having a configuration as defined in the Code of Federal Regulations (CFR) Ch. II, Title 16 Part 1207 of the Consumer Product Safety Commission, or which is similar in construction to a playground slide designed to allow users to slide from an elevated height to a pool. The term includes children's (tot) slides and all other non-flume slides that are mounted on the pool deck or within the basin of a public swimming pool.

(77) "Potable Water" means any water, such as an approved domestic water supply, which is microbiologically safe and otherwise suitable for drinking.

(78) "PPM" means an abbreviation for parts per million, the unit of measurement used in chemical testing which indicates the parts by weight in relation to one million parts by weight of water, such as the term milligrams per liter (mg/L).

(79) "Precipitate" means a solid material which is forced out of a solution by some chemical reaction and which may settle out or remain as a haze in suspension (turbidity).

(80) "PSI" means an abbreviation for pounds per square inch.

(81) "Rate of Flow" means the quantity of water flowing past a designated point within a specified time, such as the number of gallons flowing in one minute (gpm).

(82) "Rated Pressure" means that pressure that is equal to or less than the designed pressure and appears on the data plate of the equipment.

(83) "Recreational Water Park" means a facility or area which incorporates one or more special purpose pools, together with associated buildings, appurtenances, and equipment designated for public bathing or swimming.

(84) "Removable" means something that can be disassembled with the use of simple tools such as a screwdriver, pliers or wrench.

(85) "Remodeling" means the activity of restoring all or part of the physical structure of a pool or spa into good condition. This includes the rebuilding or replacing of worn and broken parts or components that require disturbing segments of the piping system, decking, or watertight shell structure.

(86) "Responsible Person" means an individual that is responsible for daily water monitoring operations when a "trained operator" is not on-site or making visits to the public swimming pool daily.

(87) "Return Inlet" means the opening or fitting through which the water under positive pressure returns into a pool or spa.

(88) "Return Piping" means that piping through which water is returned to the pool.

(89) "Ring Buoy" means a ring-shaped floating buoy capable of supporting a bather in the water.

(90) "Rinse Shower" means a shower typically located on the deck area and supplied with ambient temperature water. The main purpose is to remove dirt, sand, or organic material prior to entering the water to reduce the introduction of contaminants and the formation of disinfection by-products.

(91) "Shallow Area" means portions of a pool or spa with water depths five feet or less.

(92) "Safety Plan" means a written document that has procedures, requirements, or standards related to safety which the pool staff shall follow. The safety plan shall include training and emergency response procedures.

(93) "Sanitize" means reducing the level of microbes to that level considered safe by public health standards. This may be achieved through a variety of chemical or physical means including chemical treatment, physical cleaning, or drying.

(94) "Saturation Index" means a mathematical representation or scale representing the ability of water to deposit calcium carbonate, or dissolve metal, concrete or grout.

(95) "Shock Treatment" means the practice of adding significant amounts of an oxidizing chemical to water to destroy ammonia and nitrogenous and organic contaminants in water.

(96) "Skimmer Weir" means the part of a skimmer which adjusts automatically to small changes in water level to assure a continuous flow of water to the skimmer.

(97) "Slip Resistant" means a surface that has been treated or constructed so as to significantly reduce the chance of a patron slipping. The surface shall not be an abrasion hazard. All surfaces required to be slip-resistant shall have a minimum dynamic coefficient of friction at least equal to the requirements of ANSI A137.1-2012 or successor standard for that installation as measured by the DCOF AcuTest.

(98) "Sodium Hypochlorite (NaOCI)" means a clear liquid form of an inorganic chlorine compound obtainable in concentrations of 5% to 16% available chlorine.

(99) "Special Use Pool" means a pool that does not meet the operational and design characteristics of any public swimming pool class or type identified elsewhere in this chapter. A special use pool may be considered through an application for a variance.

(100) "Suction Outlet" means the opening or fitting through which the water under negative pressure is drawn from the pool or spa.

(101) "Suction Piping" means that piping through which water is removed from the pool.

(102) "Surface Skimming System" means perimeter-type overflows, surface skimmers and surface water collection systems of various design and manufacture which permit the continuous removal of floating debris and surface water to the filter.

(103) "Supplemental Disinfection Systems" means those disinfection processes or systems installed in addition to the primary system required on all increased risk public pools.

(104) "Test Kit" means a device used to monitor specific chemical or agent residual or demands in pool or spa water.

(105) "Theoretical Peak Occupancy Load" means the anticipated peak number of bathers in the water and on the deck. This occupancy is also used for design purposes and to determine services that support bathers. For public swimming pools, the theoretical peak occupancy load is calculated by using the water density factor and deck area:

(a) Flat Water. A public swimming pool in which the water line is static except for movement made by users usually as a horizontal use as in swimming. Diving spargers do not void the flat water definition.

(b) Agitated Water. A public swimming pool with mechanical means (aquatic features) to discharge, spray, or move the water's surface above or below the static water line of the pool so people are standing or playing vertically. Where there is no static water line, movement shall be considered above the deck plane.

(c) Hot Water. A pool or spa with a water temperature over 90°F (32°C).

(106) "Time Clock" means a mechanical device that automatically controls the periods that a pump, filter, chlorinator, heater, blower and other electrical devices are running.

(107) "Total Alkalinity" means the ability or capacity of water to resist change in pH; also known as the buffering capacity of water. Measured with a test kit and expressed as ppm.

(108) "Total Available Chlorine (TAC)" means the sum of both the free available and combined chlorines.

(109) "Trained Operator" means an individual responsible for the operation and maintenance of the public pool water and the associated infrastructure of the facility who has successfully completed a Department approved operator training course.

(110) "Turbidity" means the cloudy condition of water due to the presence of extremely fine particulate materials in suspension that interfere with the passage of light.

(111) "Turnover Rate" means the period of time (usually in hours) required to circulate a volume of water equal to the pool or spa capacity.

(112) "Underwater Seat Bench" means a submerged seat without hydrotherapy jets.

(113) "Vacuum" means the reduction of atmospheric pressure within a pipe, tank, pump or other vessel. Vacuum is measured in inches of mercury. One inch (1") of mercury is equivalent to one and thirteen hundredths feet (1.13') of head. The practical maximum vacuum is thirty inches (30") of mercury or thirty three and nine tenths feet (33.9') of head.

(114) "Waterline". The waterline shall be defined in one of the following ways:

(a) Skimmer System. The waterline shall be at the midpoint of the operating range of the skimmers when there are no bathers in the pool or spa.

(b) Overflow System. The waterline shall be at the top of the overflow rim.

(115) Water slide. A slide that runs into a landing pool or runout through a fabricated channel with flowing water. A water slide may be classified by their physical and intended use characteristics. The following are types of waterslides:

(a) Body Slide. A water slide used without a vehicle.

(b) Children's Slide. A water slide generally intended only for use by persons under the height of 48 inches. Water slide has a maximum fall distance of 3 inches from slide exit where the rider enters the water and water depth is no more than 24 inches.

(c) Mat Slides. Water slide used with a designated mat as a vehicle.

(d) Specialty Slides. A proprietary water slide design, such as an uphill, half-pipe, or bowl ride, which does not conform to the standard classification.

(e) Speed Slide. Water slide where the riders achieve a velocity of 25 feet per second or more during the course of the ride.

(f) Tub Slides. Water slide used with a single or multi-person water slide tube.

(116) "Water Quality Testing Device" means a product designed to measure the level of a parameter in water. A WQTD includes a device or method to provide a visual indication of a parameter level, and may include one or more reagents and accessory items.

Cite as Ga. Comp. R. & Regs. R. 511-3-5-.01
Authority: O.C.G.A. §§ 31-2A-6, 31-12-8, 31-45-10.
History. Original Rule entitled "Definitions" adopted. F. Oct. 15, 2013; eff. Nov. 4, 2013.
Repealed: New Rule of same title adopted. F. Jan. 11, 2017; eff. Jan. 31, 2017.

Rule 511-3-5-.02. Scope.

(1) These rules prescribe minimum design, construction, and operation requirements for the protection of public health and safety of the public in swimming pools, spas, and recreational water parks.

(2) These rules are intended to cover certain aspects of the design, equipment, operation, permanent installation, new construction and remodeling of swimming pools, spas and recreational water parks. Where adequate standards do not exist and these rules do not

provide sufficient guidance for consideration of innovations in design, construction and operation of proposed pools, spas or recreational water parks, the Department will establish requirements necessary to protect the health and safety of the pool patrons.

(3) These rules shall not apply to private swimming pool and hot tubs or spas serving a single-family dwelling and used only by the residents of that dwelling and their guests, apartment complex pools, country club pools, subdivision pools which are open only to residents of the subdivision and their guests, therapeutic pools operated by a licensed medical facility or a licensed physical therapist, therapeutic chambers which are drained, cleaned, and refilled after each individual use, or religious ritual baths used solely for religious purposes.

(4) This Chapter shall apply to those counties where local rules and regulations governing public swimming pools were not in effect on 31 December 2000; provided, however, that the governing authority of a county or municipality may by ordinance or resolution elect to make apartment pools within their jurisdiction subject to this Chapter.

(5) All pools shall meet the requirements of this Chapter except as provided in subsection (6) below.

(6) Public swimming pools constructed prior to December 31, 2016 shall continue to be governed by the 2013 version of this Chapter with regard to design and construction requirements. Any such pool that is remodeled after 31 December 2016 shall be required to comply with the current version of this Chapter. Notwithstanding the foregoing, all pools shall be required to meet the current requirements of this Chapter related to the abatement of suction hazards.

(7) All single, dual, or multiple drain covers and grates shall comply with ANSI/APSP-16 or any successor standard that may be prescribed by ANSI/APSP.

Cite as Ga. Comp. R. & Regs. R. 511-3-5-.02
Authority: O.C.G.A. §§ 31-2A-6, 31-12-8, 31-45-10.
History. Original Rule entitled "Scope" adopted. F. Oct. 15, 2013; eff. Nov. 4, 2013.
Repealed: New Rule of same title adopted. F. Jan. 11, 2017; eff. Jan. 31, 2017.

Rule 511-3-5-.03. Permits.

(1) **General Provisions.**

(a) It shall be unlawful for any person to operate a public pool, spa, or recreational water park without having first obtained a valid operating permit from the health authority pursuant to this Chapter. Each pool must operate under a separate permit.

(b) It shall be unlawful for any person to build, alter, or remodel a public pool, spa, or recreational water park without first having obtained a valid construction permit from the health authority pursuant to this Chapter.

(c) Prior to the issuance of any permit under these rules, the applicant shall provide evidence of satisfactory compliance with the provisions of this Chapter and all other laws which apply to the location, construction, and maintenance of the pool, spa, or recreational water park, and the safety of persons therein.

(d) All permit applications shall be prepared in duplicate on forms provided by the Department. The original shall be filed with the health authority for the county in which the pool is located and a copy retained by the applicant.

(2) **Construction Permits.**

(a) Two complete sets of scaled construction plans must be submitted to the local health authority for approval when a public swimming pool, spa, or recreational water park attraction is to be constructed, altered, or remodeled, or when an existing or abandoned structure is to be converted for use as a public pool, spa, or recreational water park attraction. The plans shall be submitted at least thirty days prior to beginning construction and shall indicate, at a minimum, the proposed layout, the mechanical plans, the construction materials, and the type and model of proposed equipment.

(b) The theoretical peak occupancy shall be stated on the plans.

(c) One approved set of the construction plans shall remain at the construction site at all times during construction, and all contractors must have access to the plans.

(d) The construction plans must bear the seal of a licensed architect or professional engineer, unless the health authority deems it to be unnecessary.

(e) Complete specifications for the project shall accompany the plans, including manufacturer's cut sheets and specifications on all equipment.

(f) A professional engineer licensed in the state must sign the department hydraulic analysis form and submit the completed worksheet with the construction plans, unless the health authority deems it to be unnecessary.

(g) Any additional data required by the health authority for purpose of clarification, anticipated use, or to support any changes in design or scope of the project, must be submitted before issuance of a construction permit.

(h) The swimming pool, spa, or recreational water park shall be built in compliance with the plans as approved unless written approval of changes has been given by the health authority.

(i) A construction permit is valid for twelve months from the date of issue. If the project has not been completed within that time, then the owner must apply to renew the permit.

(j) The owner or its agent shall notify the health authority at specific, predetermined stages of construction and at the time of completion of the pool to allow inspections.

(k) The health authority may make or require third party inspections of any new or existing construction work to determine compliance with the provisions of this chapter and other ordinances or laws.

(3) **Operating Permit.**

(a) The permit shall be prominently displayed at all times, as close to the main entrance as practicable or as determined by the health authority.

(b) An operating permit shall not be valid for more than twelve months.

(c) An operational permit will not be issued to a facility if any violation of this Chapter is found during the permitting inspection, if applicable, written evidence of compliance with other state laws or local ordinances is not provided at the time of inspection, or if any outstanding fees are due.

(d) The owner must provide the health authority with a letter from a licensed architect, or professional engineer stating that the pool was built in compliance with the regulation and applicable codes. This letter need only be provided once.

(e) Copies of any testing reports for systems, such as air handling, are conducted, shall be furnished with the application.

Cite as Ga. Comp. R. & Regs. R. 511-3-5-.03
Authority: O.C.G.A. §§ 31-2A-6, 31-12-8, 31-45-10.
History. Original Rule entitled "Provisions" adopted. F. Oct. 15, 2013; eff. Nov. 4, 2013.
Repealed: New Rule entitled "Permits" adopted. F. Jan. 11, 2017; eff. Jan. 31, 2017.

Rule 511-3-5-.04. Structural Design.

(1) Pools shall be constructed of reinforced concrete or impervious and structurally sound materials, which provide a smooth, easily cleaned, watertight structure capable of withstanding the anticipated loads for full and empty conditions, taking into account climatic and hydrostatic considerations, and the integration of the pool with other structures. The structural design and materials used shall be in accordance with generally accepted structural engineering practices.

(2) Pool shell construction material may also include fiberglass, stainless steel and modular panel systems meeting the requirements of this section and any applicable American Society of Testing and Materials standards or state building code.

(3) Sand or earth shall not be permitted as an interior finish in a swimming pool or spa.

(4) The pool or spa shell, appurtenances, piping, filter system, pump and motor, and other components shall be constructed to facilitate protection from damage due to freezing.

(5) Surfaces within the pool or spa intended to provide footing for users shall be designed to provide a slip-resistant surface that is rigid and resistant to puncture and tear.

(6) Polyvinyl chloride (PVC) membrane systems may be used as an interior finish of a public pool if the supporting watertight pool shell to which the system is attached meets the structure requirements of the chapter. If the structure complies with the chapter, the contractor may permanently attach an approved PVC membrane or panel system to all surfaces within the pool. A PVC membrane shall be a minimum of 55 mils in thickness.

(7) The roughness or irregularity of such surfaces shall not be such as to cause injury or discomfort to the feet during normal use.

(8) The color of the interior shall be white or light pastel and shall not obscure the presence of a bather on the bottom of the pool, or of objects, debris, algae, or surface cracks within the pool.

(9) Swimming pools and spas and their appurtenances shall be constructed of materials which are nontoxic to man and the environment, impervious and enduring, able to withstand design stresses, and able to provide a watertight structure with a smooth and easily cleaned surface without cracks or joints, excluding structural joints, or to which a smooth, easily cleaned surface finish is applied or attached. Materials of manufacture for swimming pools and spas shall be capable of fulfilling the design, installation, and intended use requirements in these rules. The materials of manufacture, components and accessories used in public spas shall comply with the following:

(a) **Plumbing.** All plumbing shall be sized, installed, and maintained according to applicable State Regulations and local plumbing codes. Written evidence shall be provided from a licensed plumbing contractor or the plumbing inspector, as required by the local health authority, of compliance with the plumbing code.

(b) **Electrical Systems.** All electrical wiring, equipment, and installation, including the grounding of pool components, shall conform with national, state and local electrical codes. Written evidence shall be provided from a licensed electrical contractor or electrical inspector, as required by the local health authority, of compliance with all electrical codes.

(c) **Recirculation and Treatment Systems and other Components.** All recirculation and treatment system equipment and all other components such as

filters, recessed automatic surface skimmers, ionizers, ozone generators, solar heaters, disinfection feeders, chlorine generators and sensory deprivation chambers or float pods must be tested and approved using the current NSF Standard 50, Circulation System Components and Related Materials for Swimming Pool, Spas/Hot Tubs." Written evidence shall be provided from the designing engineer that all recirculation and treatment systems and all components used in the installation meet these approved standards.

(d) **Material Surfaces.** All surfaces that come in contact with the user shall be finished so that they do not constitute a cutting, pinching, puncturing or abrasion hazard under casual contact and intended use. All materials shall be maintained in accordance with manufacturer's instructions.

(e) **Compatibility**. Combinations of different materials shall be chemically and mechanically compatible for their intended use and environment. Any pool with a metal-based shell or utilizing dissimilar metals shall be provided with sacrificial anodes or other approved means to reduce galvanic action and electrolytic corrosion.

(f) **Ventilation.** Mechanical ventilation shall be provided for all indoor public swimming pools and pump rooms. All systems shall be sized, installed and maintained according to applicable state regulations and local codes. Written evidence shall be provided by a licensed heating, ventilation and air-conditioning contractor certifying compliance with all applicable codes and with the latest ANSI/ASHRAE standard 62.1, Ventilation for Acceptable Indoor Air Quality. A written statement of commissioning shall be provided to the owner stating that the amount of outdoor air meets the performance requirements of the applicable codes.

(10) Roofs or canopies over pools or spas shall be constructed so that water run-off does not drain into the pool or spa water.

Cite as Ga. Comp. R. & Regs. R. 511-3-5-.04
Authority: O.C.G.A. §§ 31-2A-6, 31-12-8, 31-45-10.
History. Original Rule entitled "Structural Design" adopted. F. Oct. 15, 2013; eff. Nov. 4, 2013.
Repealed: New Rule of same title adopted. F. Jan. 11, 2017; eff. Jan. 31, 2017.

Rule 511-3-5-.05. Dimensional Design.

(1) Swimming pools, spas, and recreational water park attractions may be constructed in any shape that is safe and which allows for adequate circulation of the water.

(a) There shall be no protrusions, extensions, or other means of entanglement or obstructions in the swimming area which can cause the entrapment or injury of the bather.

(b) There shall be construction tolerances allowed on all dimensional designs. Overall length, width and depth in the deep end of a swimming pool may vary plus or minus three inches. All other overall dimensions in a swimming pool and in a spa may vary plus or minus two inches, unless otherwise specified. The designed waterline shall have a maximum construction tolerance at the time of completion of the work of plus or minus one-fourth inch for pools and spas with adjustable weir surface skimming systems and of plus or minus one-eighth inch for pools and spas with nonadjustable surface skimming systems.

(c) The pool size shall be governed by the requirements of the activities for which the installation is intended.

(2) **Walls.** Walls shall not be more than eleven degrees from plumb for a minimum depth of two feet nine inches from the waterline in deep areas or two feet three inches in the shallow areas. Below these depths the wall may be radiused to join the floor. The finished construction tolerance for the wall slope shall be ±3 percent.

(3) **Floor Slopes.** Floor slopes shall comply with the following minimum standards:

(a) All slopes shall be uniform.

(b) The slope of the floor from the shallow end wall towards the deep end shall not exceed one foot in twelve feet to the point of the first slope change.

(c) The point of the first slope change shall be defined as the point at which the floor slope exceeds one foot in twelve feet and shall not occur at a depth of more than five feet.

(d) The slope of the floor from the point of the first slope change to the deep end shall not exceed one foot in three feet. Such slopes may not provide any less water depth than those specified if the pool is intended for diving.

(e) Transitional radius from wall to floor where floor slopes join the wall shall comply with the following:

1. The radius shall have its center no less than two feet nine inches below the waterline in deep areas or two feet six inches in the shallow area.

2. The radius shall be tangent at the point where the radius either meets the wall or the floor.

3. The radius (R) shall be at least equal to or greater than the depth of the pool minus the vertical wall depth measured from the waterline or tolerance allowed in DPH Rule 511-3-5-.05(2) minus three inches to allow draining to the main drain. (R minimum = Pool depth - Vertical wall depth - 3")

4. Walls shall intersect with the floor at an angle or a transition profile. Where a transitional profile is provided at water depths of three feet or less, a transitional radius shall not exceed six inches and shall be tangent to the wall and is permitted to be tangent to or intersect the floor.

(4) **Water depths.** Water depths at the shallow end of the swimming area shall be a maximum of three feet six inches except for competitive racing pools.

(a) The active area of a pool shall be visually set apart from, but may be adjoined to, the shallow area and shall not adjoin the deep area.

(b) The transition point or point of slope change of the pool from the active area to the shallow area and from the shallow area to the deep area and at the points of separation of diving, slide and amusement areas shall be visually set apart with a rope and float line, depth markers and a four inch minimum width row of floor tile, or similar means of a color contrasting with the bottom. In diving pools with a constant slope, the shallow area shall be visually set apart from the deep area with a rope and float line, depth markers and a four inch minimum width row of floor tile, or similar means of a color contrasting with the bottom. The health authority may waive the need for a rope and float line in swim-out areas or similar construction where deemed necessary.

(c) Starting platforms built after the adoption of this chapter shall be installed according to manufacturer's instructions and this section.

1. Starting platforms shall be installed in a minimum water depth of five feet.

2. The leading edge of starting platforms shall have a maximum height of 30 inches above the water surface.

3. Platforms shall have slip resistant tread surfaces.

(d) Starting platforms shall be used by swimmers certified for racing starts and under the direct supervision of a qualified coach or instructor.

(e) Starting platforms shall be removed, if possible, or prohibited from use during all recreational or non-competitive swimming activity by covering platforms with a manufacturer-supplied platform cover or with another means or device that is readily visible and clearly prohibits use.

(5) Diving areas in non-competitive pools shall conform to the minimum water depths, areas, slopes and other dimensions shown in DPH Rule 511-3-5-.05(7). If a wall exists, then it shall conform to the 5:1 slope in the Point D dimension and the $L_{1\text{-}2\text{-}3\text{-}4}$ dimensions and shall be installed in accordance with the manufacturer's instructions.

(6) Installation and use instructions for manufactured diving equipment shall be provided by the manufacturer and shall specify the minimum water dimensions required for each diving board and diving stand combination. The manufacturer's instructions shall refer to the water envelope type by dimensionally relating their products to Point A on the water envelopes referenced in subsection (b) below. The board manufacturer shall specify which boards fit on the design pool geometry types.

(a) When diving equipment is installed, it shall conform to the specifications set forth in DPH Rule 511-3-5-.06(7) and shall be located in the diving area of the pool so as to provide the minimum dimensions as shown in DPH Rule 511-3-5-.05(7).

(b) The tip of the diving equipment shall be located at Point A shown in the diagram in DPH Rule 511-3-5-.05(7)(a), which is the reference point of all other dimensions.

(c) There shall be a completely unobstructed clear vertical distance of thirteen feet above any diving board measured from the center of the front end of the board. This area shall extend horizontally at least eight feet behind, eight feet to each side and sixteen feet ahead of Point A shown in the diagram in DPH Rule 511-3-5-.05(7)(a).

(d) Public non-competitive pools with diving facilities in excess of three meters in height, or pools designed for platform diving, shall comply with the dimensional design requirements of the Federation Internationale de Natation Amateur (FINA), U.S. Diving, National Federation of State High School Associations (NFSHSA), or similar authority.

(7) **Minimum Dimensions for Diving Portion of Pools.**

(a) Diagram showing points where dimensions are measured. Note that the shallow portion of the pool is not shown.

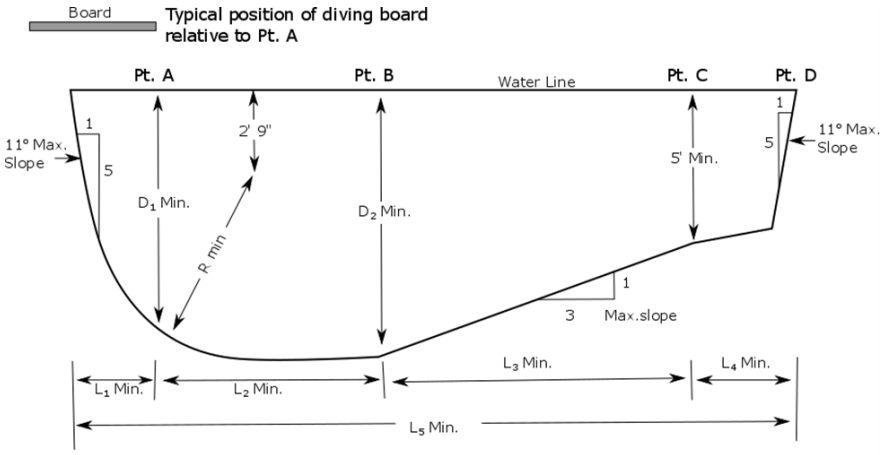

Note: L_4 is a minimum dimension to allow sufficient length opposite the board. This may of course be lengthened to form the shallow portion of the pool.

(b) Minimum dimensions for points given in diagram (a).

RELATED DIVING EQUIPMENT		MINIMUM DIMENSIONS								MINIMUM WIDTH OF POOL AT:		
MAX DIVING BOARD LENGHT	MAX BOARD HEIGHT OVER WATER	D_1	D_2	R	L_1	L_2	L_3	L_4	L_5	PT.A	PT.B	PT.C
10'	26"(2/3meter)	7'-0"	8'-6"	5'-6"	2'-6"	8'-0"	10'-6"	7'-0"	28'-0"	16'-0"	18'-0"	18'-0"
12'	30"(3/4 meter)	7'-6"	9'-0"	6'-0"	3'-0"	9'-0"	12'-0"	4'-0"	28'-0"	18'-0"	20'-0"	20'-0"
16'	1 Meter	8'-6"	10'-0"	7'-0"	4'-0"	10'-0"	15'-0"	2'-0"	31'-0"	20'-0"	22'-0"	22'-0"
16'	3 Meter	11'-0"	12'-0"	8'-6"	6'-0"	10'-6"	21'-0"	0	37'-6"	22'-0"	24'-0"	24'-0"

1. L2, L3, and L4 combined, represent the minimum distance from the tip of the board to pool wall opposite diving equipment.

2. Placement of boards shall observe the following minimum dimensions. With multiple board installations minimum pool widths must be increased accordingly.

   - Deck Level Board to Pool Side 8'
   - 1 Meter Board to Pool Side 10'
   - 3 Meter Board to Pool Side 11'
   - 1 Meter or Deck Level Board to 3 Meter Board 10'
   - 1 Meter or Deck Level Board to another 1 Meter or Deck Level Board 8'
   - 3 Meter to another 3 Meter Board 10'

(8) **Offset Ledges.** When provided, offset ledges shall fall within eleven degrees from plumb starting at the junction of the pool wall and waterline and shall have a slip-resistant surface. The outer two inch edge shall be lined with slip resistant tile in a contrasting color. The maximum width shall be eight inches. The typical allowable dimensions are based on the depths shown below.

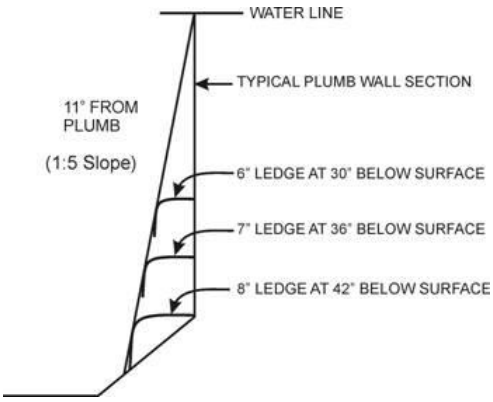

(9) **Underwater Seat Benches.** Underwater seat benches in pools, if provided, shall have a maximum horizontal seat bench depth of twenty inches below the waterline, be visually set apart by having the outer two inches of each seat lined with a slip-resistant tile in a contrasting color, and shall be located fully outside of the required minimum diving water envelope if the pool is intended for use with diving equipment..

(10) **Swimouts.** Swimouts shall be located in the shallow area of a pool outside of the perimeter and comply with all the following:

(a) The horizontal surface shall be not be more than twenty inches below waterline.

(b) An unobstructed surface shall be provided that is equal to or greater than that required for the top tread of the pool stairs in DPH Rule 511-3-5-.06(3).

(c) Where used as an entry and exit access, swimouts shall be provided with steps that comply with the pool stair requirement in DPH Rule 511-3-5-.06(3).

(d) The leading two inches of the outer edge shall be visually set apart with slip resistant tiles in a contrasting color.

(11) **Underwater/Tanning Shelf.** An underwater shelf used as the required entry or exit access shall be located not more than twelve inches below the waterline.

The leading two inches of the outer edge shall be visually set apart with contrasting tiles. The shelf surface area is excluded when determining the occupancy load.

(12) **Theoretical Peak Occupancy Load.** The theoretical peak occupancy for a public swimming pool shall be used for designing systems that serve bathers, and shall incorporate non-water related areas such as decking. This peak occupancy shall be the total number of bathers that are permissible on the deck and in the water at any given point in time.

(a) The theoretical peak occupancy shall be calculated by dividing the pool area in square feet by the density factor (D) representing the specific water types or devices and pool deck area.

(b) Use Table 1. Density Factors (D) in square feet to determine the theoretical peak occupancy.

Table 1. Density Factors (D) in square feet

Agitated Water in Shallow area or Shallow water or Wading area	Flat Water in Deep area or Deep water (not including the Diving Area)	Diving Area (per each diving board)	Entry Area for all other devices including slides	
Pools with minimal deck area	15 square feet per user	20 square feet per user	300 square feet per diving board	150 square feet per device
Pools with deck area at least equal to the water surface area	12 square feet per user	15 square feet per user	300 square feet per diving board	150 square feet per device
Pool with deck area at least twice the water surface area	10 square feet per user	12 square feet per user	300 square feet per diving board	150 square feet per device

(c) The theoretical peak occupancy calculations shall be calculated by adding the sums of the applicable figures from Table 1.

(d) A spa or hot water venue density factor shall not exceed one bather per ten square feet of surface area.

(e) A waterslide landing pool may use the manufacturer established capacity if given.

(13) **Wading Pool Water Depth.** Wading pools constructed after adoption of this chapter shall be separate and physically set apart from beginning or shallow water areas of swimming pools by at least fifteen feet of deck. Where a wading pool is adjacent to any deep water area, a minimum four foot high barrier shall be installed to separate the two pools.

(a) Wading pools shall have a maximum water depth of eighteen inches. Water depths may be reduced from the above maximums and brought to zero at the

most shallow point. The areas where the water depth at the edge of the pool exceeds nine inches shall be considered as non-entry areas.

(b) Walls in wading pools shall be vertical or within 11° of vertical except for the lower six inches which shall be radiused to the floor. Walls shall not extend more than six inches above the waterline at any point.

(c) Floors of wading pools shall be uniform and sloped to drain with a maximum slope of one foot in twelve feet vertical to horizontal.

(14) **Spa Water Depth.** The maximum water depth in a spa shall be four feet measured from the waterline. Exceptions may be made for spas designed for a special purpose.

(a) Multi-level seating in a spa may be provided, but the maximum water depth of any seat or sitting bench shall be twenty-eight inches measured from the waterline.

(b) The spa shall be provided with a suitable handhold around its perimeter in areas where water depths exceed three feet six inches. Handholds shall be provided no more than four feet apart and may consist of any one or a combination of the following options:

1. Coping, ledges, radiused flanges or decks along the immediate top edge of the spa shall provide a suitable slip-resistant handhold located not more than twelve inches above the waterline; or

2. Ladders, steps or seat ledges; or

3. A secured rope or railing at or not more than twelve inches above the waterline.

(c) The slope of the floor in a spa shall not exceed one foot in twelve feet vertical to horizontal.

Cite as Ga. Comp. R. & Regs. R. 511-3-5-.05
Authority: O.C.G.A. §§ 31-2A-6, 31-12-8, 31-45-10.
History. Original Rule entitled "Dimensional Design" adopted. F. Oct. 15, 2013; eff. Nov. 4, 2013.
Repealed: New Rule of same title adopted. F. Jan. 11, 2017; eff. Jan. 31, 2017.

Rule 511-3-5-.06. Decks and Deck Equipment.

(1) **Decks**. These requirements shall apply to all decks and deck equipment at the time of construction.

(a) Decks shall be designed and installed in accordance with the engineering practices required in the area of installation. Decks shall be constructed with a uniform and easily cleaned surface such as concrete, tile, manufactured or acrylic surfaces. This includes the design of sub base when required, concrete mix design, reinforcing, and joints, if a concrete deck is selected. In the absence of specific local engineering practices, the work shall be performed in accordance with the recommended practices of the latest edition of American Concrete Institute (ACI) Standard 302.1R-80,"Guide for Concrete Floor and Slab Construction or successor standard."

(b) Decking shall be flush with the lip of the pool, spa walls, and copings. Decks, ramps, coping and similar step surfaces shall be slip-resistant and easily cleanable.

(c) Special features in or on decks, such as markers or brand insignias, shall conform to this Chapter.

(d) Risers for steps for the deck shall be uniform and have a minimum height of three and three-fourths inches and a maximum height of seven and one-half inches. The minimum tread depth shall be twelve inches.

(e) Backfilled areas that support a deck shall be adequately compacted.

(f) The deck, including coping, shall have a minimum four feet width of continuous, unobstructed walking area maintained at all times unless otherwise allowed in the chapter.

(g) A minimum four foot deck width shall be provided on the sides and rear of any diving equipment or waterslide stairs. A deck clearance of forty-eight inches shall be provided around all deck equipment.

(h) The approved decking shall connect all site amenities, entrances, and exits.

(i) A four foot minimum continuous unobstructed deck, which may include the coping, shall be provided around at least 50 percent or more of a spa.

(j) The minimum slope of the decks shall be one-eighth inch per one foot vertical to horizontal.

(k) The maximum voids between adjoining concrete slabs, or between concrete slabs and expansion joint material, shall be three-sixteenths inch of horizontal clearance with a maximum difference in vertical elevation of one-fourth inch.

(l) Open joints or gaps larger than three-sixteenths inch wide or with vertical elevations exceeding 1/4 inches shall be rectified using appropriate fillers. Construction joints where pool coping meets the decks shall be watertight and shall not allow water to pass to the ground beneath.

(m) The areas where the decks join the pool and spa coping shall be designed and installed so as to protect the coping and its mortar bed from damage as a result of anticipated movement of adjoining decks.

(n) Joints in decks shall be provided to minimize the potential for cracks due to a change in elevations, separation of surfaces or movement of the slab.

(o) The areas where the decks join concrete work shall be protected by expansion joints to protect the pool adequately from the pressures of relative movements.

(p) Decks shall be edged, have a radius, or be otherwise relieved to eliminate sharp corners.

(q) Decks shall be sloped to effectively drain either to perimeter areas or to deck drains. Drainage shall remove pool and spa splash water, deck cleaning water, and rain water without leaving standing water of more than one-eighth inch depth twenty minutes after the cessation of the addition of water to the deck.

(r) Site drainage shall be provided to direct all perimeter deck drainage as well as general site and roof drainage away from the pool. When required, yard drains shall be installed to prevent the accumulation or puddling of site water in the general area of the decks and related improvements.

(s) There shall be no direct connection between the deck drains and the sanitary or storm sewer system, or the gutter or skimmer recirculation system.

(t) Wing walls or peninsulas less than eighteen inches in width shall not be considered a part of the deck.

(u) If a backwash sump is used, then an open pit or leaching design for backwash sump purposes shall be located so that it falls completely below adjacent decks and fully between a line projected 45° downward and away from such decks, or shall be designed to accommodate local soil conditions and the volume of backwash.

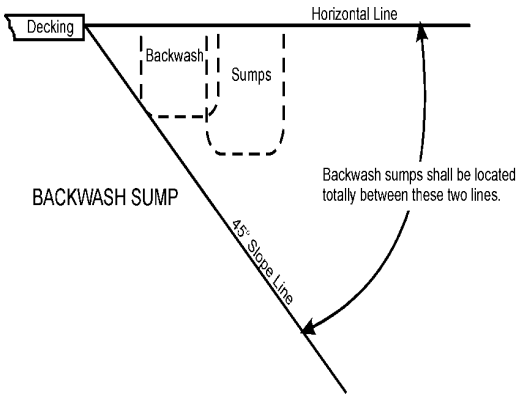

(v) Circulation system piping, other than that integrally included in the manufacture of the pool or spa, shall be subject to an induced static hydraulic pressure test (sealed system) at twenty-five pounds per square inch (psi) for at least fifteen minutes or longer if required by the local code official or health authority. This test shall be performed before the deck is poured and the pressure shall be maintained through the deck pour.

(w) Valves installed in or under any deck shall provide a minimum ten inch diameter access cover and valve pit to facilitate servicing.

(x) A hose bib and a vacuum breaker shall be provided for washing down the entire deck area and shall be located not more than one hundred-fifty feet apart. Water-powered lifts shall have a dedicated hose bib water source.

(y) The deck area will be kept clean of all trash and debris.

(z) Carpet, wood and artificial turf may not be used on the deck adjoining the pool. Additionally, loose plant material or bedding shall not be permitted on the deck area within four feet of the water surface area.

(2) **Entry/Exit.** All pools, except spas, shall have at least two means of entry/exit located so as to serve both ends of the pool and the deepest portion. These shall consist of ladders, stairs or recessed treads, or a walking entry, and may be used in combination. All treads shall have slip-resistant surfaces. Handicapped accessible entry/exit into the pool shall be designed and provided in accordance with federal, state or local requirements.

(a) Where water depths are twenty-four inches or less at the pool wall, such areas shall be considered as providing their own natural mode for entry/exit.

(b) For pools or water areas over thirty feet in width, each side of the deepest portions of the pool shall have its own entries/exits.

(c) For pools with water depths of more than five feet, a means of entry/exit for the shallow end shall be located between the shallow end wall and the cross section at Point C, while a means of entry/exit for the deep end shall be between the deep end wall and the cross section at Point B as shown in DPH Rule 511-3-5-.05(7).

(d) A means of entry/exit shall be provided at a minimum of every seventy-five linear feet of pool wall or fraction thereof.

(e) Stairs, ladders and recessed treads shall be located to not interfere with racing lanes if applicable.

(3) **Pool Stairs.** The design and construction of protruding and recessed pool stairs shall conform to the following:

(a) Step treads shall have a minimum unobstructed horizontal depth of ten inches and a minimum unobstructed surface area of two hundred forty square inches.

(b) Risers at the centerline of the treads shall have a maximum uniform height of twelve inches, with the bottom riser height allowed to vary from the floor to not more than twelve inches.

(c) The vertical distance from the pool coping, deck, or step surface to the uppermost tread shall not be greater than twelve inches.

(d) Where stairs are located in water depths of more than forty-eight inches, the lowest tread shall be not less than forty-eight inches below the deck and the stairs shall not protrude into the pool. The stairs shall be set back into the pool wall.

(e) The outer two inches of each step shall be marked with slip resistant tiles in a contrasting color.

(f) Each set of stairs shall be provided with at least one handrail to serve all treads and risers. Handrails shall conform to the following standards:

1. Handrails, if removable, shall be installed in such a way that they cannot be removed without the use of tools.

2. The leading edge of handrails facilitating stairs and pool entry/exit shall be no more than eighteen inches plus or minus three inches, horizontally from the vertical plane of the bottom riser (where applicable).

3. The outside diameter of handrails shall be between one and one quarter inch and two inches.

(g) Underwater seats, benches or swimouts may be provided as part of the stairs or recessed treads.

(h) Stairs wider than five feet shall have at least one additional handrail for every twelve feet of stair width or fraction.

(4) **Pool Ladders.** The design and construction of pool ladder(s) shall conform to the following standards:

(a) Pool ladders shall be made entirely of corrosion-resisting materials.

(b) Ladders shall provide two handholds or two handrails.

(c) Below the water level, there shall be a clearance of not less than three inches and not more than six inches between any ladders tread edge, measured from the pool wall side of the tread and the pool wall.

(d) The clear distance between ladder handrails shall be a minimum of seventeen inches and a maximum of twenty-four inches.

(e) There shall be a uniform height between ladder treads, with a seven inch minimum distance and a twelve inch maximum distance.

(f) Ladder treads shall have a minimum horizontal depth of two inches.

(5) **Recessed Treads.** The design and construction of recessed treads in the pool wall shall conform to the following standards:

(a) Recessed treads at the centerline shall have a uniform vertical spacing of twelve inches maximum and seven inches minimum.

(b) The vertical distance between the pool coping edge, deck or step surface and the uppermost recessed tread shall be a maximum of twelve inches.

(c) Recessed treads shall have a minimum depth of five inches and a minimum width of twelve inches.

(d) Recessed treads shall drain into the pool to prevent the accumulation of dirt.

(e) Each set of recessed treads shall be provided with a set of handrails, grabrails, or handholds to serve all treads and risers.

(f) The clear distance between handrails and grab rails shall be between seventeen and twenty-four inches.

(6) **Spa Entry/Exit.** Spas shall have a means of entry/exit at a minimum of every fifty feet or portion thereof, where water depths are more than twenty-four inches.

(a) DPH Rule 511-3-5-.06(4) and (5) shall apply to ladders and recessed treads in spas.

(b) Spas shall be equipped with at least one handrail (or ladder equivalent) for each fifty feet of perimeter or portion thereof, to designate the point of entry and exit.

1. Handrails shall be installed in such a way that they cannot be removed without the use of tools.

2. The leading edge of a handrail in the spa shall be no more than eighteen inches plus or minus three inches horizontally from the vertical plane of the bottom riser (where applicable).

3. The outside diameter of handrails shall be between one and one-quarter inch and two inches.

(c) The design and construction of spa steps and seat benches, where used, shall conform to the following standards:

1. Step treads shall have a minimum unobstructed horizontal depth of ten inches for a minimum continuous width of twelve inches. Step treads shall have slip-resistant surfaces.

2. Riser heights shall not be more than twelve inches. Where the bottom tread serves as a bench or seat, the bottom riser may be a maximum of fourteen inches above the spa floor.

3. The first and last risers need not be uniform but shall comply with riser height requirements as noted above. The (top riser is measured from the finished deck.

4. Intermediate risers, those between the first and last risers, shall be uniform in height.

5. Each set of steps shall be provided with at least one handrail to serve all treads and risers.

6. The outer two inch edge of each step shall be marked with slip resistant tiles in a contrasting color.

(7) **Supports for Diving Equipment.** Supports, platforms, stairs and ladders for diving equipment shall be designed to carry the anticipated loads. Stairs and ladders shall be of corrosion-resisting material, easily cleanable and with slip-resistant tread.

(a) All diving stands higher than twenty-one inches as measured from the deck to the top butt end of the board shall be provided with stairs or a ladder. Step treads shall be self-draining.

(b) Platforms and diving equipment of one meter or higher shall be protected with guard rails which shall be at least thirty inches above the diving board and extend to the edge of the pool wall. All platforms or diving equipment higher than one meter shall have guard rails which are at least thirty-six inches above the diving board and extend to the edge of the pool wall.

(8) **Diving Equipment.** Diving equipment shall be designed for swimming pool use and shall be installed in accordance with the manufacturer's recommendations.

Diving boards shall be permitted only when the diving envelope conforms to the standards of the certifying agency that regulates competitive diving at the facility or, if designed for noncompetitive diving, shall follow this section.

(a) Diving equipment manufacturers shall provide installation instructions and specifications with each unit.

(b) A label shall be permanently affixed to the diving equipment or jump board and shall include:

1. Manufacturer's name, identification and address,

2. board equipment length,

3. identification as to diving or jump board,

4. fulcrum setting specifications (if applicable),

5. minimum water envelope required for each diving board and diving stand combination,

6. date of manufacture, and

7. maximum weight of the user.

(c) Diving equipment shall have slip-resistant tread surfaces.

(d) Diving equipment shall be permanently anchored to the pool deck. The edge of the board at the tip end shall be level with the water surface. The tip end of the board over the pool water surface may be higher than the butt end of the board.

(e) Maximum board height over the water shall have plus three inches tolerance.

(f) The maximum construction tolerance of the tip of the board from Point A as shown in DPH Rule 511-3-5-.05(7) shall be plus or minus three inches. The diving equipment shall be in compliance with DPH Rule 511-3-5-.05(6).

(9) **Pool slides.** The requirements of the U.S. Consumer Product Safety Commission Standard for Swimming Pool Slides as published in the Code of Federal Regulations, 16 CFR Part 1207, shall be used for standards relating to swimming pool slides. Installation and use instructions shall be provided with each unit by the manufacturer.

(10) **Play structures and other equipment.** Play structures and other equipment shall meet all requirements set by appropriate authorities such as building codes, the U.S. Consumer Product Safety Commission, ASTM standards, and amusement ride regulations.

(11) **Bridges**. Bridges spanning a pool or any other structures not intended for interactive play shall have a minimum clearance of seven feet from the bottom of the structure to the bottom of the pool and a minimum height of four feet above the water surface. A bridge shall have a minimum forty-two inch high barrier on both sides and a slip

resistant walking surface constructed of concrete or a non-absorbent material. A "no diving and no-jumping" sign shall be placed at both ends of the bridge.

Cite as Ga. Comp. R. & Regs. R. 511-3-5-.06
Authority: O.C.G.A. §§ 31-2A-6, 31-12-8, 31-45-10.
History. Original Rule entitled "Decks and Deck Equipment" adopted. F. Oct. 15, 2013; eff. Nov. 4, 2013.
Repealed: New Rule of same title adopted. F. Jan. 11, 2017; eff. Jan. 31, 2017.

Rule 511-3-5-.07. Circulation Systems.

(1) A circulation system consisting of pumps, piping, return inlets and suction outlets, filters and other necessary equipment shall be provided for complete circulation of water through all parts of the pool.

(a) The equipment for a swimming pool shall be of adequate size to turn over the entire pool water capacity. The turnover rate for pools constructed after the adoption of this chapter shall not exceed the sum of one and one-half times the average water depth in feet; where the number of hours is equal to the number feet calculated, or exceed once every six hours whichever is less. Unless the rate is otherwise specified in subsection (b) below. This system shall be designed to give the proper turnover rate based on the manufacturer's recommended maximum pressure flow of the filter in dirty media condition of the filter, immediately prior to cleaning the filter.

(b) Turnover rates for pools by type listed below:

Type	Turnover Rate
1. Activity Pools	2 hours
2. Continuous Water Channels	1 hours
3. Dual Use Swimming Pools (swimming pools with a water slide and/or one other feature with an average depth exceeding 24 inches)	4 hours
4. Diving Pools	8 hours
5. Interactive Water Play Pools/Spray Pads	30 minutes
6. Landing Pools, Flumes, Slides and All Other Plunge Pools	60 minutes
7. Leisure Rivers	2 hours
8. Spas/Exercise Spas	30 minutes
9. Wading Interactive Pools (maximum depth, 18 inches)	60 minutes
10. Wading Pools (without any interactive equipment)	60 minutes

11. Water Attraction/Equipment Pump Reservoir Tanks	30 minutes
12. Wave Pools	2 hours

(c) Timing devices will be allowed for the purpose of turning down the circulation system during times when a pool is not being used. Timing devices must be set to provide at least one complete turnover immediately prior to the pool reopening.

1. The system flowrate shall not be reduced more than 25% lower than the minimum design flowrate requirement and only reduced when the pool is unoccupied.

2. The system flowrate shall ensure the minimum water clarity required under the chapter is met before opening to the public.

3. The system shall be required to maintain required disinfectant and pH levels at all times.

(d) For spas, a minute timer that does not exceed 15 minutes shall be connected to the agitation system. The timer shall be located out of reach of a bather in the spa.

(e) Water clarity shall be maintained. When standing at the pool's edge at the deep end, the main drain suction outlet covers or a four inch by four inch square marker tile in contrasting color shall be clearly visible. When standing at a spa's edge, the deepest portion of the spa floor shall be visible when the water is still.

1. For pools over ten feet deep an eight inch by eight inch square marker tile in a contrasting color to the pool floor shall be visible at the deepest part of the pool.

2. This reference point shall be visible at all times from the edge of the deck.

(f) Circulation system components which require replacement or servicing shall be accessible for inspection, repair or replacement and shall be installed in accordance with the manufacturer's instructions.

(g) Where equipment sizing falls within the scope of NSF testing, materials and equipment used in the circulation system shall comply with the appropriate requirements of NSF Standard 50.

(h) Equipment used for a public pool shall be properly supported to prevent damage from misalignment or settlement. The equipment shall be mounted so as to minimize the potential for the accumulation of debris and moisture, following manufacturer's instructions.

(2) **Water Velocity.** The water velocity in the pool or spa piping for discharge piping shall not exceed eight feet per second and for suction piping, shall not exceed six feet per second.

(a) Pool and spa piping shall be sized to permit the rated flows for filtering and cleaning without exceeding the maximum head of the pump.

(b) The pump shall be sized to deliver the required flow rate against the total system head involved.

(3) **Piping and Fittings.** The circulation system piping and fittings shall be nontoxic, shall be considered to be process piping, and shall be of material able to withstand operating pressures and operating conditions.

(a) Pool and spa piping subject to damage by freezing shall have a uniform slope in one direction equipped with valves for adequate drainage. Pool and spa piping shall be supported at sufficient intervals to prevent entrapment of air, water, or dirt. Provisions shall be made for expansion or contraction of pipes. All piping shall comply with NSF Standard 14 or other applicable standards.

(b) Equipment shall be designed and fabricated to drain the pool or spa water from the equipment, together with exposed face piping, by removal of drain plugs and manipulating valves or by other methods. Refer to manufacturer's recommendations for specific information on draining the system.

(4) **System Condition.** Gauges shall be provided as follows:

(a) A pressure or vacuum gauge or other means of indicating system condition shall be provided in the circulation system in an easily readable location.

(b) A flow meter measuring the rate of flow through the filter system with an appropriate range readable in gallons per minute (GPM) and accurate within ten percent actual flow shall be provided. The flow indicator shall be capable of measuring from one-half to at least one and one-half times the design flow rate. The gauge shall be located after the filtering equipment and in such location on the return line, so as to measure the total amount of water returning to the pool according to the manufacturer's installation specifications.

(5) **Water Clarity and Chemistry.** The circulation system shall be capable of maintaining water clarity and water chemistry requirements and shall operate twenty-four hours per day, except as otherwise provided in this Chapter.

(6) **Instructions.** Written operation and maintenance instructions shall be provided for the circulation system.

Cite as Ga. Comp. R. & Regs. R. 511-3-5-.07
Authority: O.C.G.A.§§ 31-2A-6, 31-12-8, 31-45-10.

History. Original Rule entitled "Circulation Systems" adopted. F. Oct. 15, 2013; eff. Nov. 4, 2013.
Repealed: New Rule of same title adopted. F. Jan. 11, 2017; eff. Jan. 31, 2017.

Rule 511-3-5-.08. Filters.

(1) **Design.** Filters shall be designed and maintained so as to provide the water clarity noted in DPH Rule 511-3-5-.07(1)(e).

(a) Filters shall be listed per NSF Standard 50 with the specific maximum flow rates per surface area based on media used.

(b) The following filtration rates for the specific media shall be used in determining the filter area required for the circulation system:

1. High-rate granular media filters shall be designed to operate at no more than fifteen gallons per minute per square foot when a minimum bed depth of fifteen inches is provided per manufacturer. When a bed depth is less than fifteen inches, filters shall be designed to operate at no more than twelve gallons per minute per square foot.

2. The design filtration rate for surface-type cartridge filters shall not exceed three-tenths gallons per minute per square foot. One complete set of spare cartridges shall be maintained on site in a clean and dry condition.

3. The design filtration rate for pre-coat filters shall be based on the following types:

(i) Vacuum pre-coat filters shall not be more than either two gallons per minute per square foot, or two and one half gallons per minute per square foot when used with a continuous pre-coat media feed.

(ii) Pressure pre-coat filters shall not be more than two gallons per minute per square foot of effective filter surface area.

(iii) The filtration surface area shall be based on the outside surface area of the media with the manufacturer's recommended thickness of pre-coat media and consistent with their NSF Standard 50 listing and labeling.

(c) Filters shall be designed so that filtration surfaces can be inspected and serviced.

(d) Alternate types of filter media shall be listed and labeled to NSF Standard 50.

(2) **Internal Pressure.** On pressure-type filters, a means shall be provided to permit the release of internal pressure.

(a) Any filter incorporating an automatic internal air release as its principal means of air release shall have lids which provide a slow and safe release of pressure as a part of its design.

(b) Any separation tank used in conjunction with any filter tank shall have a manual means of air release or a lid which provides a slow and safe release of pressure as it is opened as a part of its design.

(c) Influent and effluent pressure gauges (if both are present in the system) shall have the capability to measure up to twenty pounds per square inch increase in the differential pressure across the filter bed in increments of one pound per square inch or less.

(3) **Instructions.** Pressure filters and separation tanks shall have operation and maintenance instructions permanently installed on the filter or separation tank and shall include a precautionary warning statement not to start up the system after maintenance without first opening the air release and properly reassembling the filter and separation tank. The statement shall be visible and noticeable within the area of the air release.

(4) **Piping.** Piping furnished with the filter shall be of suitable material capable of withstanding one and one-half times the working pressure. The suction piping shall not collapse when there is a complete shutoff of flow on the suction side of the pump.

(5) A sight glass shall be installed on the waste discharge line of pressure filters so that the progress of filter washing can be observed.

(6) All piping shall be marked with directional arrows as necessary to determine flow direction. All piping in the equipment room shall be permanently identified by its use and the pool and or aquatic feature it serves.

Cite as Ga. Comp. R. & Regs. R. 511-3-5-.08
Authority: O.C.G.A. §§ 31-2A-6, 31-12-8, 31-45-10.
History. Original Rule entitled "Filters" adopted. F. Oct. 15, 2013; eff. Nov. 4, 2013.
Repealed: New Rule of same title adopted. F. Jan. 11, 2017; eff. Jan. 31, 2017.

Rule 511-3-5-.09. Pumps and Motors.

(1) **Sizing.** A pump and motor shall be provided for circulation of the pool and spa water. Performance of all pumps shall meet or exceed the conditions of flow required for filtering and cleaning (if applicable) the filters against the total dynamic head developed by the complete system. Where applicable pumps shall comply with the NSF International Standard 50 or Underwriters Laboratories (UL) Standard 1081.

(2) **Strainer or Screen.** With all pressure filter systems, a cleanable strainer or screen shall be provided upstream of the circulation pumps to remove solids and debris such as hair and lint.

(3) Pumps and motors shall be accessible for inspection and service.

(4) **Safe Operation.** The design and construction of the pumps and component parts shall provide for safe operation.

(5) **Pump Seal.** Where a mechanical pump seal is provided, components of the seal shall be corrosion-resisting and capable of operating under conditions normally encountered in pool operation.

(6) **Capability.** Motors shall be capable of operating the pump under full load with a voltage variation of plus or minus ten percent from the nameplate rating. If the maximum service factor of the motor is exceeded (at full voltage), the manufacturer shall indicate this on the pump curve.

(7) **Overload Protection.** All motors shall have thermal or current overload protection, either built in or in the line starter, to provide locked rotor and running protection.

(8) If the pump is below the waterline, valves shall be installed on permanently connected suction and discharge lines, located in an accessible place outside the walls of the pool, where they shall be readily and easily accessible for maintenance and removal of the pump.

(9) Pressure or vacuum gauges shall be installed on all public pools and spas.

   (a) The pump vacuum gauge shall be installed as close to the suction side of the pump as possible while still maintaining an accurate reading.

   (b) The pressure gauge shall be installed downstream from the pump, on the face piping ahead of the filter or on top of the filter in the area of greatest filter pressure.

Cite as Ga. Comp. R. & Regs. R. 511-3-5-.09
Authority: O.C.G.A. §§ 31-2A-6, 31-12-8, 31-45-10.
History. Original Rule entitled "Pumps and Motors" adopted. F. Oct. 15, 2013; eff. Nov. 4, 2013.
Repealed: New Rule of same title adopted. F. Jan. 11, 2017; eff. Jan. 31, 2017.

Rule 511-3-5-.10. Return Inlets and Suction Outlets.

(1) **Location.** Return inlets shall be installed and arranged to produce a uniform circulation of water and maintain a uniform disinfectant residual throughout the pool or spa. Where

skimmers are used, the return inlets shall be located so as to help bring floating particles within range of the skimmers.

(a) Pools shall use wall or floor inlets that are adequate in design, number and location to provide adequate mixing.

(b) A swimming pool shall have a minimum of two return inlets regardless of pool size.

(c) The total number of return inlets shall be based on one inlet per three hundred square feet of pool surface area or one inlet for every twenty feet of pool perimeter or fraction thereof, whichever is greater. The return inlets placement shall be as follows:

1. Wall inlets shall be placed within five feet of each pool corner and at least five feet from a skimmer.

   (i) Wall return inlets for the circulation system shall be designed to include directionally adjustable fitting to provide effective distribution of water.

   (ii) The fitting shall not constitute a hazard to the user.

2. Floor return inlets must be used on pools more than fifty feet in width based on the following placement:

   (i) Floor inlets shall be spaced to effectively distribute the treated water throughout the pool.

   (ii) Distance between floor inlets shall be no more than twenty feet.

   (iii) A row of floor inlets shall be located within fifteen feet of each side wall.

   (iv) Floor inlets shall be flush with the bottom of the pool.

   (v) Floor inlets used in combination with wall inlets shall be spaced no more than twenty-five feet from the nearest side walls.

3. For an aquatic facility with multiple pool types in combination using the same body of water, inlets shall meet the chapter's placement criteria and be hydraulically sized to provide the required turnover rate for each pool type.

4. Inlets shall be placed in each recessed or isolated area of the pool.

5. Wall inlets shall not be required to provide directional flow if part of a manufactured gutter system in which the filtered return water conduit is contained within the gutter structure.

(2) Location. All pools shall be provided with at least two main drain suction outlets with sumps in the lowest point of the pool floor or other approved methods.

(a) The main drain system shall be designed at a minimum to handle recirculation flow of 100% of total design recirculation flow rate. The branch pipe from each main drain outlet shall be designed to carry 100% of the recirculation flow rate

(b) The spacing of the main drains shall be at least three feet apart, but not more than twenty on centers nor more than fifteen feet from each side wall.

(c) Three or more suction outlets are subject to the three feet spacing requirement measured from the centerline between the outermost suction outlets.

(3) All spas shall have a minimum of two suction outlets provided for each pump in the suction outlet system, separated by a minimum of three feet or located on two different planes; e.g., one on the bottom and one on the vertical wall, or one each on two separate vertical walls. These suction outlets shall be plumbed such that water is drawn through them simultaneously through a common line to the pump.

(4) Suction outlets shall be provided with a cover that has been tested and approved by a nationally recognized testing laboratory and shall comply with the current ANSI/APSP-16, Suction Fittings For Use in Swimming Pools, Wading Pools, Spas, and Hot Tubs or a successor standard and the following:

(a) Where three or more main drain suction outlets are connected by branch piping, the flow through each branch pipe from each main drain suction outlet shall be calculated as follows:

1. Quantity (Q) of flow (gpm) maximum for each drain = total design flowrate (DFR)) divided by number of drains (N) minus one drain, or

2. Q(gpm per drain) = DFR/(N-1).

(b) The suction outlets shall be connected to a single main suction pipe by branch lines piped to provide hydraulic balance between the drains.

(c) The branch lines shall not be valved so as to be capable of operating independently.

(d) All covers/grates shall be in the same body of water.

(e) Each suction outlet cover shall be attached to a properly manufactured or field fabricated sump that meets ANSI/APSP 16 or successor standard.

(f) The maximum flow on the pump's curve shall be used to select the cover.

(g) Field fabricated suction outlets must be designed and certified by a registered professional engineer to comply with ANSI/APSP 16 or successor standard.

1. Field fabricated suction outlet covers or grates must provide sufficient area so that the maximum velocity of the water passing the grate will not exceed one and one-half feet per second.

2. The field fabricated sumps shall be built so that the opening of the suction pipe will be no closer than one and one-half times the inside pipe diameter from the bottom of the listed suction outlet cover/grate or in accordance with the standard or manufacturer instructions.

3. The width of openings in grating shall be not less than on eight inch and not more than one half inch. The pool or spa shall not be operated if the outlet grate is missing, broken or secured in such a way that it can be removed without the use of a tool.

(5) **Entrapment Avoidance.** If the suction outlet system, such as a filtration system, booster system, automatic cleaning system, or solar system, has a single suction outlet or multiple suction outlets which can be isolated, each suction outlet shall protect against user entrapment by installing a cover/grate that complies with ANSIAPSP- 7 Standard for Suction Entrapment Avoidance in Swimming Pools, Wading Pools, Spas, Hot Tubs, and Catch Basins or successor standard and as many of the following as necessary:

(a) A safety vacuum release system that has been tested by a nationally recognized independent third party and found to conform to ANSI/ASME standard A112.19.17 or ASTM standard F2387 and installed in accordance with manufacturers' instructions.

(b) A suction-limiting vent system designed by a professional engineer,

(c) A gravity drainage system designed by a professional engineer,

(d) Automatic pump shut off system that has been tested by a nationally recognized independent third party and found to conform to a recognized standard,

(e) Other means determined to be equally effective by the Department meeting the requirements of an applicable ASME/ANSI, ASTM or a Consumer Product Safety Commission standard.

(6) Where provided, the vacuum cleaner fittings shall be located in an accessible position between six and eighteen inches below the minimum operating water level or as an attachment to the skimmer(s).

(7) The vacuum line shall be protected with a self-closing, self-latching fitting that complies with the current IAMPO SPS 4- Special Use Suction Fitting for Swimming Pools, Spas and Hot Tubs.

Cite as Ga. Comp. R. & Regs. R. 511-3-5-.10
Authority: O.C.G.A. §§ 31-2A-6, 31-12-8, 31-45-10.
History. Original Rule entitled "Return Inlets and Suction Outlets" adopted. F. Oct. 15, 2013; eff. Nov. 4, 2013.
Repealed: New Rule of same title adopted. F. Jan. 11, 2017; eff. Jan. 31, 2017.

Rule 511-3-5-.11. Surface Skimmer Systems.

(1) A surface skimming system shall be provided on all swimming pools and spas and shall be designed and constructed to skim the pool or spa surface when the water level is maintained within the operational parameters of the system's rim or weir device. Surface skimming devices shall comply with NSF Standard 50.

(2) Skimming devices shall be designed and installed so as not to constitute a hazard to the user.

(3) **Automatic Surface Skimmers.** Where automatic surface skimmers are used as the sole overflow system in pools, at least two surface skimmers shall be provided for the first four hundred square feet or fraction thereof of the water surface area and one skimmer shall be provided for each additional four hundred square feet of surface area. In spas, one skimmer shall be provided for each one hundred square feet of surface area.

(a) Nominal recessed areas such as stairs and swimouts, shall not be considered in the calculation.

(b) When skimmers are used, they shall be located to maintain effective skimming action over the entire surface of the pool or spa.

(c) The skimmer flow rate shall not be less than twenty- five gallons per minutes or more than fifty-five gallons per minutes unless they are based on the manufacturer's design specifications. The flow rate for the skimmers shall comply with manufacturer data plates or NSF/ANSI 50 including Annex K.

(d) Each skimmer shall have a weir that adjusts automatically to variations in water level over a minimum range of four inches.

(e) Each skimmer shall be equipped with a trimmer valve capable of distributing the total flow between individual skimmers.

(f) The skimmer equalizer lines, when used, shall be located on the wall with the center no more than eighteen inches below the maximum operating level.

(g) The skimmer equalizer lines shall be protected by an approved cover/grated with a flow rating equal the maximum system flow divided by the number of skimmers in the system or the maximum flow rating of the skimmer, whichever is greater.

(h) Additional skimmers may be required to achieve effective skimming under site-specific conditions.

(i) The base of each skimmer shall be level with all other skimmers in the pool within a tolerance of plus or minus one-half inch.

(4) **Perimeter Surface Skimmer (Gutter).** Where a perimeter type surface skimming system is used as the sole surface skimming system, this system shall extend completely around the perimeter of the pool except at steps or recessed ladders.

(a) The lip of the gutter shall be level and shall be designed to serve as a handhold for bathers.

(b) The perimeter surface skimming system shall be connected to the circulation system with a system surge capacity of not less than one gallon for each square foot of pool surface or two and one half gallons for each square foot of spa surface.

(c) The hydraulic capacity of the overflow system shall be capable of handling one hundred percent of the circulation flow.

(d) Gutters shall be level within a tolerance of plus or minus one-sixteenth inch around the perimeter of the pool.

(e) Automatic makeup water supply equipment shall be provided to maintain continuous skimming of pools with perimeter overflow systems.

(f) Makeup water shall be supplied through an air gap or other approved backflow prevention device.

Cite as Ga. Comp. R. & Regs. R. 511-3-5-.11
Authority: O.C.G.A. §§ 31-2A-6, 31-12-8, 31-45-10.
History. Original Rule entitled "Surface Skimmer Systems" adopted. F. Oct. 15, 2013; eff. Nov. 4, 2013.
Repealed: New Rule of same title adopted. F. Jan. 11, 2017; eff. Jan. 31, 2017.

Rule 511-3-5-.12. Lighting and Electrical Requirements.

(1) **Artificial Lighting.** Artificial lighting shall be provided for all indoor and outdoor pools and spas. Lighting shall be adequate to illuminate the entire swimming pool enclosure without glare. All installations shall comply with local building code requirements.

Ground-fault interrupters must be provided. Lighting in dressing rooms, sanitary facilities, equipment rooms and concessions shall comply with local code requirements.

(a) **Water Surface and Deck Area Illumination.** The water surface and deck area light levels shall meet the following minimum illumination levels:

1. An indoor pool water surface and deck: thirty horizontal foot-candles.

2. An outdoor pool deck: ten horizontal foot-candles.

3. An outdoor pool water surface with underwater lighting: ten horizontal foot-candles.

4. An outdoor pool water surface without underwater lighting: fifteen horizontal foot-candles.

(b) Underwater lighting is not required. However, if underwater lighting is used, then the following shall apply:

1. A minimum of eight lumens per square foot of water surface area must be provided in conjunction with overhead or equivalent deck lighting.

2. Underwater lights, in conjunction with overhead or equivalent deck lighting, shall be located to provide the required illumination so that all portions of the pool, including the pool bottom and main drain suction outlets, may be readily seen.

3. Dimmable or color lighting shall not be used for underwater lighting.

(c) Illumination shall render all portions of the pool, including the pool bottom and main drain suction outlets, readily visible.

(d) More light may be required as deemed necessary by the Health Authority or by other codes which apply.

(e) The lighting shall be evenly spaced around the pool to prevent glare.

(f) Higher underwater light levels shall be considered for deeper water to achieve the outcome. This must be approved by the professional engineer or architect.

(2) For outdoor pools, when not being used for night swimming or recreation, a minimum of three foot candles shall be maintained at the surface of pool and deck areas. Motion detector type lights are acceptable.

(3) No switches, starters, panel boards or similar electrical equipment shall be located in areas readily accessible to bathers while in the pool or on the designated deck area.

(4) No overhead wiring shall pass within twenty feet (horizontal distance) of the pool enclosure.

(5) No electrical outlets shall be located within ten feet of the pool edge.

(6) Public swimming pools that operate outside of daylight hours shall be provided with sufficient emergency lighting to permit evacuation of the pool and securing of the area in the event of power failure. The emergency lighting intensity shall be not less than one foot candle at the water surface and the walking surface of the deck.

(7) Color lighting is prohibited for use as pool deck and water surface illumination.

Cite as Ga. Comp. R. & Regs. R. 511-3-5-.12
Authority: O.C.G.A. §§ 31-2A-6, 31-12-8, 31-45-10.
History. Original Rule entitled "Lighting and Electrical Requirements" adopted. F. Oct. 15, 2013; eff. Nov. 4, 2013.
Repealed: New Rule of same title adopted. F. Jan. 11, 2017; eff. Jan. 31, 2017.

Rule 511-3-5-.13. Heaters and Temperature Requirements.

(1) **Sizing.** Heaters, when used, shall be properly sized according to the volume of water, square footage of surface area, and manufacturer's recommendations.

(2) **Water Temperature.** The owner/operator shall routinely check the in-pool or in-spa water to ensure that the temperature does not exceed 104°F.

(a) If adjustments are necessary, those adjustments shall be performed in accordance with manufacturer's instructions or by a qualified technician.

(b) An annual gas fired inspections shall be performed by a qualified professional.

(c) A thermometer shall be available to measure the temperature of the water. It shall be attached or available to the operator at all times.

(3) **Installation.** The heater shall be installed in accordance with state and local codes as well as the manufacturer's recommendations.

(a) **Support.** The heater shall be installed on a surface with sufficient structural strength to support the heater when it is full of water and operating. The heater shall be level and not able to move after plumbing, gas, and electrical connections are completed.

(b) **Ventilation.** Fossil fuel heaters shall have adequate ventilation in order to assure proper operation.

(c) **Make Up Air.** Make up air shall be sufficient for proper operation.

Cite as Ga. Comp. R. & Regs. R. 511-3-5-.13
Authority: O.C.G.A. §§ 31-2A-6, 31-12-8, 31-45-10.
History. Original Rule entitled "Heaters" adopted. F. Oct. 15, 2013; eff. Nov. 4, 2013.
Repealed: New Rule entitled "Heaters and Temperature Requirements" adopted. F. Jan. 11, 2017; eff. Jan. 31, 2017.

Rule 511-3-5-.14. Air Blower and Air Induction Systems.

(1) **Entry Devices.** This rule pertains to all devices and systems which induce or allow air to enter the spa either by means of a power pump or passive design.

(2) **Air Intake Source.** Air intake sources shall not induce water external to the spa unit, dirt, or contaminants into the spa.

(3) **Make Up Air.** An air blower installed within an enclosure or indoors shall have adequate ventilation. The air induction system shall be installed in accordance with any applicable codes and the manufacturer's recommendation for air openings to the enclosure.

(4) **Accessibility.** The air blower shall be accessible for inspection and service.

(5) **Air Passages.** Integral air passages shall be pressure tested at the time of manufacture to provide structural integrity to a value of one and one-half times the intended working pressure.

Cite as Ga. Comp. R. & Regs. R. 511-3-5-.14
Authority: O.C.G.A. §§ 31-2A-6, 31-12-8, 31-45-10.
History. Original Rule entitled "Air Blower and Air Induction Systems" adopted. F. Oct. 15, 2013; eff. Nov. 4, 2013.
Repealed: New Rule of same title adopted. F. Jan. 11, 2017; eff. Jan. 31, 2017.

Rule 511-3-5-.15. Water Supply and Wastewater Disposal.

(1) The water supply for public pools and spas, showers, lavatories, drinking fountains and any other uses in conjunction with the public pool shall be from an approved and potable source and shall be approved by the local health authority before use. Water in the pool shall meet the requirements of DPH Rule 511-3-5-.17 before the pool may be used by bathers.

(2) No direct mechanical connection shall be made between the potable water supply and the swimming pool, chlorinating equipment, or the system of piping for the pool, unless it is protected against backflow and back-siphonage through an air gap meeting the latest ANSI/ASME standard A112.1.2 and the International Plumbing Code or other equivalent means approved by the health authority.

(3) An over-the-rim spout, if used, shall be located under a diving board, adjacent to a ladder or otherwise properly shielded so as not to create a hazard. Its open end shall have no sharp edges and shall not protrude more than two inches beyond the edge of the pool. The open end shall be separated from the water by an air gap of at least one and one-half pipe diameters measured from the pipe outlet to the rim.

(4) Backwash water may be discharged into a sanitary sewer through an approved air gap or into an approved subsurface disposal system or by other means approved by the health authority.

(5) Backwash water shall not be returned to the public swimming pool, equipment reservoir or surge tank. Use of backwash water for other purposes must meet state or local law or ordinances.

(6) Where necessary, filter backwash water shall be diverted to a settling tank to eliminate diatomaceous earth and contaminants in the water that exceed the limits set by the state or local water authority.

(7) If required by the water authority, pool water may require neutralizing before being completely drained into a sanitary sewer.

Cite as Ga. Comp. R. & Regs. R. 511-3-5-.15
Authority: O.C.G.A. §§ 31-2A-6, 31-12-8, 31-45-10.
History. Original Rule entitled "Water Supply" adopted. F. Oct. 15, 2013; eff. Nov. 4, 2013.
Repealed: New Rule entitled "Water Supply and Wastewater Disposal" adopted. F. Jan. 11, 2017; eff. Jan. 31, 2017.

Rule 511-3-5-.16. Disinfectant Equipment and Chemical Feeders.

(1) Disinfectant equipment and chemical feeders, such as flow-through chemical feeders, electrolytic chemical generators, mechanical chemical feeders, chemical feed pumps, and automated controllers shall comply with the requirements of NSF Standard 50.

(2) The disinfection equipment shall be capable of precisely delivering a sufficient quantity of a registered disinfecting agent in the appropriate amount as outlined in (3) in this section and maintain the residual concentrations in DPH Rule 511-3-5-.17 of this Chapter.

(a) Every pool and spa shall be required to have at least one unit of disinfectant agent equipment that introduces the agent through the circulation system in compliance with this rule

1. Additional units may be required to maintain chemical and physical parameters of the pool water for new construction or an existing facility, if

deemed necessary by the health authority or as required in DPH Rule 511-3-5-.16(2)(3).

2. Increased risk public pools constructed or remodeled after the adoption of this chapter shall deliver, monitor and control disinfectant and pH chemical feeders through an automated chemical controller.

3. Increased risk public pools constructed after the adoption of this chapter shall be required to use an NSF Standard 50 approved supplemental disinfection treatment system such as ozone or ultraviolent light (UV).

(b) The pool or spa water shall be continuously disinfected by a disinfecting agent that imparts an easily measured residual. The disinfecting agent used shall be subject to field testing procedures that are simple and accurate.

(c) Gaseous chlorine, chlorine compounds, bromine compounds or other bactericidal agents shall be acceptable when meeting the disinfectant level parameters outlined in DPH Rule 511-3-5-.17 of this Chapter. Other disinfectant agents not outlined in DPH Rule 511-3-5-.17 may be used if,

1. The owner/operator provides test results to the health authority that show the agent to be an adequate disinfectant for swimming pool and spa use, and

2. A test kit for these other agents is supplied to the health authority by the manufacturer or the pool owner.

(d) All disinfectant agents shall be registered by the U.S. Environmental Protection Agency.

(e) Where water is drawn from the pool to supply water to aquatic features the water may be reused prior to filtration if;

1. The disinfectant and pH levels of the supply water are maintained at required levels and the ratio of interactive play feature, slide, or other apparatus unfiltered water to filtered water circulated in the reservoir or pool shall be no more than 3:1 in order to maintain the efficiency of the filtration system, or

2. The apparatus or device shall use only water that has been filtered and disinfected immediately prior to being discharged into the pool. This includes, but is not limited to, slides, fountains, water wheels,"mushrooms", and squirt guns.

(f) Any water discharged into the pool water shall at least the same level of disinfection that is required for the type of pool that the device is in as listed in DPH Rule 511-3-5-.17.

(3) **Chemical Feeders.** The installation and use of chemical feeders shall conform to the following standards:

(a) Chemical feeders must be installed downstream from the filter and heater.

(b) If the chemical feeder is equipped with its own pump, it shall be installed so it introduces the gas or solution downstream from the heater and, if possible, at a position lower than the heater outlet fitting.

(c) Chemical feed pumps and controllers shall be wired so they cannot operate unless the filter pump is running. If the chlorinator has an independent timer, the filter and chemical feed pump timers shall be interlocked.

(d) All chlorine dosing and generating equipment including erosion feeders, or in line electrolytic and brine/batch generators, shall be designed with the capacity to provide an adequate dose of disinfectant based on the class, use, load, and setting. The system shall be designed with a capacity to provide the following:

1. Outdoor pools design capacity shall be four pounds of free available chlorine/day/10,000 gallons of pool water;

2. Indoor pools design capacity shall be two and one-half pounds free available chlorine/day/10,000 gallons of pool water.

(e) The rates above are minimums and in all cases the professional engineer or manufacturer shall validate the feed and production equipment specified. Stabilized levels must be able the meet the chapter.

(f) A physical barrier shall be installed between chemical feed pumps supplying acid or liquid hypochlorite solution and other pool components to shield staff and equipment from chemical sprays which might result from leaking connections.

(g) Feeders shall be capable of supplying disinfectant and pH control chemicals, if applicable, to maintain the minimum required disinfection levels at all times in accordance with the chapter.

(h) The injection point of disinfection chemicals shall be located before any pH control chemical injection point with sufficient physical separation of the injection points to reduce the likelihood of mixing of these chemicals in the piping during periods of interruption of recirculation system flow.

(i) The professional engineer shall validate the feed and production equipment specified. Disinfectant levels must meet the requirements of the chapter.

(j) In-line generators shall be permitted on pools using the following requirements:

1. In-line generators shall use pool-grade salt dosed into the water to produce and introduce chlorine into the pool treatment loop through an electrolytic chamber.

2. Electrolytic generators shall have a total dissolved solid (TDS) or salt (NaCl) readout and a low salt indicator.

3. The feed rate shall be adjustable from zero to full range.

4. The generator unit shall be listed and labeled to NSF Standard 50 and UL 1081 for electrical/fire/shock safety by an ANSI-accredited certification organization.

5. The generator shall be interlocked and installed according to the manufacturer's instructions.

6. The saline content of the pool water shall be maintained in the required range.

7. Brine batch generators shall produce chlorine through an electrolytic cell and produces chlorine from brines composed of pool-grade salt.

8. In line generator equipment shall have an EPA facility registration number.

9. An in line generator maybe supplemented with other systems to meet the dosing requirements in subsection (3) (d) above.

(k) Feeders for pH adjustment shall comply with the following:

1. Chemicals for pH adjustment shall include but not be limited to muriatic (hydrochloric) acid, sodium bisulfate, carbon dioxide, sulfuric acid, sodium bicarbonate, and soda ash.

2. A pH adjustment feeders shall be adjustable from zero to full range.

3. Reservoirs shall be clearly marked and labeled with contents.

(l) Automated controllers shall be installed for monitoring and turning on or off chemical feeders used for pH and disinfectant control in facilities referenced in DPH Rule 511-3-5-.16(2)(a)2.

(m) Operation manuals or other instructions that give clear directions for cleaning and calibrating automated controller probes and sensors shall be provided for the automated controller.

(n) Where used, ultraviolet light (UV) systems shall be installed in the recirculation system after the filters;

1. A bypass pipe that is valved on both ends shall be installed to allow maintenance on the UV unit while the pool is in operation.

2. UV system operation shall be interlocked with the recirculation pump so that power to the UV system is interrupted when there is no water flow to the UV unit.

(4) **Gas Feed Systems.** Carbon dioxide and ozone are the only gas feed systems permitted at a new public pool. Where CO_2 cylinders are located indoors, a monitor and alarm shall be provided to alert patrons/operator of high CO_2 or low O_2 levels.

(5) **Elemental (Gaseous) Chlorine**. Chlorine in the gaseous form may not be used as a disinfectant in pools constructed after 31 December 2016. Facilities that currently use gas chlorine systems may continue to use them if they follow subsections (a)-(p) below.

(a) Users of gas chlorine must be trained on the proper procedures for handling chlorine and the appropriate emergency procedures.

(b) Gas chlorination equipment shall be located so that equipment failure or malfunction will have minimal effect on evacuation of pool patrons in an emergency.

(c) Gas chlorine feeders (chlorinators) shall be activated by a booster pump using recirculated water supplies via the recirculation system. The booster pump shall be interlocked to the filter pump to prevent feeding of chlorine when the recirculation pump is not running.

(d) The chlorinator, cylinders of chlorine, and associated equipment shall be housed in a reasonably gas-tight and corrosion-resisting housing having a floor area adequate for the purpose. Cylinders shall always be stored in an upright position and properly secured so they cannot tip over if bumped.

(e) All enclosures shall be located at or above ground level. The enclosure shall be provided with a motor-driven exhaust fan capable of producing at least one air change per minute. This fan must be located at the lower part of the enclosure and there must be louvers of good design near the top of the enclosure for admitting fresh air. A warning sign stating "Chlorine Gas" shall be posted on doors. Doors to the chlorine room shall open away from the pool and be equipped with a viewing

window located so that the chlorinator and the inside of the enclosure can be clearly seen prior to entering.

(f) Electrical switches for the control of artificial lighting and ventilation systems shall be on the outside of the enclosure adjacent to the door.

(g) Facilities shall include a scale suitable for weighing the cylinders.

(h) Connections from the cylinders to the system depend on the type of chlorinator to be used and shall comply with the chlorinator manufacturer's recommendation.

(i) An automatic chlorine leak detector and alarm shall be installed in the chlorinator room.

(j) Respirators approved by the National Institute for Occupational Safety and Health (NIOSH) shall be provided for protection against chlorine. Occupational Safety and Health Administration (OSHA) regulations require training and maintenance programs for respirators.

(k) Containers may be stored indoors or outdoors. Full and empty cylinders shall be segregated and appropriately tagged. Storage conditions shall:

1. minimize external corrosion;
2. be clean and free of trash;
3. be located away from an elevator or ventilation system; and
4. be located away from elevated temperatures or heat sources.

(l) A specific person shall be made responsible for chlorination operations and shall be trained in the performance of routine operations including emergency procedures and leak control procedures, and maintain current documentation of their training in proper respirator use.

(m) Chlorine cylinders must be handled with care. Valve protection caps and valve outlet caps shall be in place at all times except when the cylinder is connected for use. Cylinders must not be dropped and shall be protected from falling objects. Cylinders shall be used on a first-in, first-out basis. New, approved washers shall be used each time a cylinder is connected.

(n) A safety wall chart shall be posted in or near the chlorine enclosure and a second chart shall be posted in the pool office near the telephone. The telephone number of the chlorine supplier shall be shown on this chart.

(o) Pool personnel shall be informed about leak control procedures.

(p) As soon as a container is empty, the valve shall be closed and the lines disconnected. The outlet cap shall be applied promptly and the valve protection hood attached. The open end of the disconnected line shall be plugged or capped promptly to keep atmospheric moisture out of the system.

(6) **Training.** Personnel responsible for the operation of the disinfection agent equipment shall be properly trained in the operation of that equipment and the procedure for performing and interpreting the necessary chemical field tests and the appropriate emergency procedures.

(7) **Test Kits.** Every pool shall be supplied with an accurate and reliable water quality testing device capable of measuring any agent that is introduced into the water of the pool.

(a) Digital water quality testing devices shall be listed and labeled to NSF 50 or approved by the health authority.

(b) All test kits should include methods for the determination of pH, free available chlorine (FAC), total available chlorine (TAC) if chlorine is used, bromine or other chemical disinfectant residuals, cyanuric acid (if used), total alkalinity, calcium hardness, and copper and silver (if a copper or copper/silver ionization unit has been installed).

(c) The local health authority shall be given, upon request, a field testing kit for any agents introduced into the water supply. If a field testing kit is not available, the agent cannot be introduced until standards for testing have been established by, and written approval has been obtained from, the health authority.

(d) The Orthotolidine test (OTO) is unacceptable since it cannot distinguish FAC and TAC.

(e) The test kit shall be stored in accordance with manufacturer's instructions. Chemical agents shall be maintained at proper manufacturer specified temperatures.

(f) A test kit that requires calibration shall be calibrated in accordance with the manufacturer's instructions.

Cite as Ga. Comp. R. & Regs. R. 511-3-5-.16
Authority: O.C.G.A. §§ 31-2A-6, 31-12-8, 31-45-10.
History. Original Rule entitled "Disinfectant Equipment and Chemical Feeders" adopted. F. Oct. 15, 2013; eff. Nov. 4, 2013.
Repealed: New Rule of same title adopted. F. Jan. 11, 2017; eff. Jan. 31, 2017.

Rule 511-3-5-.17. Chemical Operational Parameters.

The chemical operational parameters in swimming pool or spa water shall not exceed the maximum level or be lower than the minimum level given in the following parameters. Where no minimum or maximum is given, additional information is within this Chapter to assist the pool operator.

Minimum	Ideal	Maximum	Comments	
(1) Disinfectant Levels (a) Free chlorine, ppm in pools not using cyanuric acid or a stabilized chlorine compound use (b),1.-5.				In a pool, hot weather/heavy use may require operation at or near maximum levels. Regular superchlorination is recommended (see Remedial Practices below).
(b) All public pools except as listed below:	1.0	1.0-3.0	10.0	
1. Spas	3.0	3.0-5.0	10.0	
2. Activity/interactive/ Wading Pools	2.0	2.0-5.0	10.0	
3. Interactive Water Play Pool(Spray Pad)	2.0	2.0-5.0	10.0	
4. Wading Pools	2.0	2.0-5.0	10.0	
5. Water Attraction Pump Reservoirs	2.0	2.0-5.0	10.0	
(c) Free Chlorine level in pools using cyanuric acid or a stabilized chlorine product	2.0	2.0-5.0	10.0	
Combined chlorine, ppm	None	None	0.4	High combined chlorine results in chloramine formation and reduced chemical efficacy. Take remedial action to establish break point chlorination (See Remedial Practices below). Other signs of combined chlorine: -Sharp chlorine odor -Eye

				irritation -Algae growth
Bromine, ppm	Pool 3.0 Spa 4.0	Pool 3.0-5.0 Spa 4.0-6.0	Pool 8.0 Spa 8.0	
(2) Chemical Values				
pH	7.2	7.4-7.6	7.8	**If pH is:** Too High: - Low chlorine efficiency - Scale formation Cloudy Water Too Low: - Rapid dissipation of disinfectant - Eye discomfort - Plaster and concrete etching - Corrosion of metals and vinyl liner damage
Alkalinity (buffering), ppm as $CaC0_3$	60 ppm	80-100 for halogen compounds with a high pH 100-120 for halogen compounds with a low pH	180	**If total alkalinity:** Too Low: - pH bounce - corrosion tendency Too High: - Cloudy water

				- Increased scaling potential - pH tends to be too high
Total dissolved solids (TDS), ppm	These values are offered as guidelines rather than absolute values to indicate concern for accumulation of impurities in the course of operation. Excessive high TDS may lead to hazy water or corrosion of fixtures, and can be reduced by partial draining with addition of fresh water. High initial TDS may indicate poor water quality due to corrosive mineral salts, humus or organic matter. Consult local water authority. Increasing TDS indicates build-up of impurities to be controlled by partial drain/refill with fresh water.			
Calcium hardness, ppm, as $CaCo_3$	150	200-400 to balance water	1000	Operations of pools, spas and hot tubs at maximum hardness will depend on

				alkalinity (buffering) requirements of the disinfectant used. Maximum alkalinity and lower pH must be used with maximum hardness (over 500 ppm)
Heavy metals, ppm	None	None	If heavy metals, such as copper, iron, manganese, silver are present: -Staining may occur -Water may discolor -Chlorine dissipates rapidly -Filter may plug -May indicate pH too low or corrosion.	
(3) Biological Values				
Algae	None	None	None	If algae are observed: -Shock treat pool (See Remedial Practices, Shock treatment) -Supplement with brushing and vacuuming.

				-Use approved algaecide according to label directions (See Remedial Practices below)
Bacteria	None	Recognized Water quality Standard	If bacteria count exceeds maximum allowed: - Superchlorinate and follow proper maintenance procedures -Maintain proper disinfectant residual.	
(4) Stabilizer (if used)				
Cyanuric acid, ppm	-	30-50	90	**If stabilizer is:** Too High: - May reduce chlorine efficacy Too Low: - Chlorine Residual rapidly destroyed by sunlight Note: Stabilizer is not needed in indoor or brominated pools and spas.
(5) Remedial Practices				
Break point chlorination dosage in ppm.	When combined chlorine is over 0.4 ppm, superchlorinate			

Superchlorination	by adding ten times the combined chlorine in ppm and subtract the current disinfectant level. (e.g. combined chlorine is 0.5 ppm, superchlorinate by adding 4 ppm. (5 ppm -1 ppm current chlorine level = 4 ppm) Applied at the end of daily usage, hold this level for 1-4 hours to clarify the water, remove ammonia (combined chlorine), and to kill any algae present. Can also be applied when no bathers are present and as required to maintain clear water and the required halogen residual.			
Superchlorination frequency	Pool- monthly	Pool- Every other week Spa- Daily	Pool- Weekly when the temperature is over 85 °F	Note: Some high use pools may need superchlorination three times a week or more as a preventative measure or when combined chlorine is over 0.4

Shock treatment, dosage in ppm	10.0	--------	---------	Nonchlorine oxidizers are not considered biocidal, but may reduce organic contaminants.
Clarifying/Flocculating frequency	------	When needed	---------	Use all clarifiers following manufacturer's directions.
Algaecides	Follow manufacturer's directions. Use E.P.A. registered products.			
Water replacement	Water in spas that have high bather use may require partial or complete replacement of water periodically to dilute dissolved solids, to maintain water clarity and to do necessary routine maintenance.			
Foam	None	None	None	Foam may harbor persistent microorganisms. If foaming is not adequately controlled, consider daily shock treatment, water replacement or an appropriate antifoam agent. Follow manufacturer's directions.

(6) Temperature°F	--	78 -82 °F or Bather preference	104 °F	**If temperature is:** Too High: - Health hazard - Bather discomfort - Excessive fuel requirement - Increased evaporation - Increased scaling potential - Increased use of disinfectants - Increase potential for corrosion Too Low: - Bather discomfort - Increase chance of hyperthermia
(7) Water Clarity				
Water turbidity	Must be able to see main drain covers or marker tile on the bottom of the deepest portion of the pool.	--	--	**If water is turbid:** - Disinfectant level may be low - Filtration system may be inoperative - Improper chemical balance - Bottom should be clearly visible at the

				deepest part of the pool or spa. - Consult remedial practices
(8) Oxidizers				
Ozone, low output generators Contact concentration mg/L when ozone is injected and not removed prior to entry into pool. Above pool and spa levels	-- 0	-- 0	0.1 0.05	Serves as oxidizer of water contaminants. Indoor installations should have adequate ventilation.
(9) Oxidizer Reduction Potential				
ORP	750 MV	--	--	When chlorine or bromine is used as the primary disinfectant, ORP can be used as a supplemental measurement of proper disinfectant activity. The use of ORP testing does not eliminate or supersede the need for testing the disinfectant level with standard test kits and ORP reading may be affected by a number of factors including (1) pH, (2) probe film and (3) cyanuric acid. Follow manufacturer's recommendations.

Cite as Ga. Comp. R. & Regs. R. 511-3-5-.17
Authority: O.C.G.A. §§ 31-2A-6, 31-12-8, 31-45-10.
History. Original Rule entitled "Chemical Operational Parameters" adopted. F. Oct. 15, 2013; eff. Nov. 4, 2013.
Repealed: New Rule of same title adopted. F. Jan. 11, 2017; eff. Jan. 31, 2017.

Rule 511-3-5-.18. Specific Safety Features and Markers.

(1) **Handholds.** A public pool shall have a suitable handhold around its perimeter in areas where the depth exceeds three feet six inches. Handholds shall be provided no more than four feet apart and shall consist of any one or a combination of the items listed below:

(a) Coping, ledge or deck along the immediate top edge of the pool which provides a slip-resisting surface of at least four inches minimum horizontal width and located at or not more than twelve inches above the waterline; or

(b) Ladders, stairs or seat ledges; or

(c) A railing placed at or not more than twelve inches above the waterline.

(2) **Rope and Float Line.** A rope and float line shall be provided within one foot of and on the shallow side of the break in grade between the shallow and deep portions of the swimming pool, with its position marked with visible floats at intervals of seven feet or less.

(a) The rope and float line shall be securely fastened to wall anchors of corrosion-resisting materials and of the type which shall be recessed or have no projection that will constitute a hazard when the line is removed.

(b) The line shall be of sufficient size and strength to offer a good handhold and support loads normally imposed by users.

(c) The operator may remove the float line when the pool is used for lap swimming or swim meets. The line must be reattached immediately after completion of the event.

(3) **Depth Markers for Swimming Pools**. Depth of water in feet and inches shall be plainly and conspicuously marked at or above the waterline on the vertical pool wall and on the top of the coping or edge of the deck or walk next to the pool. The word or abbreviation for "feet" and "inches" must be specified. Where displayed in meters in addition to feet and inches, the word meter shall be spelled out.

(a) Depth markers on the vertical pool wall shall be positioned to be read from the water side. The marker shall be placed to allow as much of the number to be visible above the waterline as possible.

(b) Depth markers on the deck shall be within eighteen inches of the water edge and positioned to be read while standing on the deck facing the water.

(c) Depth markers shall be slip-resistant.

(d) Depth markers shall be installed at the maximum and minimum water depths and at all points of slope change.

(e) Depth markers shall be installed at intermediate increments of water depth of two feet or less, and shall be spaced at intervals of twenty-five feet or less.

(f) Depth markers shall be arranged uniformly on both sides and both ends of the pool.

(g) Depth markers on irregularly shaped pools shall designate depths at all major deviations in shape.

(h) Depth markers number and letters shall be tile and four inches minimum in height. Numbers shall be of contrasting color to the background on which they are applied.

(i) Depth markers shall indicate the actual pool depth within plus or minus three inches, at normal operating level when measured three feet from the pool wall or at the tangent point where the cove radius meets the floor, whichever is deeper.

(j) Interactive water play pools shall not be required to have depth markings or "No Diving" signage.

(4) **Depth Markers for Spas.** Public spas shall have permanent depth markers with numbers and letters a minimum of four inches high plainly and conspicuously visible from all obvious points of entry and in conformance with subsections (a) thru (f) below:

(a) There shall be a minimum of two depth markers per spa, regardless of spa size or shape.

(b) Depth markers shall be spaced no more than twenty-five feet apart and shall be uniformly located around the perimeter of the spa.

(c) Depth markers shall be positioned on the deck within eighteen inches of the water line.

(d) Depth markers shall be positioned to be read while standing on the deck facing the water.

(e) Depth markers in or on the deck surfaces shall be slip-resisting.

(5) **Clock.** All public facilities shall have a functioning clock which is visible to spa users.

(6) **Water Temperature.** The maximum temperature in a spa shall not exceed 104°F (40°C).

(a) The spa operator shall be provided with an accurate thermometer (±1°F tolerance) and shall periodically check to ensure that the maximum temperature does not exceed 104°F.

(b) A means to determine the spa temperature with a ±1°F tolerance shall be provided to the user.

(7) **Water Agitation**. The agitation system on spas constructed after 31 December 2016 shall be connected to a minute timer that does not exceed fifteen minutes and shall be located out of reach of a bather in the spa.

(8) **Emergency shutoff switch.** A clearly labeled emergency shutoff switch shall be provided for all pools and spas constructed or remodeled after the adoption of this chapter. The emergency shutoff or control switch shall stop the motors that provide power to the circulation system and hydrotherapy or agitation system pump. The emergency shutoff switch installation shall be installed in accordance with the applicable electrical code.

(9) **Lifeguards.** All owners, managers, or lifeguards, if provided, shall be responsible for the supervision and safety of the pool, spa, or recreational water park. If lifeguards and safety assistants are provided, then they must hold current, nationally recognized certifications in lifeguarding and a designated title commensurate to the assigned duties. Adult/child/infant CPR and First Aid certifications also must be current. The certificates, or photocopies thereof, shall be maintained at the facility and be available to the local health authority for inspection.

(10) **Lifesaving Equipment.** All public swimming pools shall have lifesaving equipment conspicuously and conveniently on hand at all times. Lifesaving equipment for special purpose pools may be exempted from this requirement or the requirements will be provided as deemed necessary by Health Authority. The following will be provided:

(a) A light, strong pole not less than twelve feet long including body hook.

(b) A minimum one-fourth inch diameter throwing rope one and one-half times the maximum width of the pool or fifty feet in length, whichever is less, to which has been firmly attached a ring buoy with an outside diameter of approximately fifteen inches or a similar flotation device which is U.S. Coast Guard approved.

(c) An operable, hard-wired, conventional telephone line or continuous powered source, weatherproof emergency phone shall be permanently installed in a conspicuous location within the pool enclosure and must be readily available to bathers at all times. The emergency phone shall be capable of connecting to 911 and electronically transferring an automatic number identification and automatic locator identification of the pool emergency phone to the public safety answering

point, if available. A 911 sign or the names and phone numbers of the nearest available police, fire, ambulance service or rescue unit shall be posted nearby.

(11) **Barriers.** All outdoor swimming pools and spas shall be enclosed by a barrier to prevent entry to the pool area when the pool is closed.

(a) The top of the barrier shall be at least forty eight inches above grade measured on the side of the barrier which faces away from the swimming pool.

1. The maximum vertical clearance between a solid surface and the bottom of the barrier shall be four inches measured on the side of the barrier which faces away from the swimming pool.

2. For non-solid surfaces, the vertical clearance between the bottom of the barrier and the grade shall not exceed two inches for a barrier constructed after adoption of the chapter.

3. Where the top of the pool structure is above grade, the barrier may be at ground level, such as the pool structure.

4. Where the barrier is mounted on top of the pool structure, the maximum vertical clearance between the top of the pool structure and the bottom of the barrier shall be four inches.

(b) Openings in the barrier shall not allow passage of a four inch diameter sphere.

(c) Solid barriers which do not have openings such as a masonry or stone wall, shall not contain indentations or protrusions except for normal construction tolerances and tooled masonry joints.

(d) Where the barrier is composed of horizontal and vertical members and the distance between the tops of the horizontal members is less than forty-five inches, the horizontal members shall be located on the swimming pool side of the fence. Spacing between vertical members shall not exceed one and three-fourth inches in width. Where there are decorative cutouts within vertical members, spacing within the cutouts shall not exceed one and three-fourth inches in width.

(e) Where the barrier is composed of horizontal and vertical members and the distance between the tops of the horizontal members is forty-five inches or more, spacing between vertical members shall not exceed four inches. Where there are decorative cutouts within vertical members, spacing within the cutouts shall not exceed one and three-fourth inches in width.

(f) Maximum size for chain link fences shall be one and three-fourth inches unless the fence is provided with slats fastened at the top or the bottom which reduce the openings to no more than one and three-fourth inches.

(g) Where the barrier is composed of diagonal members, such as a lattice fence, the maximum opening formed by the diagonal members shall be no more than one and three-fourth inches.

(h) Access gates shall also comply with the requirements of this Rule and shall be equipped to accommodate a locking device. Barrier gates shall open away from the pool in facilities constructed after adoption of this chapter. Pedestrian access gates shall be self-closing and have a self-latching device. Gates other than pedestrian access gates shall have a self-latching device. Where the release mechanism of the self-latching device is located less than fifty-four inches from the bottom of the gate,

1. The release mechanism shall be located on the pool side of the gate at least three inches below the top of the gate and

2. Any openings in the gate or barrier located within eighteen inches of the release mechanism shall be less than one-half inch.

3. Mechanisms controlled by an access card reader, key entry device or keypad shall be located on the outside of the access gate.

(i) There shall not be direct access from any dwelling into the pool enclosure. For indoor pools, other means of protection, such as self-closing doors with self-latching devices, keypads, card readers or key entry devices which are approved by the appropriate administrative authority, shall be accepted so long as the degree of protection afforded is not less than the protection of an outdoor facility.

(j) Barriers shall be located so as to prohibit permanent structures, equipment or similar objects from being used to climb the barriers. There shall be a clear zone of not less than thirty-six inches around the exterior of the barrier.

(k) A spa with a safety cover that complies with ASTM F1346,"Performance Specification for Safety Covers and Labeling Requirements for All Covers for Swimming Pools, Spas and Hot Tubs" shall be exempt from the provisions of this section. Swimming pools with safety covers shall not be exempt from the provisions of this rule.

(l) Windows on a building that form part of a barrier around a pool shall have a maximum opening width not to exceed four inches. If designed to be opened, windows shall also be provided with a non-removable screen.

(m) For a passage through a wall separating the indoor portion of a pool from an outdoor portion of the same pool, the overhead clearance of the passage to the pool floor shall be at least six feet eight inches to any solid structure overhead.

(12) **Warning Signs for Swimming Pools.** Signs shall be provided as follows:

(a) The words "No Diving" and the universal international symbol for "NO DIVING" shall be permanently visible at the edge of the deck for water five feet in depth or less, placed only on the deck beside the depth markers, and shall conform to that outlined for depth markers in subsections (3)(a) thru (h) above.

(b) Where no lifeguard is on duty, a sign or signs shall be placed in clear view at or near the entrance to the pool and shall state in clearly legible letters at least four inches high

"WARNING - NO LIFE GUARD ON DUTY and RISK OF DROWNING - SUPERVISE CHILDREN CLOSELY".

(c) The same sign in subsection (b) above or an additional sign will state under the heading "Pool Risks" the following items in clearly legible letters at least one inch high:

1. Shower before entering the water.
2. Children shall not use pool without an adult in attendance.
3. Adults should not swim alone.
4. All children three years old and younger and any child not potty-trained must wear snug fitting plastic pants or a water resistant swim diaper.
5. Do not swim if the suction outlets are missing, broken, or not clearly visible from the deck.
6. No glass articles allowed in or around pool.
7. Do not swallow the pool water.
8. Do not dive unless diving area is clear of other bathers.
9. Do not swim if you had diarrhea within the past two weeks.
10. No animals are allowed in the pool or pool enclosure, except service animals are allowed on the deck.

(13) **Warning Signs for Spas.** Signs shall be provided as follows:

(a) Signage which states safety, emergency and operational aspects of the spa, shall be prominently located near the spa.

(b) Warning signs for spas shall be in clear view of the spa and prominently displayed. Signs shall state the spa's address, the location of the nearest telephone with references that emergency telephone numbers are posted at the location.

These emergency telephone numbers should include the name and phone number of the nearest available police, fire or ambulance service, and "911" if available. Signs shall include, but not be limited to the following messages:

1. Risk of Fetus Damage. Hot water exposure limitations vary from person to person. Pregnant women and small children should not use spa without medical approval.

2. Risk of Drowning. Other persons suffering from heart disease, diabetes, high or low blood pressure, and other health problems should not enter the spa without medical approval.

3. Risk of Drowning. Do not use the spa while under the influence of alcohol, narcotics, or drugs that cause sleepiness and drowsiness or raise/lower blood pressure.

4. Risk of Drowning. Use caution when bathing alone. Overexposure to hot water may cause nausea, dizziness, and fainting. Lower water temperatures are recommended for young children and for extended use (more than10-15 minutes).

5. Risk of Drowning. Do not use or operate spa if the suction fitting is missing, broken, or loose.

6. Risk of Child Drowning. Unsupervised use by children is prohibited. Children under five shall not use the spa.

7. Risk of Injury. Check spa temperature before entering. The spa temperature should not exceed 104°F.

8. Risk of Injury. Enter and exit slowly.

9. Risk of Injury. Keep all glass and breakable objects out of the spa area.

10. Risk of Shock. Never place electrical appliances (telephone, radio, or televisions) within five feet of the spa.

(c) A sign shall be posted stating the hours of operation in clear view near the entrance and shall state the theoretical peak occupancy.

(14) In all swimming pools built prior to December 31, 2016 which have floor slopes greater than that allowed in this chapter or which have other construction variances to this chapter, the health authority may require a warning sign stating the possible hazard to be posted in public view.

(15) **Obstructions and Entrapment Avoidance.** There shall be no obstructions that might injure or entrap a user. Types of entrapment include, but are not limited to, wedge or pinch-type openings and rigid cantilevered protrusions.

(16) At least one drinking fountain shall be provided and available to users at the pool site.

(17) A minimum of one rinse shower shall be provided on the pool deck of all public pools and spas. Water used for rinse showers may be at ambient temperature.

(18) Class C multi-family residential housing pools are exempt from the requirements of (17) and (18) of the rule, if the facility is only open to residents and their guests.

Cite as Ga. Comp. R. & Regs. R. 511-3-5-.18
Authority: O.C.G.A. §§ 31-2A-6, 31-12-8, 31-45-10.
History. Original Rule entitled "Specific Safety Features" adopted. F. Oct. 15, 2013; eff. Nov. 4, 2013.
Repealed: New Rule entitled "Specific Safety Features and Markers" adopted. F. Jan. 11, 2017; eff. Jan. 31, 2017.

Rule 511-3-5-.19. Dressing Facilities and Sanitary Facilities.

(1) **Dressing Facilities.** Adequate dressing facilities for pools, spas and recreational water parks shall be provided adjacent to the pool unless adequate dressing facilities are provided elsewhere on the general premises in close proximity to the pool. (a) Handicapped accessible dressing and sanitary facilities shall meet all state and local requirements, and may be included as part of the required total number of water closets, shower heads, and lavatories. Dressing rooms may be combined with sanitary facilities, so long as all other requirements of this Rule are met.

(b) Dressing facilities, when provided, shall be have separations for each sex with no interconnection. The rooms shall be well-lighted, drained, ventilated, and of good construction with impervious materials. They shall be developed and planned so that good sanitation can be maintained throughout the building at all times.

(c) Partitions between portions of the dressing room area, screen partitions, shower, toilet and dressing room booths shall be of durable material not subject to damage by water and shall be designed so that a waterway is provided between partitions and floor to permit thorough cleaning of the walls and floor areas with hoses and brooms.

(d) There shall be at least one shower for each sex for facilities less than 4000 square feet of water surface area. One additional shower head for each sex shall be added for each additional 4000 square feet of water surface area or fraction thereof. These showers, when provided, may be used in place of the deck showers. However, the use of deck showers may not be substituted for dressing facility showers.

(e) Hot and cold water under pressure shall be provided in dressing facility showers.

(f) Floors of the dressing facility shall be free of joints or openings and shall be continuous throughout the areas. Floors shall have a slip-resistant surface that shall be relatively smooth to insure thorough cleaning. Floor drains shall be provided and floors shall be sloped not less than one-fourth inch per foot toward the drains to insure positive drainage.

(g) An adequate number of three-fourths inch hose bibs shall be provided for flushing down the dressing facility interior.

(2) **Sanitary Facilities.** Lavatories and toilets shall be provided for all public pools and spas and shall be located no more than 300 feet from the entrance; provided, however, that and increased risk pool shall have sanitary facilities no more than 200 feet from the entrance.

(a) The minimum criteria for lavatories and toilets for public pools shall be based upon the theoretical peak occupancy as established. The occupancy is divided evenly, fifty percent female and fifty percent male for these determinations.

(b) All public pools shall provide one water closet, one lavatory and one urinal for the first fifty male users. One additional water closet, lavatory and urinal shall be provided for each additional one hundred fifty male users or fraction thereof.

(c) All public pools shall provide two water closets and two lavatories for the first fifty female users. One additional water closet and lavatory shall be provided for each additional one hundred female users or fraction thereof.

(d) All spas shall provide at least one water closet and lavatory for each sex.

(e) Soap dispensers for providing either liquid or powdered soap shall be provided at each lavatory. The dispenser shall be of all metal or plastic. No glass shall be permitted in these units.

(f) At least one paper towel dispenser or hand blow dryer shall be provided for every three lavatories.

(g) An unbreakable mirror may be provided over each lavatory.

(h) Toilet paper holders shall be provided at each water closet.

(i) Soap, paper towels, and toilet tissue shall be provided in all dispensers.

(j) Fixtures shall be installed in accordance with local plumbing codes and shall be properly protected against back-siphonage.

(k) Fixtures shall be designed so that they may be readily and frequently cleaned and disinfected without damage.

(l) At least one trash receptacle will be available in toilet areas.

(m) Facilities shall provide a minimum of one diaper changing station in the male and female bathroom or dressing area.

(n) Sanitary facility fixtures and dressing area fixtures and furniture shall be cleaned and sanitized with an EPA-approved product and as needed to provide a clean and sanitary environment.

(o) If a bodily fluid such as feces, vomit, or blood has contaminated a surface, facility staff shall limit access to the affected area until the following remediation procedures or department approved process has been completed;

1. Before disinfection, all visible contaminant shall be cleaned and removed with disposable cleaning products effective with regard to type of contaminant present, type of surface to be cleaned, and the location with the facility.

2. Contaminated surfaces shall be disinfected with one of the following:

   (i) A 5,000 mg/l bleach disinfection solution, such as a 1:10 dilution of fresh household bleach with water; or

   (ii) An equivalent disinfectant that has been approved by the U.S. EPA for bodily fluids disinfection.

3. The disinfectant shall be left on the affected area for a minimum of twenty minutes or as otherwise indicated on the disinfectant label directions.

Cite as Ga. Comp. R. & Regs. R. 511-3-5-.19
Authority: O.C.G.A. §§ 31-2A-6, 31-12-8, 31-45-10.
History. Original Rule entitled "Dressing Facilities" adopted. F. Oct. 15, 2013; eff. Nov. 4, 2013.
Repealed: New Rule entitled "Dressing Facilities and Sanitary Facilities" adopted. F. Jan. 11, 2017; eff. Jan. 31, 2017.

Rule 511-3-5-.20. Recreational Water Parks and Special Purpose Pools.

The rule provides specifications for the design and operation of special purpose pools, such as amusement rides and water slides, whether used in recreational water parks or aquatic facilities as a standalone attraction or in combination with other attractions or pools. The design of special purpose pools shall comply with the specifications in this Rule and other applicable rules in this Chapter. This Rule describes several types of special purpose pools, but it is not intended to be an exhaustive list of such pools.

(1) **Deviation from requirements.**

(a) A special purpose pool may deviate from the requirements of this Chapter if and to the extent:

1. A variance from this regulation is obtained from the Department to accommodate the design and use of the special purpose pool; or

2. The design and construction of the attraction meet sound engineering practice and present no health or safety hazard; and

3. The facility provides appropriate supervision onsite during hours of operation.

(b) If combined pool types are approved within a recreational water park or aquatic facility, each pool must comply with the applicable chapter provisions as if the pool functioned independently.

(c) The designing engineer and manufacturer, if applicable, must verify that the device or design meets the applicable American Society for Testing and Materials standard or Consumer Product Safety Commission regulation.

(2) **Interactive Water Play Pool.**

(a) The water supply for an interactive water play pool must, at all times, meet the requirements relating to water quality set forth in DPH Rule 511-3-5-.17.

(b) The interactive water play pool must be equipped, at its lowest point, with an unvalved drain of sufficient capacity and design to prevent the accumulation of water in the pool. Any direct suction outlets shall be prohibited.

(c) If an interactive water play pool is positioned near a deeper water swimming pool, then it must be located at the shallow end and must be separated from the deeper water by at least ten feet of deck, or by a barrier or fence meeting the requirements of this section. The design shall meet the following:

1. The minimum size of the tank shall be equal to the volume of two and one-half minutes of the combined flow of all feature pumps and the filter pump.

2. Adequate access shall be provided to the reservoir. Stairs or a ladder shall be provided as needed to ensure safe entry into the tank.

3. When an underground reservoir is utilized, an automatic skimmer system shall be provided. A variable height skimmer may be used or a custom surface skimmer device may be substituted if deemed appropriate by both the design engineer and the health authority.

4. The filter system shall be capable of filtering and treating the entire water volume of the reservoir tank within thirty minutes. The filter system shall draft from the tank and return filtered and treated water to the tank through equally spaced inlet fittings.

5. The water feature pump shall draft from the reservoir tank and an automatic water level controller shall be provided.

6. The flow rate through the feature nozzles of the water features shall be such as not to harm the patrons and shall not exceed twenty feet per second unless justified by the design engineer and by the fountain system manufacturer.

7. An overfill waste line with air gap shall be provided and a means of vacuuming and completely draining the tank shall be provided.

8. Depth markers are not required.

(d) Interactive water play pools floor slope shall be at least one foot in twelve feet vertical to horizontal or gentler slope.

(e) The density factor used to determine theoretical peak occupancy shall be eight square feet per bather and one person per fifteen square feet of deck area.

(f) A barrier shall be provided to separate an interactive water play, wading, and wading interactive pools from other bodies of water within the same facility. The barrier shall comply with this Chapter unless:

1. The pool is separated by a distance of at least ten feet from other bodies of water;

2. If the aquatic facility consists only of one or more increased risk pools, such as interactive water play pools, then the requirements for an enclosure between pools are not required; or

3. A variance has been approved by the Department.

(g) For zero-depth-entry into pools, the floor slope shall be at a one foot in twelve feet vertical to horizontal or gentler slope. Trench drains shall be used along zero depth entries at the waterline to facilitate surface skimming.

(3) **Water slides.**

(a) A water slide shall consist of one or more flumes, landing pools, or slide runouts, a pump reservoir, and facilities for the disinfection and chemical treatment of the water.

(b) The structural design of a water slide and the materials used in its construction must conform to generally-accepted structural engineering practices and must provide a sound, durable structure that will safely sustain all the dead loads, operational loads, water loads, rider loads, and environmental loads encountered.

(c) All components of a water slide that come into contact with bathers must be assembled, arranged, and finished so that their external surfaces and edges do not present an injury hazard to the skin of users under casual contact.

(d) The owner of a water slide and the state registered professional engineer who designs and certifies the slide construction are responsible for the safe design and construction of the entire facility.

(e) The design engineer shall comply with this chapter and must provide documentation certification that the water slide design conforms to the following standards or any successor standards;

1. ASTM F2376-13 Standard Practice for Classification, Design, Manufacture, Construction, and Operation of Water Slide Systems;

2. ASTM F2469-09 Standard Practice for Manufacturer, Construction, Operation, and Maintenance of Aquatic Play Equipment; and

3. Ga. Rules & Regs. Chapter 120-3-27 Amusement Rides.

(f) **Flumes.**

1. Each flume of a water slide must be water-tight. Its surfaces must be inert, nontoxic, smooth and easily cleaned.

2. Flume material shall be demonstrated as strong enough to support specified loads.

3. Flume components, maintained using the manufacturer's instructions, shall not deteriorate over time in such a way that a hazard will develop.

4. If a tube-type flume is used, it must be designed or ventilated to prevent a hazardous concentration of toxic disinfectant fumes under all circumstances of operation.

5. Open flumes shall be configured to contain the rider or vehicle under all reasonable operating conditions.

6. Open water slide flumes shall be kept clear of obstacles within the water slide clearance envelope. Flume risers sections may be added to block access to anything encroaching in the area.

7. Water slides shall have additional sidewall height provided by a flume riser section on the outside part of all horizontal curves to contain the rider.

8. Lateral centripetal forces shall be considered in curved sections of flumes. Predicted rider speeds should be used to calculate these forces.

9. The flume must be designed and constructed so as to prevent bathers from falling out of the flume in elevated sections where a bather might be able to stop contrary to intended use.

10. The construction, dimensions and methods of mechanical attachment of a flume must provide a smooth and continuous surface through the entire length of the flume. Seams and joints shall be properly designed to prevent misalignment.

11. The walls of any flume must be designed so that the continuous and combined action of hydrostatic, dynamic and static loads, as well as normal environmental deterioration do not damage the flume bed to the extent of creating a structural failure that presents a hazard of injury to users or that requires frequent patch repairs that may weaken the structural integrity of the flume.

(g) **Flume exit.** The exit of any flume must be designed to ensure that bathers enter the landing pool or slide runout at a safe speed and angle of entry. If a slide that has two or more flumes, and there is a point of intersection between the centerlines of any two flumes, then the distance between that point and the point of exit for each intersecting flume must not be less than twenty feet, or thirty feet if any users exit a flume at high speed, or as otherwise certified by the design engineer.

(h) **Exit into landing pool.** If users exit the flume of a water slide into a landing pool, then the following requirements apply:

1. Landing pools shall be designed to decelerate and stop riders and allow them to exit the water slide without encountering an obstruction.

2. The exit path for riders shall not cross with the landing zone of other slides. The designated pool exit shall be such as to force the riders to move forward and away from the paths of riders from other flumes.

3. The flume must be horizontal and perpendicular to the wall of the pool at the point of exit.

4. The flume must be designed with an exit system that provides for safe entry into the landing pool or slide runout. Present practices for safe entry shall

follow the manufacturer's recommendation and ASTM standard. Other methods are acceptable as long as safe exit velocities and proper body altitudes are assured under normal use by the designing engineer;

5. The flume at pool entry shall be straight for the last eight of the water slide entering the pool. The exit must be flush with the vertical wall of the pool at the point of exit and not more than two inches above, nor less than six inches below, the normal operating level of the pool, unless otherwise certified by the design engineer; and

6. The distance between:

   (i) The side wall for a body slide landing pool and that portion of the flume exit nearest the wall must be not less than five feet and for a tube slide landing pool not less than four and one-half feet at the points of measurement in the pool;

   (ii) The centerline of the flume and the centerline of any adjacent flume must arranged to minimize the opportunity for contact with other riders when exiting the flumes of adjacent slides simultaneously and not be less than six feet at the point of exit; unless otherwise certified by the design engineer.

   (iii) The point of exit and the side of the landing pool opposite the bathers as they exit must be of sufficient length to decelerate and stop riders and minimize the potential for contact with the landing pool wall or stationary objects like ladders or steps, must not be less than twenty if the flume ends above or below the normal operating water level of the pool, unless otherwise certified by the design engineer.

(i) **Landing Pools.**

1. When a landing pool is used at a water slide flume, it must be located at the end of the slide.

2. Except as otherwise provided in subsection (3)(e) above, or as certified by the design engineer, the water depth in a landing pool at the end of the flume must be minimum of three and one-half feet from the normal operating water level to the floor. This depth must be maintained for distance of not less than twenty feet from the point of exit from the flume or not less than thirty feet if the point of exit is even with the normal operating water level. The landing pool for a high speed slide will require additional length and water depth. The health authority may waive these requirements if a special exit system is

used or if the manufacturer or design engineer designates a safe exit configuration from the flume and safe entry into the landing pool.

3. Beyond the area of level floor required above, in the area of the pool opposite the point of exit from the flume or other falling-entry feature, the floor of the landing pool may have a constant slope or a slope upward of not more than l foot in 7 feet.

4. If steps are provided instead of exit ladders or recessed steps with handrails, a handrail meeting the requirements of this Chapter must be provided at the steps opposite the point of exit from each flume.

(j) **Decks**. A deck must be provided along the exit side of the landing pool and along one or more of the other sides of the pool. The pump and reservoir must be accessible from a deck not less than three feet wide.

(k) **Means of access**.

1. A concrete walkway, steps, stairway, or ramp must be provided for access between the landing pool and the top of the flume.

2. The walkway or other means of access must:

   (i) not retain standing water;

   (ii) conform to the structural requirements of the local building code;

   (iii) be at least four feet wide;

   (iv) be provided with handrails;

   (v) have a slip-resistant surface;

   (vi) be separated from the flume by a physical barrier that is located a safe distance from the flume so that it cannot be touched by users of the flume.

(l) **Slide runouts.**

1. Slide runouts, if used, must have an exit opening or step, unless one or both of the walls of the runout are not more than nineteen inches in height.

2. Slide runouts must be designed with adequate length and water depth and sloped so as to bring the user to a safe stop.

(m) **Pump reservoirs**.

1. Pump reservoirs used in water slides must have sufficient volume to contain not less than two minutes of combined flow from all water treatment and flume pumps, or must contain enough water to ensure that the landing pool will maintain a constant water depth.

2. The interior of pump reservoirs must be water-tight with a hard trowel or equivalent slip-resistant finish.

3. Pump reservoirs must be accessible only to authorized persons. Intakes to the slide pump must be designed to allow cleaning without danger of trapping the operator.

(n) **Control of water.**

1. A surge-free automatic water makeup system with a manual override must be installed to maintain the normal operating water level of the landing pool at all times. An approved backflow prevention device must be provided.

2. The velocity of water at the weir or inlet grate must not exceed one and one-half feet per second.

3. The suction outlet drain of the falling-entry pool must be clearly visible from the deck with the flume water turned off.

(o) **Waterslide Rules.** The operator of a water slide or other falling-entry feature shall post one or more warning signs at the entrance to the facility. A sign with the heading "Risk of Illness and Injury", must state that the following types of conduct are prohibited within the facility:

1. Running, standing, kneeling, rotating, tumbling, or stopping in any flume or tunnel.

2. Rough playing on the slide or feature.

3. Diving or flipping while exiting from a flume or feature.

4. Use of the slide while under the influence of alcohol or drugs.

5. Use of the flume or feature by more than one person at a time.

6. Failure to obey the instructions of the pool attendant or lifeguard.

7. Failure to keep hands inside the flume while using the slide.

8. Failure to leave the falling-entry pool promptly after exiting from the slide.

9. The possession of any glass, bottle or food in or near any pool.

10. Entry into an area of grass or other vegetation and returning to slide, feature or pool.

11. The possession of any loose objects.

12. The use of any clothing other than the swimwear on the slide or feature.

13. Wearing any bracelet, watch, or other jewelry.

(p) **Precautions for safety.**

1. An attendant must be on duty at all times while a water slide is open for use. The attendant shall serve as the safety director of the slide. In that capacity, the attendant shall control crowds, keep bathers moving through the pool or runout in an orderly fashion, and control any unsafe behavior in the lower flumes, in the pool or runout, or on the decks at the base of the slide.

2. An attendant must be on duty at all times while the water slide is open for use. The attendant shall control bathers near the entrance, regulate the departure of each bather down the slide, and control any unsafe behavior in the upper flumes.

3. Radio or other means of communication acceptable to the health authority must be provided between the flume entry attendant and the splash pool or slide runout lifeguard.

4. Each water slide must have a means to allow the flume entry attendant to monitor the slide exit.

(q) **Pool Slides.** All pool slides shall be designed, constructed, and installed to provide a safe environment for all bathers utilizing the slide in accordance with the applicable ASTM and CPSC standard.

1. Water depth at the slide exit shall be determined by the slide manufacturer.

2. The landing area in the pool shall be protected through the use of a float line, peninsula, or other similar design to prevent collision with other bathers.

3. Clear space shall be maintained to the pool edge and between other features per manufacturer requirements.

4. A barrier or netting shall be provided to prevent bather access underneath the pool slide where sufficient clearance is not provided. Openings in any

barrier or netting shall not allow for the passage of a four inch sphere and no opening can create a finger entrapment.

5. Pool slides must have an attendant during hours of operation to monitor activity and compliance with the posted manufacturer warnings.

(4) **Activity pools.** Amusement devices used in activity pools must be designed and maintained so that their surfaces are smooth, nontoxic and easily cleanable. The devices must not pose a safety or health hazard to users and must not interfere with circulation or disinfection of the water. The pool and equipment shall meet the following;

(a) Play and water activity equipment shall be installed in accordance with the manufacturer's instructions.

(b) A rope and float line shall be provided to identify a water depth of more than four and one half feet in a constant floor slope configuration.

(c) Floating devices not intended to be mobile shall be anchored in a manner to restrict movement to the range established by the manufacturer; and

(d) ASTM F2469-09 Standard Practice for Manufacturer, Construction, Operation, and Maintenance of Aquatic Play Equipment and Consumer Product Safety Commission standards shall be met.

(5) **Wave pools.**

(a) The generation of waves more than three feet in height in a wave pool, regardless of the depth of the pool, must not continue for more than fifteen minutes at a time.

(b) The main drain must be clearly visible from the deck with the wave generating equipment turned off.

(c) Bather access to the wave pool shall be allowed only at the shallow or beach end. The sides of the pool must be protected from unauthorized entry into the pool by the use of a fence or other comparable barrier.

(d) Wave pools must be provided with handholds at the static water level. These handholds must be self-draining and must be installed so that their outer edge is flush with the pool wall. The design of the handholds must ensure that body extremities will not become entangled during wave action.

(e) Life jackets must be provided free for use by bathers who request them.

(f) Each permanent station for pool attendants and lifeguards must be provided with a clearly labeled and readily accessible emergency shut-off switch for the control of

the wave action. A minimum of two emergency shut-off switches to disable the wave action shall be provided, one on each side of the wave pool.

(g) An audible warning system must be provided to alert bathers of the beginning of wave generation.

(h) Stepholes and handrails must be provided at one or more locations along the wall of the wave pool. The stepholes and handrails must extend down the wall so they will be accessible during wave generation at the lowest water level. The distance between the handrail and the wall must not exceed six inches.

(i) A rope and float line shall be installed to restrict bather access to the wave pool caisson wall. The location of the rope and float line shall be in accordance with the wave equipment manufacturer's instructions. The wall anchors shall be recessed and be made of corrosion-resistant material. A float line is not required to separate the first point of transition from shallow to deep.

(6) **Wading Interactive/Child amusement lagoons.** Devices used in child amusement lagoons must be designed and maintained so that their surfaces are smooth, nontoxic and easily cleanable.

(a) The devices must not pose a safety or health hazard to bathers and must not interfere with circulation or disinfection of the water.

(b) The devices shall comply with ASTM F2469-09 Standard Practice for Manufacturer, Construction, Operation, and Maintenance of Aquatic Play Equipment and Consumer Product Safety Commission Standards.

(7) **Leisure River, Continuous Water Channel - Watercourse rides.**

(a) Handrails, steps, stairs, and booster inlets for watercourse rides must not protrude into the watercourse.

(b) The watercourse must not be narrower than twelve feet and not deeper than three and one half feet.

(c) An approved method of exit must be provided at least every two hundred feet along the watercourse.

(d) A deck must be provided along at least one side of the water course.

(e) The design velocity of the water in a watercourse ride must not exceed two miles per hour.

(f) The design engineer of a continuous water course may deviate from the requirements in subsections (a) - (e) above if sound engineering and safety practices are met.

(g) All bridges spanning a watercourse shall have a minimum clearance of both seven feet from the bottom of the watercourse and four feet above the water surface to any structure overhead.

(8) **Sanitary and Dressing Facilities for Waterparks.** The design of the facility and the number of fixtures for the first 7500 square feet or fraction thereof of water available for bather access shall meet DPH Rule 511-3-5-.19. For every additional 7500 square feet or fraction thereof of water available for bather access at the facility, there shall be not less than one water closet for males, one urinal for males, one lavatory for males, one shower for males, two water closets for females, one lavatory for females and one shower for females.

(a) A rinse shower shall be on the deck or at entrance of each pool or attraction.

(b) Water used for rinse showers may be at ambient temperature.

Cite as Ga. Comp. R. & Regs. R. 511-3-5-.20
Authority: O.C.G.A. §§ 31-2A-6, 31-12-8, 31-45-10.
History. Original Rule entitled "Recreational Water Parks and Special Purpose Pools" adopted. F. Oct. 15, 2013; eff. Nov. 4, 2013.
Repealed: New Rule of same title adopted. F. Jan. 11, 2017; eff. Jan. 31, 2017.

Rule 511-3-5-.21. Food Service.

(1) Food Service facilities shall comply with provisions of Article 13 of O.C.G.A. Chapter 26-2 and DPH Rule 511-6-1.

(2) Bathers shall not be allowed to eat or drink while in or partially in the water.

(3) Food and beverages shall only be served on non-breakable containers. The pool must be drained and vacuumed if any broken glass enters the water.

(4) Covered trash containers shall be provided where food or beverages are available and allowed to be consumed.

Cite as Ga. Comp. R. & Regs. R. 511-3-5-.21
Authority: O.C.G.A. §§ 31-2A-6, 31-12-8, 31-45-10.
History. Original Rule entitled "Food Service" adopted. F. Oct. 15, 2013; eff. Nov. 4, 2013.
Repealed: New Rule of same title adopted. F. Jan. 11, 2017; eff. Jan. 31, 2017.

Rule 511-3-5-.22. Operation and Management.

(1) All swimming pools and spas covered by this Chapter shall be maintained under the supervision and direction of a properly trained operator who shall be responsible for the sanitation, safety, and proper maintenance of the pool and all related equipment, and for and daily recordkeeping.

(2) The trained operator shall have a current certificate showing completion of an approved operator training course. A copy or the original certificate or documentation shall be available onsite for inspection by the Health Authority.

(3) The trained operator may be an employee or a contract service provider.

(4) Training for the operator can be obtained by completion of a course approved by the Department.

(5) The trained operator must perform a minimum of two visits weekly and be able to provide assistance whenever needed.

(6) Written documentation of the operator's visits must be available at the pool facility. At a minimum, the written record must indicate the condition of the following items:

   (a) The circulation, filtration, and disinfection systems,

   (b) safety equipment on-site,

   (c) pool stairs and deck condition,

   (d) water chemistry test results and,

   (e) record what corrective actions, if necessary, were taken by the operator.

(7) Facilities without an on-site trained operator must appoint a responsible on-site person. This individual must be capable of testing the water chemistry as required by the chapter, and must be trained to perform the requirements in DPH Rule 511-3-5-.16.

(8) The responsible person must receive training on basic pool operations from the trained operator, or from a local health department course if available.

(9) **Water Testing Frequency.** The trained operator or responsible person shall collect water samples from the water in the pool for monitoring. An in-line sampling port may be used for water held in reservoirs. The water quality testing frequency shall be as follows:

   (a) For pools, free available chlorine or total bromine and pH shall be tested a minimum of two times daily during the hours of operation.

(b) Total alkalinity shall be tested weekly and calcium hardness shall be tested monthly.

(c) If stabilized chlorine is used as the primary disinfectant, the operator shall test cyanuric acid every two weeks. Otherwise, cyanuric acid shall be tested monthly. Cyanuric acid shall be tested twenty-four hours after addition to the water.

(d) For spas and hot water venues, free available chlorine, total bromine, pH and water temperature shall be tested prior to opening and recorded every four hours.

(e) In-line oxidation reduction potential readings (if applicable) shall be recorded at the same time the free available chlorine or total bromine and pH tests are performed.

(f) If in-line electrolytic chlorinators are used, salt levels shall be tested at least weekly or per manufacturer's instructions.

(10) **Water Testing Procedure.** The pool operator or responsible person shall acquire a water sample for testing the chemical parameters:

(a) The sample shall be obtained from at least eighteen inches below the surface of the water and from a location between the inlets.

(b) The sample shall be obtained from a section of the pool that has a water depth of between three to four feet when available.

(c) For each water test, sampling locations shall rotate around the shallower end of the pool. The pool operator shall include the deepest area of the pool in the water sampling rotation once per week.

(11) If the water test results are not in compliance with DPH Rule 511-3-5-.17, the operator shall close the pool, record findings, and make the necessary adjustments to the water chemistry to comply with the chapter. The chemicals used and amounts shall be recorded on the operator log.

(12) A safety self-inspection shall be conducted daily by the trained operator or responsible person and documented on a log sheet.

(13) **Fecal and Non-Fecal Contamination Response Plan.** All public swimming pools shall have a written contamination response plan for responding to incidents of formed-stool, diarrheal-stool, and vomitus contamination. Such incidents shall be recorded and managed by the trained operator or responsible person as follows:

(a) A log shall be maintained to record each occurrence of contamination in the water or on the adjacent deck area for formed or diarrheal fecal material, whole stomach discharge of vomitus, and blood.

(b) After an incident, the public swimming pool will be closed for the time required to achieve the correct contact concentration and time (CT) value (CT, mg-min/L) for the hazard, in accordance with the most recent recommendations published by the Centers for Disease Control and Prevention.

(14) Upon completion of any swimming pool or spa, the manager and his operators shall be given complete written and oral instructions by the builder as well as operational guidance of the pool, all equipment and the maintenance of the swimming pool water.

(15) The theoretical peak occupancy limit shall be observed by the management. A sign stating the occupancy shall be posted in a visible location near the entrance in four inch letters and numbers. The maximum number of bathers to be allowed in a pool enclosure at one time shall be based on DPH Rule 511-3-5-.05(12).

(16) Management shall establish an inclement weather policy for the safety of the bathers.

Cite as Ga. Comp. R. & Regs. R. 511-3-5-.22
Authority: O.C.G.A. §§ 31-2A-6, 31-12-8, 31-45-10.
History. Original Rule entitled "Operation and Management" adopted. F. Oct. 15, 2013; eff. Nov. 4, 2013.
Repealed: New Rule of same title adopted. F. Jan. 11, 2017; eff. Jan. 31, 2017.

Rule 511-3-5-.23. Compliance Procedures.

(1) A swimming pool, spa, or recreational water park shall not operate until a valid operating permit has been issued by the health authority after inspection.

(2) An operating permit shall not be issued until appropriate inspections show compliance with the requirements of this Chapter, with no violations noted on the inspection report.

(3) The health authority shall inspect the swimming pool, spa, or recreational water park for compliance as follows:

(a) Swimming pools, spas, or recreational water parks which open on or after April 1 and which close on or before October 31 shall be inspected at least once during the period of operation.

(b) All other swimming pools, spas, or recreational water parks shall be inspected at least twice each year. Additional inspections may be made as determined necessary by the health authority.

(c) The inspection, testing and monitoring frequency may be changed by the health authority based on the occurrence of injury and illness or inspection history.

(d) The operator shall receive a copy of the inspection and place it in a location protected from the weather and in public view as designated by the health authority.

(e) Representatives of the health authority, after proper identification, shall be permitted to enter any swimming pool or spa facility or the grounds of any recreational water park at any reasonable time for the purpose of making inspections to determine compliance with this Chapter.

(4) **Inspection Report Ratings and Imminent Hazards**. The inspection report used will be as adopted by the Georgia Department of Public Health.

(a) An unsatisfactory rating will be given when any of the following occurs:

1. When an imminent health hazard as described in subsection (5) below is found;

2. when any two or more violations are found; or

3. when any violation is repeated on a follow up inspection.

(b) A satisfactory rating will be given:

1. When no more than one non-imminent health hazard violation is found, and

2. when there are no repeat violations on a follow-up inspection.

(c) . A follow-up inspection shall be performed within thirty days from the date of an unsatisfactory rating.

(d) Violations which are not imminent health hazards shall be corrected within thirty days, or upon a timeframe in the plan of correction approved by the local health authority.

(e) An unsatisfactory rating may result in suspension or revocation of the operating permit.

(5) **Imminent Health Hazards**. Items that are considered imminent health hazards include the following:

(a) During operation, disinfectant levels are less than the minimum level specified in DPH Rule 511-3-5-.17. If the level of the disinfectant used is not specified in DPH Rule 511-3-5-.17, the disinfectant must be approved and kept at levels determined necessary by the health authority.

(b) During operation, the pH is less than the minimum or more than the maximum levels allowed in DPH Rule 511-3-5-.l7.

(c) The pump, automatic disinfectant equipment, or other equipment necessary for continuous filtration and disinfection of the swimming pool, spa, or recreational water park attraction is not working or is unable to maintain adequate turnover rate.

(d) The water turbidity is such that the suction outlet/main drain cover or a standard white marker tile on the bottom of the deepest portion of the pool cannot be seen.

(e) Broken glass or sharp objects in the water or on the deck area;

(f) Broken, unsecured, or missing main drain, or any submerged suction outlet cover/grate;

(g) Failure to provide and maintain a barrier to inhibit unauthorized access to the outdoor facility when required;

(h) Absence of required lifesaving equipment on the deck or an emergency phone;

(i) Number of bathers exceeds the posted peak occupancy;

(j) Use of an unapproved or contaminated water supply source for potable water use;

(k) A fecal matter contamination in the water; and

(l) Other hazards as determined by the health authority.

(6) Fecal incidents shall be recorded and reported to the local health authority at the time of the incident.

(7) The health authority may require the preparation of a water sampling and a water safety plan by an appropriate professional when operational conditions and bather health and safety warrant such action.

(8) **Voluntary Closure.** In lieu of suspension or revocation of a permit, a swimming pool, spa, or recreational water park attraction may be allowed to voluntarily close until such time as the violations resulting in an unsatisfactory rating are corrected. The health authority shall inspect the premises within two working days of notification that the hazard has been corrected by the operator.

(9) **Suspension or Revocation.** The health authority may deny permit applications, and may suspend or revoke permits, for failure to comply with the provisions of this Chapter. When an application for a permit is denied or the permit previously granted is to be suspended or revoked, the applicant or holder thereof shall be afforded notice and an opportunity for a hearing.

(a) The action of the health authority is effective upon service of a written notice thereof, and operation must cease immediately in the case of a suspension or revocation.

(b) The notice must state the basis for the action and advise the permit holder or applicant of the right to a hearing on request within 72 hours.

(c) If requested, the hearing will be conducted by an experienced supervisory level employee of the health authority not directly involved in the suspension.

(d) The rules of evidence will not apply, but both the health authority and the permit holder or applicant may present witnesses, documents, and argument.

(e) The hearing official will be authorized to rescind, affirm, or modify the action, and may impose conditions on any decision allowing the pool to operate.

(f) If a hearing is not requested, the owner may request an inspection to reinstate the permit after correcting all violations.

(g) **Notice of Hearing.** A notice of hearing is properly served when delivered in person, or by registered or certified mail, to the owner, operator, responsible person, or authorized agent of the swimming pool, spa, or recreational water park.

(h) If the permit holder or applicant is unsatisfied by the decision of the hearing officer, then it may pursue an appeal to the Department in accordance with Code Section 31-5-3.

Cite as Ga. Comp. R. & Regs. R. 511-3-5-.23
Authority: O.C.G.A. §§ 31-2A-6, 31-12-8, 31-45-10.
History. Original Rule entitled "Compliance Procedures" adopted. F. Oct. 15, 2013; eff. Nov. 4, 2013.
Repealed: New Rule of same title adopted. F. Jan. 11, 2017; eff. Jan. 31, 2017.

Rule 511-3-5-.24. Environmental Health Personnel.

(1) All Environmental Health personnel who are assigned responsibilities in public swimming pool plan review, permitting, inspecting, or other means of enforcing this Chapter, must complete a state approved exam demonstrating knowledge of the public swimming pool chapter.

(2) All in-service training must be approved by the local Environmental Health supervisor or lead personnel. Employee attendance records of approved training shall be maintained in the county of employment and shall be subject to Department monitoring.

Cite as Ga. Comp. R. & Regs. R. 511-3-5-.24
Authority: O.C.G.A. §§ 31-2A-6, 31-12-8, 31-45-10.

History. Original Rule entitled "Environmental Health Personnel" adopted. F. Jan. 11, 2017; eff. Jan. 31, 2017.

Subject 511-3-6. PORTABLE SANITATION CONTRACTORS.

Rule 511-3-6-.01. Applicability.

These Rules shall apply to all portable sanitation service providers except those being used in a facility or system under the jurisdiction of and regulated by the Department of Natural Resources under the Georgia Water Quality Control Act or the Georgia Comprehensive Solid Waste Management Act.

Cite as Ga. Comp. R. & Regs. R. 511-3-6-.01
Authority: O.C.G.A. Sections 31-2A-6, 31-12-8, 31-27-9, 12-8-1.
History. Original Rule entitled "Applicability" adopted. F. Oct. 16, 2013; eff. Nov. 5, 2013.

Rule 511-3-6-.02. Definitions.

(a) "Approval" or "approved" means acceptable or accepted by the Health Authority in accordance with applicable specifications stated herein or with additional criteria applied by the Authority.

(b) "Certified Portable Sanitation Contractor" means an individual engaged in furnishing, renting, or servicing portable units, and that has met the certification requirements of this Chapter and is in good standing with the Department.

(c) "Certified Portable Sanitation Company" means a person engaged in the business of furnishing, renting or servicing portable sanitation units, and that has met the requirements of this Chapter and is in good standing with the Department.

(d) "Construction Site" means a development area in which building construction, repair, or land improvement is taking place.

(e) "Department" or ""DPH" means the Georgia Department of Public Health.

(f) "Health Authority "means a county board of health organized pursuant to O.C.G.A. Sections 31-3-1*et seq*.

(g) "Holding Tank" means a water-tight container utilized temporarily to hold sewage from a portable sanitation unit.

(h) "Onsite Sewage Management System" means a sewage management system other than a public or community sewage treatment system, whether serving single or multiple buildings, mobile homes, recreational vehicles, residences or other facilities designed or used for human occupancy or congregation. It includes conventional septic tank systems

and privies, as well as alternative onsite sewage management systems approved by the local Health Authority.

(i) "Person" means any individual, partnership, corporation or association including bodies political and corporate.

(j) "Portable chemical toilet" means a self contained non-flush portable toilet facility containing a solution of water and chemical intended for the collection and temporary storage of human body wastes.

(k) "Portable hand washing fixture" means any portable fixture containing fresh water, soap and disposable towels used for cleaning an individual's hands.

(l) "Portable sanitation contractor" means an individual performing services related to installation, pumping, transportation, disposal, maintenance, removal, or safe management of portable sanitation units and portable hand washing fixtures.

(m) "Portable sanitation unit" means any portable structure or fixture used for the collection, temporary storage and chemical treatment of human body wastes that is not connected to an onsite sewage management system or public or community sewerage system. It includes portable chemical toilets and portable hand washing fixtures.

(n) "Portable sanitation waste" means sewage from portable sanitation units or other equipment designed for temporary collection and storage of waste containing human excreta or residuals of such, or other waste having similar characteristics, and the ingredients used as part of operation of the portable sanitation unit. It does not include liquid or solid material removed from a septic tank or similar treatment works that receives commercial wastewater, industrial wastewater or grease removed from a grease trap.

(o) "Prohibited discharge" means the discharge or spillage of sewage from a portable sanitation unit in violation of law and that constitutes a public health nuisance.

(p) "Public health nuisance" means any condition with the potential to cause or promote pathogens, infection, or disease in any individual or the public in general.

(q) "Sanitary" means free of conditions with the potential to cause or promote pathogens, infection, or disease in any individual or the public in general.

(r) "Sewage" means human excreta, all water-carried wastes, and liquid portable sanitation waste including grey water from portable showers and hand washing fixtures.

(s) "Special event" means any temporary activity attracting more than fifty persons and where individuals congregate to participate in or observe an activity in outdoor or portable enclosed or semi-enclosed structures for more than two consecutive hours.

(t) "Toilet" means a sanitary fixture meeting Health Authority and plumbing code requirements for receipt and conveyance of human body wastes to a public or community sewerage system or an onsite sewage management system.

Cite as Ga. Comp. R. & Regs. R. 511-3-6-.02
Authority: O.C.G.A. Sections 31-2A-6, 31-12-8, 31-27-9, 12-8-1.
History. Original Rule entitled "Definitions" adopted. F. Oct. 16, 2013; eff. Nov. 5, 2013.

Rule 511-3-6-.03. General Provisions.

(1) The Department shall regulate the use of temporary non-flush portable sanitation units, and shall regulate persons engaged in the business of furnishing, renting, or servicing portable chemical toilets, and portable hand washing facilities at locations where public sewage treatment systems or on-site sewage management systems are not available or lack sufficient quantities.

(2) No person shall engage in the removal or disposal of the contents of a portable sanitation unit without having obtained a "Waste Removal and Disposal Permit" from the Health Authority for the county in which the business is based. The permit must be renewed annually, and shall be valid in every county throughout the State.

(3) It is the responsibility of the certified portable sanitation contractor and certified portable sanitation company to maintain the portable sanitation unit in a safe and sanitary manner so as not to constitute a public health nuisance.

(4) The property owner and special event sponsor are responsible for all prohibited discharge and unapproved spillage of sewage associated with a portable sanitation unit. A portable restroom or portable hand wash fixture cannot be used or maintained in such a manner that will allow the seepage, dumping or discharge of sewage from such system to the ground surface, to a water course, drainage ditch, open trench, canal, storm drain or storm sewer, water well, abandoned well, lake, stream, river, estuary, groundwater or other body of water. The property owner and special event sponsor must notify the portable sanitation company if any unit becomes unsanitary, unsafe, or causes a prohibited discharge. The property owner, as the originator, is responsible for ensuring that the portable sanitation unit is only used for the disposal of human excreta. Commercial waste, grease, hazardous chemicals, and non human excreta shall not be discarded into portable sanitation units.

(5) Each special event sponsor and construction site owner utilizing a portable sanitation unit must and show proof of a service contract with a certified portable sanitation company.

(6) Portable sanitation unit must meet the requirements of this Chapter where sanitary facilities are needed on a temporary basis for construction sites and special events.

(7) Employees at all construction sites and the general public attending and participating in special events that are inadequately served by sewered toilet facilities should have easy access to portable sanitation units that are maintained in a clean, sanitary, and functional condition for the protection of human health, safety and welfare. Where a portable sanitation unit supplements or serves in lieu of sewered toilet facilities, the portable sanitation units shall meet the following guidelines:

(a) Must be furnished by a certified portable sanitation contractor or company holding a current "Waste Removal and Disposal Permit" issued by a Health Authority.

(b) The minimum number of portable sanitation units required during anticipated peak attendance at a construction site shall be determined in accordance with the most current Occupational Safety and Health Administration (OSHA) Regulations for Toilets at Construction Sites (Appendix Table 1), after taking into consideration any sewered seated or urinal toilets that may be present at the site of the construction site.

(c) The minimum number of portable sanitation units required during anticipated peak attendance at a special event shall be determined in accordance with Table 2, after taking into consideration any sewered seated or urinal toilets that may be present at the site of the special event.

(8) Portable sanitation units shall be located as close as practical to the highest concentration of participants, observers and employees of special events. However, the units should be placed as far from the food service area as possible. The safety of users shall be a primary consideration in the placement of the units. At special events, portable sanitation units shall be accessible at all times for maintenance by truck.

(9) No strong bases, acids or organic solvents shall be used in the operation of a portable sanitation unit. Chemicals used in the cleaning, operation or maintenance of portable sanitation units shall be in accordance with applicable federal, state and local provisions.

(10) The fresh water tank on the service vehicle must be filled with potable water only. When hand wash fixtures are serviced, they must be filled with water from the fresh water tank on the truck or directly from a potable water source. All fresh water tanks on the service vehicles and affixed to hand wash fixtures must be labeled with the international symbol for "Do Not Drink". Each hand washing fixture must be sufficiently supplied with soap and paper towels adequate for the duration between servicing.

Cite as Ga. Comp. R. & Regs. R. 511-3-6-.03
Authority: O.C.G.A. Sections 31-2A-6, 31-12-8, 31-27-9, 12-8-1.
History. Original Rule entitled "General Provisions" adopted. F. Oct. 16, 2013; eff. Nov. 5, 2013.

Rule 511-3-6-.04. Construction of Portable Sanitation Units.

(1) A portable sanitation unit shall be a portable self-contained sheltered unit equipped with a waste-receiving holding tank. The waste container shall be rigid, water-tight, made from impervious material, and capable of containing the waste in a sanitary manner.

(2) Portable sanitation units shall be constructed in the following prescribed manner:

(a) Each portable sanitation unit must have the name and phone number of the company clearly visible.

(b) Rooms or shelters housing the units shall be of solid construction, easy to clean, and provide privacy. The toilet room shall be ventilated to the outside and adequately lighted. All ventilation openings to the units, except vent pipes, shall be covered with a screen.

(c) Portable sanitation units shall have closing doors with internal latches provided to prevent inadvertent entry.

(3) Portable sanitation units having hand wash fixtures shall have an air gap between the water supply faucet and the flood level rim of the fixture sufficient to prevent backflow and cross contamination between the fresh water supply tank and the wastewater holding tank.

(4) Any defective or inadequate portable sanitation unit shall be repaired, replaced or withdrawn from service by locking or removal.

Cite as Ga. Comp. R. & Regs. R. 511-3-6-.04
Authority: O.C.G.A. Sections 31-2A-6, 31-12-8, 31-27-9, 12-8-1.
History. Original Rule entitled "Construction of Portable Sanitation Units" adopted. F. Oct. 16, 2013; eff. Nov. 5, 2013.

Rule 511-3-6-.05. Removal and Disposal of Waste from Portable Sanitation Units.

(1) Removal and disposal of waste from portable sanitation units shall be conducted only by a certified portable sanitation contractor in good standing with the Department, pursuant to a "Waste Removal and Disposal Permit."

(2) The application for a "Waste Removal and Disposal Permit" shall be submitted in writing, on forms provided by the Department, to the Health Authority for the county in which the business is based, at least ten days prior to engaging in such activities. The Health Authority shall approve or disapprove the application within twenty days after the receipt of a completed application. The application shall include the business name and address, name and address of the applicant, the manner by which such contents are to be removed, transported and given final disposal, and such other documentation as required by the Health Authority, including evidence that waste removed and transported will be

accepted at approved disposal sites. Prior to the issuance of a permit, the applicant shall provide evidence of satisfactory compliance with the provisions of these rules.

(3) The permit shall be valid for no more than twelve months, and shall be subject to suspension and revocation for failure to comply with the requirements of these regulations. Permits shall expire upon change in company ownership or business location.

(4) Removal of portable sanitation waste shall be conducted in a clean and sanitary manner by means of a vacuum hose to a leak proof tank truck on which all ports are properly valved and capped. The certified portable sanitation contractor is required to clean up all spillage during unit servicing.

(a) Service vehicles should be equipped with a portable sanitation waste tank adequately sized to service the units; a tank containing water for recharging the units; and when applicable or required, a fresh water tank filled with potable water to service the hand washing fixtures.

(b) Separate dedicated hoses shall be used for supplying potable water and servicing the portable sanitation unit. They shall be labeled or sized to prevent them from being interchanged and stored in such a manner to prevent cross contamination.

(5) It is the responsibility of property owners, employers, and event sponsors to ensure that portable sanitation units are serviced by a certified portable sanitation contractor or company in accordance with this Rule at least once every seven days, and more frequently as usage may require.

(6) Servicing shall include the use of a sanitizing solution for cleaning urinals and toilet seats, removing waste from containers, recharging containers with an odor controlling solution, and installing an adequate supply of toilet tissue.

(7) Portable sanitation waste from tank trucks must be disposed at a facility regulated by the Georgia Department of Natural Resources, Environmental Protection Division.

(8) A manifest or route sheet must be maintained by the portable sanitation company for a period of twelve months. The manifest or route sheet must include:

(a) Name or originator, event, sponsor;

(b) Address or route;

(c) Date and location of service;

(d) Date and location of final disposal; and

(e) Total of gallons being disposed.

(9) The county issued "Waste Removal and Disposal Permit" number, including the name of the person or firm engaging in the removal of portable sanitation unit waste, shall be lettered on both sides of each vehicle. Letters and numerals shall not be less than two inches in height and shall be readily visible.

(10) Every vehicle used for service and removal of portable sanitation unit waste shall be equipped with watertight tanks or body and properly maintained. Liquid wastes shall not be transported in open bodied vehicles. All pumps, hose lines, valves and fittings shall be maintained as to prevent leakage. The truck must also have adequate means to clean each unit in place with sanitizing solution.

(11) Signage or placard stating "Do Not Drink" shall be affixed to the fresh water supply tank and all portable hand washing fixtures. The fresh water supply tank, hand wash fixture's water supply tank and gray water storage tank must be cleaned with 1 to 10 bleach to water solution (typically 3 to 6 % sodium hypochlorite solution) or equivalent at least every forty five days to prohibit the growth of algae.

Cite as Ga. Comp. R. & Regs. R. 511-3-6-.05
Authority: O.C.G.A. Sections 31-2A-6, 31-12-8, 31-27-9, 12-8-1.
History. Original Rule entitled "Removal and Disposal of Waste from Portable Sanitation Units" adopted. F. Oct. 16, 2013; eff. Nov. 5, 2013.

Rule 511-3-6-.06. Certification of Portable Sanitation Contractors and Companies.

(1) The Department shall be responsible for certifying individuals and companies performing services related to furnishing, renting, servicing, and maintenance of a portable sanitation unit.

(2) There shall be established an Advisory Committee to assist the Department with certification, recertification and decertification of all individuals required to be certified under Chapter 511-3-6. The Committee shall include at least two individuals that are currently certified as portable sanitation contractors. The Advisory Committee will assist the Department with the following:

(a) Establishing written tests to be administered for the various certifications, and revising such tests from time to time;

(b) Reviewing complaints regarding poor quality of work and unlawful or unethical practices, and recommending appropriate action by the Department;

(c) Reviewing the content of educational programs and events and assigning appropriate continuing education units;

(d) Reviewing the established criteria for certification in the assigned specialties and recommending such modifications as are appropriate for the ongoing management of the process; and

(e) Providing such services or advice as will assist the Department and Health Authorities in the effective enforcement of this Chapter.

(3) Certification of Portable Sanitation Contractors:

(a) Individuals engaged in the cleaning installation and maintenance of portable sanitation units may obtain certification from the Department as a Portable Sanitation Contractor meeting the following requirements:

1. Must be at least 18 years of age;

2. Must show proof of ownership or employment with a certified Portable Sanitation Company currently operating in good standing with the Department; and

3. Must successfully complete a written or oral examination concerning properly maintaining a portable sanitation unit in a clean, sanitary, and functional condition for the protection of human health, safety and welfare. Individuals currently certified by the Portable Sanitation Association International as a Health and Safety Certified Portable Sanitation Worker are excluded from the examination requirement in this Chapter. However, all other requirements must be completed prior to receiving a Certified Portable Sanitation Contractor certificate.

4. The certification period is two years.

(b) Certification may be renewed for a Portable Sanitation Contractor upon meeting the following requirements:

1. Must have no unresolved or outstanding disciplinary actions related to the portable sanitation industry;

2. Must submit a copy of business license or other verification of business or submit proof of employment with a certified portable sanitation company.

3. Must not have committed any illegal acts related to this Chapter during the certification period;

(c) A Portable Sanitation Contractor whose certification has expired may be recertified upon meeting the following requirements:

1. Must have no unresolved or outstanding disciplinary action related to the portable sanitation industry.

2. Must not have committed any illegal service or maintenance acts related to this Chapter following the expiration of the certification.

3. Must submit a copy of business license or other verification of business or submit proof of employment with a certified Portable Sanitation Company; and

4. If more than two years have passed since the certification expired, the applicant must take and pass the Portable Sanitation Contractor exam in addition to meeting the continuing education requirement.

(a) A decertified Portable Sanitation Contractor may be recertified upon meeting the following requirements:

1. Must wait at least two years after decertification to re-apply:

2. Must have no unresolved or outstanding disciplinary actions;

3. Must not have committed any illegal acts related to this Chapter during the decertification period;

4. Must submit a copy of business license or other verification of business or submit proof of employment with a certified portable sanitation company; and

5. Must take and pass the Portable Sanitation Contractor Exam with a score of 70 or above.

(4) Certification of Portable Sanitation Companies

(a) Any person engaged in the business of cleaning, pumping, installation, and maintenance of portable sanitation units may be certified as a Portable Sanitation Company by the Department upon meeting the following requirements:

1. Must employ at least one person who is a Certified Portable Sanitation Contractor in good standing with the Department:

2. May not associate with any person as owner, part owner, manager, or employee, whose certification has been revoked under this Chapter 511-3-6, unless and until such person has been recertified; and

3. The certification period is two years.

(b) Certification may be renewed for a Portable Sanitation Company upon meeting the following requirements:

1. Must have no unresolved or outstanding disciplinary action related to this Chapter;

2. Owner or designee must obtain at least six hours of continuing education approved by the Department; and

3. Must not have committed any illegal acts related to this Chapter during the certification period.

(c) A Portable Sanitation Company whose certification has expired may be recertified upon meeting the following requirements:

1. Must have no unresolved or outstanding disciplinary action related to this Chapter;

2. Must submit evidence of the owner's or their designee's completion of six hours of continuing education as approved by the Department;

3. Must not have committed any illegal acts related to this Chapter during the expiration period.

(d) A decertified Portable Sanitation Company may be recertified upon meeting the following requirements:

1. Must wait at least two years after decertification to re-apply;

2. Must have no unresolved or outstanding disciplinary action relating to this Chapter; and

3. Must not have committed any illegal acts related to this Chapter during the decertification period;

(5) Fees

(a) The certification examination fee is $50.00.

(b) The Portable Sanitation Company fee shall be $300.00 for the two year certification period. Persons who achieve a passing score on the examination will be issued a numbered certificate upon receipt of the certification fee.

(c) The renewal fee shall be $300.00.

Cite as Ga. Comp. R. & Regs. R. 511-3-6-.06
Authority: O.C.G.A. Sections 31-2A-6, 31-12-8, 31-27-9, 12-8-1.

History. Original Rule entitled "Certification of Portable Sanitation Contractors and Companies" adopted. F. Oct. 16, 2013; eff. Nov. 5, 2013.

Rule 511-3-6-.07. Decertification of Portable Sanitation Contractors and Companies.

(1) The Department may take disciplinary action, including suspension and revocation of the certification if the Department finds that the contractor or company has failed to comply or maintain compliance with O.C.G.A. Title 31 or this Chapter 511-3-6, or has committed any of the following acts:

(a) Misrepresentation or falsification of information on any application or document submitted to the Department or any Health Authority; or

(b) Conviction in any court of a felony or crime of moral turpitude. In the case of a corporation or other business entity, this provision shall apply in the event of such a conviction of any person associated with the company as an owner, partner, officer, director, or manager.

(1) The holder of any certification that is revoked under this Rule shall not be eligible for recertification for a period of at least twenty-four months. In the case of a Portable Sanitation Company, this provision also shall apply to partners, co-owners, officers, directors, and stockholders of corporate providers involved in the company.

Cite as Ga. Comp. R. & Regs. R. 511-3-6-.07
Authority: O.C.G.A. Sections 31-2A-6, 31-12-8, 31-27-9, 12-8-1.
History. Original Rule entitled "Decertification of Portable Sanitation Contractors and Companies" adopted. F. Oct. 16, 2013; eff. Nov. 5, 2013.

Rule 511-3-6-.08. Appendix.

Table 1:Minimum Number of Portable Sanitation Units at Construction Sites

Number of Workers*	Minimum Number of Units Serviced Weekly**
20 or less ..	1 Toilet per 20 Workers
21 or more ..	1 Additional Toilet per 40 Workers
200 or more ..	1 Additional Toilet per 50 Workers

29 CFR 1926.51 OSHA Regulations for Toilets at Construction Sites

***** *The number of portable sanitation units required shall be determined by the maximum number of workers present on a regular 8 hour shift. Shifts lasting longer than 8 hours (40 hour work week) should double the number of portable sanitation units.*

***** *"Servicing" refers to the emptying of waste and the cleaning of the portable sanitation unit.*

Table 2. Portable Sanitation Units for Special Events Planning

AVERAGE CROWD SIZE	AVERAGE HOURS AT THE EVENT *									
	1	**2**	**3**	**4**	**5**	**6**	**7**	**8**	**9**	**10**
500	2	4	4	5	6	7	9	9	10	12
1,000	4	6	8	8	9	9	11	12	13	13
2,000	5	6	9	12	14	16	18	20	23	25
3,000	6	9	12	16	20	24	26	30	34	38
4,000	8	13	16	22	25	30	35	40	45	50
5,000	12	15	20	25	31	38	44	50	56	63
10,000	15	25	38	50	63	75	88	100	113	125
15,000	20	38	56	75	94	113	131	150	169	188
20,000	25	50	75	100	125	150	175	200	225	250
25,000	38	69	99	130	160	191	221	252	282	313
30,000	46	82	119	156	192	229	266	302	339	376
35,000	53	96	139	181	224	267	310	352	395	438
40,000	61	109	158	207	256	305	354	403	452	501
45,000	68	123	178	233	288	343	398	453	508	563
50,000	76	137	198	259	320	381	442	503	564	626
55,000	83	150	217	285	352	419	486	554	621	688
60,000	91	164	237	311	384	457	531	604	677	751
65,000	98	177	257	336	416	495	575	654	734	813
70,000	106	191	277	362	448	533	619	704	790	876
75,000	113	205	296	388	480	571	663	755	846	938
80,000	121	218	316	414	512	609	707	805	903	1001
85,000	128	232	336	440	544	647	751	855	959	1063
90,000	136	246	356	466	576	686	796	906	1016	1126
95,000	143	259	375	491	607	724	840	956	1072	1188
100,000	151	273	395	517	639	762	884	1006	1128	1251

Based on "Portable Restroom Requirements at Special Events and Crowd Gatherings" Center for Business and Industrial Studies, University of Missouri-St. Louis

** Determine the appropriate potable sanitation units needed form the table above.*

** For each sewered toilet available onsite, subtract 1 from the previously calculated number.*

** If alcoholic beverages are to be served, add 25% to the base number.*

** For peak crowd numbers that fall between chart numbers, round up to the next base number.*

** Units shall be provided in accordance with the Georgia Accessibility Code following*

state or local requirements.

** Table based on units being serviced daily*

Cite as Ga. Comp. R. & Regs. R. 511-3-6-.08
Authority: O.C.G.A. Sections 31-2A-6, 31-12-8, 31-27-9, 12-8-1.
History. Original Rule entitled "Appendix" adopted. F. Oct. 16, 2013; eff. Nov. 5, 2013.

Subject 511-3-7. GEORGIA SMOKEFREE AIR ACT OF 2005.

Rule 511-3-7-.01. Authority.

The Department of Public Health and the county boards of health and their duly authorized agents are authorized and empowered to enforce compliance with the Georgia Smokefree Air Act of 2005, and the rules and regulations adopted and promulgated in connection therewith. The county boards of health may annually request other governmental and educational agencies having facilities within the area of the local government to establish local operating procedures in cooperation and compliance with this chapter.

Cite as Ga. Comp. R. & Regs. R. 511-3-7-.01
Authority: O.C.G.A. Secs. 31-2A-6, 31-12A-10 to 31-12A-12.
History. Original Rule entitled "Authority" adopted. F. Sep. 20, 2013; eff. Oct. 10, 2013.

Rule 511-3-7-.02. Purpose.

These regulations establish standards in accordance with Title 31 Chapter 12A to protect the citizens of Georgia from exposure to secondhand smoke in most enclosed indoor public areas to which the public is invited or in which the general public is permitted. The purpose of the Georgia Smokefree Air Act of 2005 is to preserve and improve the health, comfort and environment of the people of this State, including children, adults, and employees, by limiting exposure to tobacco smoke.

Cite as Ga. Comp. R. & Regs. R. 511-3-7-.02
Authority: O.C.G.A. Secs. 31-2A-6, 31-12A-10 to 31-12A-12.

History. Original Rule entitled "Purpose" adopted. F. Sep. 20, 2013; eff. Oct. 10, 2013.

Rule 511-3-7-.03. Applicability.

These rules shall apply as follows:

(1) Smoking shall be prohibited in all enclosed public places in this state except as permitted in *Code Section 31-12A-6*.

(2) Smoking shall be prohibited in all enclosed areas within places of employment except as permitted in *Code Section 31-12A-6*. Such prohibition on smoking shall be communicated to all current employees and to all prospective employees upon their application for employment.

   (a) The building owner, agent, operator, person in charge or proprietor of a public place shall conspicuously post the work place policy pertaining to smoking in a position clearly visible to all employees.

   (b) The building owner, agent, operator, person in charge or proprietor of a public place shall provide the work place policy pertaining to smoking in materials provided to new employees.

(3) These rules and regulations shall not be construed to permit smoking where it is otherwise restricted by other applicable laws.

(4) These rules and regulations shall be liberally construed so as to further the purposes of the Smokefree Air Act of 2005.

Cite as Ga. Comp. R. & Regs. R. 511-3-7-.03
Authority: O.C.G.A. Secs. 31-2A-6, 31-12A-10 to 31-12A-12.
History. Original Rule entitled "Applicability" adopted. F. Sep. 20, 2013; eff. Oct. 10, 2013.

Rule 511-3-7-.04. Definitions.

The following definitions shall apply in the interpretation of these rules and regulations:

(a) "Act" means the Smokefree Air Act of 2005.

(b) "County Board of Health" means a board established in accordance with Chapter 3 of Title 31 of the Official Code of Georgia Annotated.

(c) "Department" means Georgia Department of Public Health.

(d) "Private Club" means a facility that is not available for public use, control, or participation and is intended for or restricted to the use of a particular group or class of persons.

(e) "Reasonable Distance" means that smoking shall occur at a distance outside any enclosed area where smoking is prohibited sufficient to ensure that tobacco smoke does not enter the area through entrances, windows, ventilation systems or any other means, and to ensure that those indoors and those entering or leaving the smokefree area are not involuntarily exposed to secondhand tobacco smoke.

(f) "Ventilation System" means the continuous supply and removal of air with respect to a space, either by natural or mechanical means, to control chemical and physical hazards as well as to maintain temperature and relative humidity.

Cite as Ga. Comp. R. & Regs. R. 511-3-7-.04
Authority: O.C.G.A. Secs. 31-2A-6, 31-12A-10 to 31-12A-12.
History. Original Rule entitled "Definitions" adopted. F. Sep. 20, 2013; eff. Oct. 10, 2013.

Rule 511-3-7-.05. Signage.

The following specifications must be met to comply with the requirement related to 'No Smoking' signs.

(1) Visibility. 'No Smoking' signs or signs bearing the international 'No Smoking' symbol must be easily readable, be conspicuously posted, and must not be obscured in any way.

(2) Format. The words 'No Smoking', 'Smoking Permitted', 'Smoking Permitted, No One Under the Age of 18 Allowed', and 'No Smoking Beyond this Point' must not be less than 1.5 inches in height. These signs must bear the applicable annotated code section, '*O.C.G.A. § 31-12A-1et seq.*'.

(3) Smokefree Public Place. In a public place where smoking is prohibited, the building owner, agent, operator, person in charge or proprietor must conspicuously post a sign bearing the words 'No Smoking' or conspicuously post the international 'No Smoking' symbol on all entrances or in a position clearly visible on entry into the place.

(4) Smoking Area in a Public Place. In a public place where smoking is allowed in an enclosed area, the building owner, agent, operator, person in charge or proprietor must conspicuously post a sign bearing the words 'Smoking Permitted, No One Under the Age of 18 Allowed' on all entrances or in a position clearly visible on entry into the place.

(a) The building owner, agent, operator, person in charge or proprietor must conspicuously post a sign inside the exit of all smoking areas, if the exit leads to a smokefree area. The sign must bear the words, 'No Smoking Beyond this Point' or bear the international 'No Smoking' symbol.

(5) Exempt Status. The building owner, agent, operator, person in charge or proprietor of a public place that is exempt from the Act must conspicuously post a sign using the words 'Smoking Permitted, No One Under the Age of 18 Allowed' on all entrances or in a position clearly visible on entry into the place. Private residences that are not used as a licensed child care, adult day care, or health care facility are not required to comply with this provision.

Cite as Ga. Comp. R. & Regs. R. 511-3-7-.05
Authority: O.C.G.A. Secs. 31-2A-6, 31-12A-10 to 31-12A-12.
History. Original Rule entitled "Signage" adopted. F. Sep. 20, 2013; eff. Oct. 10, 2013.

Rule 511-3-7-.06. Air Handling Systems.

(1) Statement. The building owner, agent, operator, person in charge or proprietor of a public place that includes an enclosed area in which smoking is permitted shall keep on file a written statement from a conditioned air contractor licensed by the State of Georgia or from an appropriately certified professional that the air handling system serving the enclosed area meets the requirements as set forth in the Act.

(2) Air Balancing Firm Statement. The building owner, agent, operator, person in charge or proprietor of a public place that includes an enclosed area in which smoking is permitted shall keep on file a written statement from a certified air balancing firm that the air handling system performs as designed so as to meet the requirements as set forth in the Act.

(3) Manufacturer Guidelines. The building owner, agent, operator, person in charge or proprietor of a public place that includes an enclosed area in which smoking is permitted shall keep on file manufacturer guidelines and specifications for the air handling system(s) in use.

(4) Maintenance Records and Logs. The building owner, agent, operator, person in charge or proprietor of a public place that includes an enclosed area in which smoking is permitted shall keep on file all the maintenance records and logs for the current and previous year for the air handling system(s) in use.

(5) Access to Records. The building owner, agent, operator, person in charge or proprietor of a public place must provide the statement from the licensed contractor, air balancing firm, or certified professional for inspection upon request by the Department, county boards of health, and their duly authorized agents within three working days of the request.

Cite as Ga. Comp. R. & Regs. R. 511-3-7-.06
Authority: O.C.G.A. Secs. 31-2A-6, 31-12A-10 to 31-12A-12.
History. Original Rule entitled "Air Handling Systems" adopted. F. Sep. 20, 2013; eff. Oct. 10, 2013.

Rule 511-3-7-.07. Hours of Operation.

A smoke free public place must prohibit smoking twenty four hours per day in any area that does not meet the requirements pertaining to enclosed areas and smoking areas as specified in the Act.

Cite as Ga. Comp. R. & Regs. R. 511-3-7-.07
Authority: O.C.G.A. Secs. 31-2A-6, 31-12A-10 to 31-12A-12.
History. Original Rule entitled "Hours of Operation" adopted. F. Sep. 20, 2013; eff. Oct. 10, 2013.

Rule 511-3-7-.08. Outdoor Smoking Areas.

(1) Reasonable Distance.

(a) The building owner, agent, operator, person in charge or proprietor of a public place may designate an outdoor smoking area that is located a reasonable distance from any entrance, exit, window, vent, or air intake system of a building where smoking is prohibited.

(b) If the location of an entrance, exit, window, vent, or air intake system of a building where smoking is prohibited or if the location of a barrier, such as a wall, property line, parking lot, or street makes the reasonable distance requirement impossible to meet, then the building owner, agent, operator, person in charge or proprietor of a public place must maximize the distance between the outdoor smoking area and the entrance, exit, window, or air intake system of a building where smoking is prohibited.

(2) Ashtrays. Any ashtrays located in an outdoor smoking area shall be placed a reasonable distance from any entrance, exit, window, vent, or air intake system.

Cite as Ga. Comp. R. & Regs. R. 511-3-7-.08
Authority: O.C.G.A. Secs. 31-2A-6, 31-12A-10 to 31-12A-12.
History. Original Rule entitled "Outdoor Smoking Areas" adopted. F. Sep. 20, 2013; eff. Oct. 10, 2013.

Rule 511-3-7-.09. Enforcement.

(1) The Department and the county boards of health and their duly authorized agents shall enforce the Act.

(a) Any citizen who desires to register a complaint under this Act may initiate enforcement with the Department and the county boards of health and their duly authorized agents.

(b) The Department and the county boards of health and their duly authorized agents may, while an establishment is undergoing otherwise mandated inspections, inspect for compliance with this Act.

(c) In addition to the remedies provided by this Act, the Department and the county boards of health and their duly authorized agents may apply for injunctive relief to enforce the provisions of this Act in any court of competent jurisdiction.

(2) An owner, manager, operator, or employee of an establishment regulated by this article shall inform persons violating this article of the appropriate provisions hereof.

(3) The enactment of any other local law, rules and regulations of state or local agencies, and local ordinances prohibiting smoking that are more restrictive than this Act are enforceable.

Cite as Ga. Comp. R. & Regs. R. 511-3-7-.09
Authority: O.C.G.A. Secs. 31-2A-6, 31-12A-10 to 31-12A-12.
History. Original Rule entitled "Enforcement" adopted. F. Sep. 20, 2013; eff. Oct. 10, 2013.

Rule 511-3-7-.10. Penalties.

Individuals found in violation of the Act shall be guilty of a misdemeanor and, if convicted, shall be punished by a fine not less than $100.00 and not more than $500.00.

Cite as Ga. Comp. R. & Regs. R. 511-3-7-.10
Authority: O.C.G.A. Secs. 31-2A-6, 31-12A-10 to 31-12A-12.
History. Original Rule entitled "Penalties" adopted. F. Sep. 20, 2013; eff. Oct. 10, 2013.

Subject 511-3-8. BODY ART.

Rule 511-3-8-.01. Authority.

The legal authority for this Chapter is Chapter 31-40 of the Official Code of Georgia Annotated.

Cite as Ga. Comp. R. & Regs. R. 511-3-8-.01
Authority: O.C.G.A. § 31-40-1*et seq*.
History. Original Rule entitled "Applicability" adopted. F. Sep. 20, 2013; eff. Oct. 10, 2013.
Repealed: F. Jun. 20, 2014; eff. July 10, 2014.
Adopted: New Rule entitled "Authority." F. Mar. 8, 2023; eff. Apr. 6, 2023, as specified by the Agency.

Rule 511-3-8-.02. Purpose.

The purpose of this Chapter is to establish reasonable standards for individuals performing body art procedures and for the facilities in which those procedures are provided. If followed, such standards should ensure the health and safety of all individuals performing and receiving these services. They also provide for the permitting and regular inspection of studios wherein Body Art activities are to be performed and contain enforcement provisions including revocation of the certification of any person or permit of any studio deemed in violation of this Chapter.

Cite as Ga. Comp. R. & Regs. R. 511-3-8-.02
Authority: O.C.G.A. § 31-40-1*et seq*.
History. Original Rule entitled "Definitions" adopted. F. Sep. 20, 2013; eff. Oct. 10, 2013.
Repealed: F. Jun. 20, 2014; eff. July 10, 2014.
Adopted: New Rule entitled "Purpose." F. Mar. 8, 2023; eff. Apr. 6, 2023, as specified by the Agency.

Rule 511-3-8-.03. Applicability.

(1) These regulations do not apply to a physician or osteopath licensed under O.C.G.A. Chapter 34 of Title 43, or to a technician acting under the direct supervision of such licensed physician or osteopath.

(2) Individuals who pierce only the lobe of the ear (and not the ear cartilage, nose or eyebrows, etc.) with a pre-sterilized single-use stud-and clasp ear piercing system are exempt from these regulations, provided that such ear-piercing systems conform to the manufacturer's directions on use and applicable FDA requirements.

(3) The Department and the applicable Health Authority retain the authority to investigate consumer complaints and outbreaks relating to the alleged misuse or improper disinfection of ear-piercing systems.

(4) These rules shall take effect six months after official posting by the Secretary of State.

Cite as Ga. Comp. R. & Regs. R. 511-3-8-.03
Authority: O.C.G.A. §§ 31-40-1, 31-40-6.
History. Original Rule entitled "Provisions" adopted. F. Sep. 20, 2013; eff. Oct. 10, 2013.
Repealed: F. Jun. 20, 2014; eff. July 10, 2014.
Adopted: New Rule entitled "Applicability." F. Mar. 8, 2023; eff. Apr. 6, 2023, as specified by the Agency.

Rule 511-3-8-.04. Definitions.

(1) "Antimicrobial solution" means any solution capable of killing or used to retard the growth of microorganisms approved for application to human skin, and includes all products labeled accordingly, as approved by the FDA; when referring to antimicrobial mouthwash, only those approved for use may be allowed in the studio, such as hydrogen peroxide, alcohol-based solution and others commonly found in hospital or dental settings.

(2) "Antiseptic" means an agent or substance that will destroy or inhibit the growth and development of infectious microorganisms on human skin or mucous membranes.

(3) "Aseptic technique" means to render or maintain free from infectious material so as to prevent transfer or transmission of infectious agents.

(4) "ASTM" means the American Society for Testing Materials International.

(5) "Autoclave" means an apparatus (chamber or cassette) for sterilization of equipment utilizing steam pressure at a specific temperature over a period of time per manufacturer's specifications. For the purposes of this Chapter, all chamber and cassette autoclaves shall be Class B, Class S, or other medical grade autoclave as specified by manufacturer for sterilization of body art equipment and jewelry.

(6) "Biomedical waste" means the following:

(a) Pathological waste, which means all recognizable human tissues which are removed during procedures;

(b) Biological waste, which means blood and blood products, exudates, secretions, suctioning, and other body fluids which contains free liquids and cannot be or are not directly discarded into a municipal sewer system. The term does not include materials, such as wipes or paper towels, containing small amounts of blood or body fluids that would not drip if the material were compressed;

(c) Sharps, which means any discarded article that may cause punctures or cuts, such as needles and razor blades; and

(d) Discarded equipment and parts, excluding expendable supplies and materials included in paragraphs (a) through (c) of this subsection, which have not been decontaminated, and which were in contact with infectious agents.

(7) "Blood" means human blood, human blood components, and products made from human blood.

(8) "Bloodborne pathogens" means pathogenic microorganisms present in human blood that can cause disease in humans. These pathogens include but are not limited to Hepatitis B virus (HBV), Hepatitis C virus (HCV), and Human Immunodeficiency virus (HIV).

(9) "Board of Health" means the local County Board of Health or Health Authority.

(10) "Body art" means a tattoo or piercing placed on the body of a person for aesthetic or cosmetic purposes. This definition does not include practices considered medical procedures by the Georgia Medical Composite Board, such as implants under the skin, which are prohibited unless such medical procedures are performed by a person licensed by the Georgia Medical Composite Board.

(11) "Body artist" means any person who performs body art. Such term shall not include a physician or osteopath licensed under Chapter 34 of Title 43, or a technician acting under the direct supervision of such licensed physician or osteopath.

(12) "Body artist certification" means a certification issued by the Department to a specifically identified person who is qualified to engage in the practice of body art in accordance with these regulations and in conjunction with a permitted studio.

(13) "Body Art Advisory Committee" means a committee that may be established by the Department to provide technical guidance on the practice of body art. If established, the committee shall be composed of one individual from the state environmental health program, one District Environmental Health Director, one County Environmental Health Specialist, one person with infection control training, and two members of the body art profession with current certification.

(14) "Body Art Studio" means any facility or building on a fixed foundation wherein a body artist performs body art, whether or not for profit.

(15) "Body Art Studio permit" means Health Authority approval in writing authorizing the permit holder to operate a Body Art Studio for the purpose of engaging in the practice or business of body art procedures. Health Authority approval shall be granted solely for the practice of body art pursuant to these regulations, and the following types of Body Art Studio permits shall be issued: tattoo, body piercing, and microblading.

(16) "Body piercing" means puncturing or penetrating the skin or mucosa of a client for the purpose of inserting jewelry or other adornment into the body for non-medical purposes; body piercing includes ear piercing, except when ear piercing procedure is performed with a pre-sterilized single-use stud and clasp ear-piercing system (Piercing Gun) conforming to the manufacturer's directions on use and applicable FDA requirements.

(17) "Cleaning/clean room" means the area in a Body Art Studio used in the sterilization, sanitation or other cleaning of instruments or other equipment used for the practice of body art and shall be separated from any other area in the studio by means of doors, nonabsorbent curtains, or similar approved partition extending from floor to ceiling or a height of eight feet.

(18) "Client" means an individual upon whom one or more body art procedures are to be performed.

(19) "Contaminated" means the presence or the reasonably anticipated presence of blood, other potentially infectious materials, or potentially harmful chemicals on an item or surface.

(20) "Contaminated waste" means any liquid or semi-liquid blood or other potentially infectious material; contaminated items that would release blood or other potentially infectious material in a liquid or semi-liquid state if compressed; items on which there is dried blood or other potentially infectious material, and which are capable of releasing

these materials during handling; sharps and any wastes containing blood or other potentially infectious materials.

(21) "Convention" means a large meeting of people who gather to talk about their shared work or other interests or to make decisions as a group or to perform body art procedures, such as an industry trade show.

(22) "Cosmetic tattoo" means a tattoo, by someone other than a licensed physician, which includes but is not limited to microblading of the eyebrow, lips, and other parts of the body for beauty marks, hair imitation, or areola repigmentation. This term includes any procedures whether referred to as but not limited to, microdermapigmentation, micropigment implantation, micro-needling with the use of pigment or any other similar procedure and for the purpose of this Chapter has the same meaning as "tattoo."

(23) "Critical violation" means a violation of this Chapter which poses a serious hazard to health and safety. Critical violations shall include but not limited to the following:

(a) Autoclave does not meet minimum time, pressure, or temperature requirements, or written standard operation procedures are not established or approved by the Health Authority;

(b) Lack of a negative spore test on a minimum frequency of every 40 hours of operation of the autoclave but not less than on a monthly basis;

(c) Non-disposable tubes and needles are not sterilized, packaging has been compromised or contaminated, or expiration date has been exceeded;

(d) Work area is not equipped as required or is not stocked;

(e) Reuse of single use articles;

(f) Sterile instruments are not properly handled to prevent contamination;

(g) Body artists with exposed infectious lesions on hands and arms not restricted from body art procedures;

(h) Body artists and employees not practicing proper cleanliness and good hygienic practices;

(i) Water supply not approved, hot and cold running water under pressure not available, or written emergency procedure for water not established before or approved for a studio operating during an interruption of water;

(j) Cross connection allowing back-siphonage present in plumbing system;

(k) Hand washing facilities not available or accessible for body artists and employees;

(l) Toxic items not properly stored, labeled, or used;

(m) Prohibited procedures performed within the studio; and

(n) Non-certified artist performing procedures.

(24) "Decontamination" means the use of physical or chemical means to remove, inactivate, or destroy bloodborne pathogens on a surface or item to the point where they are no longer capable of transmitting infectious particles and the surface or item is rendered safe for handling, use, or disposal.

(25) "Department" means the Georgia Department of Public Health or its agents.

(26) "Disinfectant" means a solution registered as a disinfectant by the U.S. Environmental Protection Agency (EPA) and intended to destroy or inactivate specific viruses, bacteria, or fungi on clean, inanimate surfaces. Labeling should specifically state that the product is bactericidal, virucidal, fungicidal, and tuberculocidal.

(27) "Disinfection" means the destruction of disease-causing microorganisms on inanimate objects or surfaces, thereby rendering these objects safe for use or handling.

(28) "Easily cleanable" means that surfaces are readily accessible and made of such materials and finish and so fabricated to be smooth and non-absorbent such that residue may be effectively removed by normal cleaning methods.

(29) "Ear piercing" means the puncturing of the lobe of the ear with a pre-sterilized single-use stud-and clasp ear piercing system following manufacturer's instructions. Under no circumstance shall ear piercing studs and clasp be used anywhere on the body other than the lobe of the ear unless otherwise specified by the manufacturer.

(30) "EPA" means the United States Environmental Protection Agency.

(31) "EPD" means the Georgia Department of Natural Resources, Environmental Protection Division.

(32) "Equipment" means all machinery, including fixtures, containers, vessels, tools, devices, implements, furniture, display and storage areas, sinks, and all other items used in connection with the operation of a Body Art Studio.

(33) "FDA" means the United States Food and Drug Administration.

(34) "Germicidal solution" means any solution which destroys microorganisms and is so labeled.

(35) "Gloves" means medical grade disposable single use gloves labeled for surgical or examination purposes. Vinyl gloves are not allowed to be used to perform body art procedures.

(36) "Guest body artist" means a visiting body artist, tattooist, body piercer, or microblader, not certified by the Department possessing a guest body artist permit issued by the Health Authority to perform body art in a permitted Body Art Studio.

(37) "Guest body artist permit" means a seven-day permit by the Health Authority which allows a person to practice body art as a tattoo artist, body piercer, or microblader, in accordance with this Chapter while under the direct supervision of a body artist holding a valid Body Artist Certification in the same category.

(38) "Handwash facilities" means an installed sink/lavatory providing an adequate supply of potable hot and cold running water under pressure, through a mixing valve or combination faucet, used solely for washing hands, arms, or other portions of the body. The facility shall include a soap dispenser, soap, and single use disposable towels in a covered dispenser.

(39) "Handwashing sink" means a lavatory or plumbing fixture especially placed for use in personal hygiene and designed for the washing of the hands in the facility, including an automatic handwashing facility.

(40) "Health Authority" means the local County Board of Health

(41) "Hot water" means water that attains and maintains a minimum temperature of 100°F.

(42) "Imminent health hazard" means any condition, deficiency, or practice which, if not corrected, is very likely to result in disease transmission, serious injury, or loss of life to any person. If an imminent health hazard exists because of an emergency such as a fire, flood, interruption of electrical or water service for two or more hours, sewage malfunction, misuse of poisonous or toxic materials, onset of an apparent bloodborne illness outbreak, serious injury, gross unsanitary occurrence or condition, or other circumstances that may endanger public health, then operations must be immediately discontinued, and the Health Authority must be notified.

(43) "Instruments" means hand pieces, needles, needle bars, and other instruments that may come in contact with a client's body or may be exposed to bodily fluids during any body art procedure.

(44) "ISO" means the International Standards Organization.

(45) "Jewelry" means any ornament used in any body art procedure which is inserted into a newly pierced area and meets the following minimum requirements:

(a) Steel that is ASTM F138 compliant or ISO 5832-1 compliant.

[Note: The EEC Nickel Directive is a regulation that requires a low rate of nickel release for all materials used for costume or fine jewelry, belt buckles, watches, or other metallic accessories with direct skin contact. It does not specify nor

prove that a material is safe to wear in the body; therefore, compliance with this directive alone is not sufficient for meeting the APP initial jewelry standards.]

(b) Steel that is ISO 10993-6, 10993-10 and/or 10993-11 compliant.

(c) Unalloyed titanium that is ASTM F67 or ISO 5832-2 compliant.

(d) Alloyed Titanium (Ti6Al4V ELI) that is ASTM F136 compliant or ISO 5832-3 compliant.

(e) Alloyed Titanium (Ti6Al7Nb ELI) that is ASTM F1295 compliant or ISO 5832-11 compliant.

(f) Polytetrafluoroethylene (PTFE) that is ASTM F754 compliant.

(g) Any polymer or plastic material that is ISO 10993-6, 10993-10 or 10993-11 compliant and/or meets the United States Pharmacopeia (USP) Class VI material classification.

(h) Solid 14 karat or higher yellow, white, or rose gold that is nickel and cadmium free.

(i) Gold jewelry used for initial piercing may not be:

1. Plated, unless using materials approved by this standard over solid 14 karat or higher yellow, white, or rose gold that is 14k or higher, or white rhodium.

2. Gold-filled

3. Gold overlay/vermeil

(j) Solid unalloyed or alloyed platinum that is cadmium, nickel, and lead free.

(k) Unalloyed Niobium (Nb) that is ASTM B392 compliant. This includes but is not limited to:

1. Commercial grade 2 Niobium

2. Commercial grade 4 Niobium that contains 1% Zirconium

(l) Glass that is lead free. This includes but is not limited to:

1. Fused quartz

2. Borosilicate

3. Soda-lime

(m) All threaded or press-fit jewelry used for initial piercing must have internal tapping (no threads on exterior of posts and barbells).

(n) For body jewelry purposes, surfaces and ends must be smooth and free of nicks, scratches, burrs, stamps, hallmarks, polishing compounds, and other potentially harmful residues.

(o) Metals must have a consistent mirror finish on surfaces that frequently come in contact with tissue.

(p) All jewelry used for initial piercing on people above the age of twelve must be ASTM F2999 compliant.

(q) All jewelry used for initial piercing on people age twelve and under must be ASTM F2923 compliant.

(r) Copies of the jewelry manufacturer's documentation, which verify compliance with standards, must be available for inspection on request.

(46) "Major structural modifications" means modifications in which the resulting structure differs significantly from what was originally approved by the Health Authority at the time of the Health Authority's issuance of the permit, including, but not limited to changes involving the addition, removal, or relocation of structurally existing walls, openings, floor or counters; or modifications to plumbing, mechanical, or electrical components other than decorative fixtures. It does not include minor cosmetic changes such as painting, moving equipment for detailed cleaning, detailed cleaning of physical facilities, replacing carpeting in the lobby area, or repairing damage to walls, floors, and ceilings.

(47) "Microblading of the eyebrow" means a form of cosmetic tattoo artistry where ink is deposited superficially in the upper three layers of the epidermis using a handheld or machine powered tool made up of needles known as a microblade to improve or create eyebrow definition, to cover gaps of lost or missing hair, to extend the natural eyebrow pattern, or to create a full construction if the eyebrows have little to no hair.

(48) "Minor" means an individual under the age of eighteen.

(49) "NSF" means the National Sanitation Foundation.

(50) "Occupational exposure" means reasonably anticipated skin, eye, mucous membrane, or parenteral contact with blood or other potentially infectious materials that may result from the performance of a body artist's or employee's duties.

(51) "OSHA" means the Occupational Safety and Health Administration.

(52) "Other potentially infectious material" means the following human body fluids: semen, vaginal secretions, saliva, and any other body fluid visibly contaminated with blood.

(53) "Permit" means Health Authority approval in writing authorizing the permit holder to operate a Body Art Studio for the purpose of engaging in the practice or business of body art procedures.

(54) "Permit holder" means the partnership, corporation, association, or the person or group of persons who maintain and control the Body Art Studio and personnel, and who are legally responsible for the operation of the studio.

(55) "Person" means an individual, any form of business or social organization or any other non-governmental legal entity, including but not limited to corporations, partnerships, limited-liability companies, associations, trusts, or unincorporated organizations.

(56) "Personal protective equipment" means specialized clothing or equipment, such as gloves or lap cloth, worn by a body artist or employee for protection against a hazard. General work clothes not intended to function as protection against a hazard are not considered to be personal protective equipment.

(57) "Physician" or "osteopath" means an individual licensed to practice medicine in Georgia pursuant to OCGA Chapter 34 Title 43.

(58) "Pierce" or "piercing" means body piercing.

(59) "Potable water" means water that is from an approved water system meeting Georgia Safe Drinking Water Standards

(60) "Proof of age" means any government issued State Driver's License, Military ID, Passport or US Passport Card, or State-Issued ID Card that describes the individual as eighteen years of age or older as applicable, contains a photograph and appears to be valid.

(61) "Safe materials" means articles manufactured for the specific purpose of body art procedures which are unlikely to cause injury or disease under proper use and care.

(62) "Sanitary" means clean and free of agents of infection or disease.

(63) "Sanitized" means the application of an EPA registered sanitizer on a cleaned surface by a process that provides sufficient concentration of chemicals for enough time to reduce the microorganism level, including pathogens, to a safe level on instruments and equipment in accordance with the label instructions.

(64) "Sewage" means human excreta, all water-carried waste, and liquid wastes from residences, buildings, commercial or industrial establishments.

(65) "Sharps" means any object, sterile or contaminated, that may intentionally or accidentally cut or penetrate the skin or mucosa.

(66) "Sharps container" means a puncture-resistant, leak-proof container that can be closed for handling, storage, transportation, and disposal that is labeled with the International Biohazard Symbol and specifically made for the disposal of sharps.

(67) "Single-use" or "single-service" means disposable products or items that are intended for one-time, one-person use and are properly disposed of by appropriate measures after use on each client. Single-use items include but are not limited to cotton swabs or balls, single-use instruments, tissues or paper products, paper or plastic cups, gauze and sanitary coverings, razors, piercing needles, stencils, ink cups, and protective gloves.

(68) "Solid waste" means refuse, garbage, trash, rubbish, and any other item which could cause an unsanitary condition or undesirable health and safety conditions.

(69) "Spore" means a dormant, non-reproductive body able to survive adverse environmental conditions including high temperatures, dryness, and lack of nourishment for long periods of time. Under the proper conditions, the spore may revert to an actively multiplying form of the bacteria, fungi, or protozoa.

(70) "Spore test" means a biological monitoring process in which resistant spore growth on test media is processed in a studio's autoclave to verify that it is functioning properly. A third-party culturing service must be engaged for this process to provide documentation serving as a tangible record and legal document verifying the autoclave's ability to achieve proper sterilization.

(71) "Sterilization" or "sterilize" means the use of a physical or chemical procedure by which all forms of microbial life, including bacteria, viruses, spores, and fungi are destroyed including highly resistant bacterial endospores. This is achieved by holding in a commercial, Class B, Class S, or other medical grade autoclave according to manufacturer's instructions as approved by the Health Authority.

(72) "Sterilization indicator" means a tape, strip, bag, or other device designed to change color to indicate that sterilization temperature has been achieved during the sterilization procedure.

(73) "Sterilizer" means an autoclave certified to meet generally accepted medical standards. See Autoclave.

(74) "Tattoo" means to mark or color the skin of any person by pricking in, inserting, or implanting indelible pigments or dyes under the skin, including without limitation cosmetic tattooing and microblading of the eyebrow.

(75) "Temporary Body Art Studio" means any location, place, facility, or business for which a permit has been granted to practice body art by the Health Authority for no more than

a period of seven consecutive days in connection with conventions or industry trade shows.

(76) "Temporary Body Artist" means any person not certified by the Department, who performs body art in a temporary Body Art Studio who is responsible for complying with applicable provisions of these regulations. The permit to practice body art by the Health Authority is granted for no more than a period of seven consecutive days only for the purpose of product demonstration in connection with conventions or industry trade shows.

(77) "Temporary Body Artist Permit" means the issuance of a seven-day permit by the Health Authority which allows a person to practice body art as a tattoo artist, body piercer, or microblader, in accordance with this Chapter for the purpose of product demonstration in connection with conventions or industry trade shows.

(78) "Ultrasonic cleaning unit" means a device approved by the Health Authority with a lid, physically large enough to fully submerge instruments in liquid, which removes foreign matter from the instruments by means of high energy and high frequency oscillations transmitted through the contained liquid.

(79) "Universal precautions", also known as "standard precautions", means treating all blood and body fluids as if they contain bloodborne pathogens and taking proper precautions to prevent the spread of any bloodborne pathogens.

(80) "Waste" means solid waste, sewage, blood and body fluids or other waste resulting from the operation of a Body Art Studio.

(81) "Work area" or "workstation" means an area where clients receive body art from an individual body artist.

Cite as Ga. Comp. R. & Regs. R. 511-3-8-.04
Authority: O.C.G.A. § 31-40-5.
History. Original Rule entitled "Locations of Land Disposal Sites" adopted. F. Sep. 20, 2013; eff. Oct. 10, 2013.
Repealed: F. Jun. 20, 2014; eff. July 10, 2014.
Adopted: New Rule entitled "Definitions." F. Mar. 8, 2023; eff. Apr. 6, 2023, as specified by the Agency.

Rule 511-3-8-.05. Permits.

(1) Body Art Studio permits.

(a) No person shall operate a Body Art Studio without first obtaining a Body Art Studio permit in accordance with the timeframes specified in these rules. Upon the effective date of this Chapter, as stated in Section 511-3-8-.03(4), existing Body Art Studios shall have one year to obtain and display a valid Department of Public

Health Body Art Studio permit issued by the Health Authority. This deadline may be extended for all applicants upon public notice by the Department on its website.

(b) Permits shall be issued by the Health Authority on forms prescribed by the Department and shall designate one or more specialties which may be practiced in the studio: tattooing, piercing, or microblading. The Health Authority may authorize an electronic signature method for signing prescribed forms.

(c) Permits shall only be issued to a single permit holder operating at a single location. A permit shall not be transferable from one place to another, or from one person to another.

(d) An applicant for a Body Art Studio permit shall provide written evidence of satisfactory compliance with the provisions of this Chapter and any other applicable laws and regulations. The permit holder shall be responsible for maintaining compliance with the requirements of this Chapter and any other applicable laws and regulations.

(e) The permit shall be displayed near the front entrance of the studio within fifteen feet of the front or primary public door and between five feet and seven feet from the floor, and in an area where it can be read at a distance of one foot away or, if for some reason this is impractical, in an area approved by the Health Authority.

(f) The permit shall expire when the Body Art Studio ceases to operate, relocates, or has a change of ownership. For purposes of this subsection, a "change of ownership" means the transfer of a 50% or greater interest in the studio to a person or entity not currently holding an interest.

(g) An operating permit is not transferable from one studio to another.

(h) An application for a Body Art Studio must be submitted to the Health Authority no less than fourteen days prior to the start of construction or major structural modifications.

(i) The applicant shall certify in its application the names and exact duties of the employees and body artists who will be responsible for carrying out the rules and policies adopted by the permit holder. The following information shall be included for each such person:

1. Valid driver's license or Government issued ID;

2. Date of birth (DOB);

3. Home address;

4. Telephone numbers; and

5. Department-issued Body Artist Certification of all artists who will practice in the studio.

(j) Each application for a permit shall be accompanied by an 8 ½" x 11" or larger page containing a detailed, to-scale floor plan of the Body Art Studio. Such plan shall show the accurate placement of each of the following: windows, doors, chairs, tables, sinks, restrooms, waiting area, and all equipment placement whether affixed or not for clients or staff, and shall include room measurements.

(k) Specification sheets for all equipment to be in the studio shall be provided as determined by the Health Authority. Studios using all commercially purchased, individually packaged, sterile, single-use, disposable jewelry and instruments shall provide adequate manufacturer documentation to avoid requirements for an ultrasonic cleaner and autoclave.

(l) The ownership of the studio shall be fully disclosed in its application for a permit. The individual owners shall be listed, if a sole proprietorship or partnership; the members, if a limited liability company; and the shareholders, if a corporation. No permit shall be issued if any person with an ownership interest in the proposed studio is under eighteen years old, has previously had a body art permit or certification revoked, or is currently the subject of disciplinary proceedings related to body art chapter enforcement.

(m) The applicant shall show that it has demonstrated compliance with zoning and other local requirements regarding proper location and establishment of Body Art Studios, including any applicable building, fire safety, plumbing, mechanical and electrical codes.

(n) The Health Authority shall issue a Body Art Studio permit after:

1. Receipt of a completed application;

2. Payment of applicable fees;

3. Plan review approval; and

4. An inspection of the proposed studio which reveals that it is in compliance with requirements of this Chapter.

(o) Before being granted a permit, each Body Art Studio shall develop a written statement of policies and standard operating procedures that address:

1. Sterilization of instruments and equipment and Emergency Sterilization Procedures;

2. Body Artist and Employee Health;

3. Body Artist and Employee Drug and Alcohol Use;

4. Sanitizing areas and equipment between use;

5. Disposal of waste;

6. Record keeping;

7. Client screening;

8. Aftercare;

9. Exposure control plan;

10. Emergency plan for accidents that addresses first aid procedures; and

11. Water Interruption Plan.

(2) Body Art Studio Permit Holder Responsibilities. Upon acceptance of the permit issued by the Health Authority, in order to retain the permit, the permit holder shall:

(a) Ensure compliance with the provisions of this Chapter, including the conditions of any variance granted by the Department, and allow inspections by representatives of the Health Authority during hours of operation;

(b) Immediately discontinue operations and notify the Health Authority if an imminent health hazard may exist; and

(c) Replace existing facilities and equipment that do not comply with this Chapter if:

1. The Health Authority directs the replacement because the facilities and equipment constitute a public health hazard or no longer comply with the criteria upon which the facilities and equipment were accepted; or

2. The facilities and equipment require replacement due to wear and tear in the normal course of operation.

(3) A copy of the most current version of this Chapter must be in the studio at all times.

(4) Temporary Body Art Studio Permits.

(a) A temporary Body Art Studio permit may be issued for body art services provided outside of a permitted location for the purpose of product demonstration in connection with body art conventions or industry trade shows.

(b) A temporary Body Art Studio permit may be obtained after submitting an application that contains the name of the body artists, location, the operating days, hours of operation of the temporary studio, and the plans or description of the temporary studio. The applicant will provide information related to solid waste, biomedical waste, and sharps disposal.

(c) A temporary Body Art Studio permits will not be issued unless the applicant demonstrates to the Health Authority successful compliance with all the requirements of this Chapter. This includes education, disclosure, consent, minimum design standards, and furnishing and fixtures requirements.

(d) The application for a permit must be submitted for review by the Health Authority at least thirty days prior to the event and all applicable fees must be paid before a permit will be issued.

(e) The following criteria pertain to permits for temporary Body Art Studios:

1. No permit may be valid for more than seven consecutive days.

2. An applicant shall not receive more than two seven-day permits during a thirty-day period.

3. A permit shall not be transferable from one place to another, or from one person to another.

4. A permit shall be posted in a prominent and conspicuous place as determined by the Health Authority so clients can readily observe it.

5. The temporary Body Art Studios shall meet the requirements of this Chapter. In addition, the following will be required:

(i) A convenient handwashing facility must be located within 30 feet of each work or demonstration area for body artist handwashing. In the absence of a hand wash station meeting the requirements of this Chapter, this facility shall consist of, at least, a catch bucket, a pressurized or gravity fed, hands-free container filled with potable water, liquid antimicrobial hand soap, and individual paper towels at the service site.

(ii) Only single-use, disposable, pre-sterilized supplies may be used.

(5) Prohibited Facilities.

(a) Neither Body Art Studios nor body art procedures shall be allowed in a private residence or other structure used for human habitation, food services, retail sales not directly related to body art, grocery stores, convenience stores, or similar

purposes; however, body art operations may take place in completely separate areas of certain businesses deemed safe and appropriate by the Health Authority.

(b) Body Art Studios shall not be allowed in automobiles, mobile trailers, tents, recreational vehicles, or other non-fixed facilities.

(6) Prohibited Procedures and Restrictions.

(a) Implants, 3-D procedures, or other procedures involving insertion of foreign objects completely under the skin.

(b) Any body art procedure that results in the permanent removal of tissue or that requires medical equipment such as scalpels or dermal punches.

(c) The use of manipulating needles, sharps, or any other item to serve the purpose of a scalpel is prohibited.

(d) Scarification (branding, cutting, or skin peeling), suspension piercing, neck rings, foot binding, corseting, play piercing, and tooth gems/dental bonding are prohibited.

(e) In accordance with O.C.G.A. Section 16-5-71, no person under the age of eighteen shall be tattooed.

(f) It shall be unlawful for any person to pierce the body, with the exception of the ear lobes, of any person under the age of eighteen for the purposes of allowing the insertion of earrings, jewelry, or similar objects into the body, unless the body piercing is performed in the presence of the person's parent or legal guardian. The parent or legal guardian must have proper identification and sign a written consent form provided by the Body Art Studio. The consent form must indicate the methods and parts of the minor's body upon which the body piercing procedure is performed. Nipple and genital piercing are prohibited on minors regardless of parental or legal guardian consent.

(g) With the exception of microblading of the eyebrow, and in accordance with O.C.G.A. Section 16-12-5, it shall be unlawful for any person to perform tattooing or cosmetic micropigmentation procedures within any area within one inch of the nearest part of the eye socket. Such prohibited procedures include but are not limited to tattooing eyeliner.

(h) No person except a duly licensed physician or a Georgia licensed cosmetic laser practitioner as defined under Chapter 34 Title 43 shall remove or attempt to remove any tattoo.

(7) Body artists shall not be under the influence of alcohol or drugs that cause drowsiness or other impairment while performing body art procedures.

(8) Body Art Studios and body artists shall refuse services to any person who appears to be under the influence of alcohol or drugs.

(9) Live animals shall be excluded from within the studio and adjacent areas under the control of the permit holder. However, this exclusion does not apply to fish in clean, maintained aquariums which are maintained outside of an artist work area. Service animals accompanying disabled persons shall be permitted in the studio.

(10) The body artist must be free of any open wound that cannot be covered, any infection, or other visible or communicable diseases that can be transmitted as a result of carrying out the body art procedures

(11) A body artist shall not conduct any form of body art activity upon any area of a client that evidences the presence of any rash, lesion, or other visible signs of infection.

(12) Body art procedures not covered within these rules which have the potential for transmitting infectious disease must receive written departmental approval prior to being offered to clients.

(13) Body art shall only be performed by individuals holding a current Body Artist Certification issued by the Department, a Temporary Body Artist Permit or Guest Body Artist Permit issued by the Health Authority, and only at a location named in a Body Art Studio Permit or a Temporary Body Art Studio Permit.

Cite as Ga. Comp. R. & Regs. R. 511-3-8-.05
Authority: O.C.G.A. § 31-40-2.
History. Original Rule entitled "Management of Land Disposal Sites" adopted. F. Sep. 20, 2013; eff. Oct. 10, 2013.
Repealed: F. Jun. 20, 2014; eff. July 10, 2014.
Adopted: New Rule entitled "Permits." F. Mar. 8, 2023; eff. Apr. 6, 2023, as specified by the Agency.

Rule 511-3-8-.06. Employee Files.

(1) The permit owner of a Body Art Studio must maintain a file on all body artists who practice within the studio. Employee and body artist files must be kept on location for the duration of the person's employment and for a minimum of two years after the person is no longer employed. The employee and body artist files must be available for inspection and include the Department issued Body Artist Certification and a copy of the body artist's government issued ID.

(2) Any Body Artist working in an existing Body Art Studio on the effective date of this Chapter, as stated in Section 511-3-8-.03(4), shall have one year to obtain the Department certifications and education required in this Chapter. This timeframe may be extended for all applicants upon public notice by the Department on its website.

(3) The permit holder of the Body Art Studio shall make available, at no cost to the employee or body artist, the Hepatitis B vaccination series to body artists and any other employees who may have occupational exposure to blood or other potentially infectious material. For new employees and body artists, the vaccination must be offered after the worker is trained and within ten days of initial assignment to a job where there is potential occupational exposure, unless the employee has previously received the vaccine series, antibody testing has revealed that the worker is immune, the vaccine is contraindicated for medical reasons, or if the individual has declined the Hepatitis B vaccination series in writing. The employer must obtain a written opinion from the licensed healthcare professional within fifteen days of the completion of the evaluation for vaccination. This written opinion is limited to whether hepatitis B vaccination is indicated for the worker and if the worker has received the vaccination.

Cite as Ga. Comp. R. & Regs. R. 511-3-8-.06
Authority: O.C.G.A. § 31-40-5.
History. Original Rule entitled "Vector Reduction Management" adopted. F. Sep. 20, 2013; eff. Oct. 10, 2013.
Repealed: F. Jun. 20, 2014; eff. July 10, 2014.
Adopted: New Rule entitled "Employee Files." F. Mar. 8, 2023; eff. Apr. 6, 2023, as specified by the Agency.

Rule 511-3-8-.07. Body Artist Certification and Decertification.

(1) No person shall practice body art procedures without first obtaining a Body Artist Certification from the Department in accordance with the timeframes specified in these rules. Upon the effective date of this Chapter, as stated in Section 511-3-8-.03(4), existing Body Artists shall have one year to obtain and display a valid certificate issued by the Department. This deadline may be extended for all applicants upon public notice by the Department on its website.

(2) An applicant for a Body Artist Certification must be at least eighteen years of age and shall demonstrate to the Department successful compliance with all education, disclosure, consent, and fee requirements of this Chapter. An applicant shall request certification in one or more of the following areas:

(a) Tattooing;

(b) Piercing; and/or

(c) Microblading.

(3) Applicants shall submit a completed Department application provided by the Health Authority. The Department may authorize an electronic signature method for signing prescribed forms. As part of the application process, the applicant shall:

(a) Pay an exam fee not to exceed $50.00 to the Health Authority;

(b) Pay Department Certification fees; and

(c) Complete and pass a Department-approved exam on this Chapter.

(4) Initial application for the Body Artist Certification shall include:

(a) Name;

(b) Date of Birth;

(c) Residence address;

(d) Mailing address;

(e) Phone number;

(f) Photocopy of a government issued ID;

(g) Proof of United States Citizenship or lawful residence in the United States.

(h) Proof of successful completion of an OSHA-compliant Bloodborne Pathogen/Universal Precautions training program and Basic First Aid/CPR classes given or approved by the Department; and

(i) Valid documentation of a Hepatitis B Virus (HBV) vaccination status including:

1. Documentation of HBV vaccination; or

2. Laboratory evidence of immunity or documentation of no response following two full HBV vaccine series; or

3. Documentation stating the vaccine is contraindicated for medical reasons. Contraindications require a dated and signed licensed health care professional's statement specifying the name of the Body Artist applicant or employee and that the vaccine cannot be given; or a

4. Signed certificate of vaccination declination of HBV as required by OSHA.

(5) No Body Artist Certification will be issued without successfully completing an approved course in Bloodborne Pathogens/Universal Precautions and a Basic First Aid/CPR course approved by the Department.

(6) The Body Artist Certification shall be valid for one year and may be renewed on a standard date to be determined by the Department. Issuance and renewal shall be conditioned on compliance with this Chapter, successful completion of required courses, and paying required certification fees to the Department. Certifications shall be issued on forms provided by the Department.

(7) A body artist shall only perform that form of body art which is indicated in the Body Artist Certification.

(8) A copy of the Body Artist Certification shall be posted where it may be readily observed by clients.

(9) For annual Body Artist Certification Renewal, each artist:

(a) Must submit a completed Body Artist Certification Renewal Application;

(b) Must pay all applicable fees to the Department;

(c) Must submit proof of current immunizations and education requirements as referenced in the initial certification section; and

(d) Must not have any unresolved disciplinary actions or have committed any illegal activities related to the industry during the previous certification period.

(10) Temporary Body Artist Permit.

(a) No body artist shall practice body art at a Temporary Studio without a Temporary Body Artist Permit issued by the Health Authority or Body Artist Certification issued by the Department.

(b) The Health Authority may issue a seven-day permit to engage in the practice of body art if the body artist is not currently certified by the Department. Such temporary body artist permit will allow a person to practice body art only in a permitted Temporary Studio under the supervision of the permit holder. Temporary Body Artist Permits will not be issued unless the applicant demonstrates to the Health Authority successful compliance with all education, disclosure, consent, and requirements of this Chapter. The issuance of a Temporary Body Artist Permit is conditioned upon the following:

1. A completed application submitted no less than ten days in advance of the start date of providing services; the Health Authority may authorize an electronic signature method for signing prescribed forms.

2. Documentation that the applicant has received education requirements set by this Chapter;

3. Must be listed on the temporary Body Art Studio permit application where the applicant will perform body art;

4. Payment of all applicable fees as determined by the Health Authority; and

5. Documentation of a Hepatitis B Virus (HBV) vaccination completion status including:

(i) Documentation of HBV vaccination;

(ii) Laboratory evidence of immunity or documentation of no response following two full HBV vaccine series;

(iii) Documentation stating the vaccine is contraindicated for medical reasons, including a dated and signed licensed health care professional's statement specifying the name of the Body Artist applicant or employee and that the vaccine cannot be given; or

(iv) Signed certificate of vaccination declination of HBV as required by OSHA.

(11) Guest Body Artist Permit.

(a) No visiting out-of-state body artist shall practice body art without a Guest Body Artist Permit issued by the Health Authority.

(b) The Health Authority may issue a seven-day permit to engage in the practice of body art. Such guest body artist permit will allow a person to practice body art under the direct supervision of a body artist holding a valid Department issued certification in the same category. The issuance of a Guest Body Artist Permit is conditioned upon the following:

1. A completed application submitted no less than ten days in advance of the start date of providing services; the Health Authority may authorize an electronic signature method for signing prescribed forms.

2. Documentation that the applicant has received education specified in by this Chapter;

3. A letter of consent signed by a body artist certified by the Department, a copy of the Body Artist Certification of the sponsoring artist, and a copy of the Body Art Studio permit where the applicant will perform body art;

4. Payment of all applicable fees as determined by the Health Authority; and

5. Documentation of a Hepatitis B Virus (HBV) vaccination completion status including:

(i) Documentation of HBV vaccination;

(ii) Laboratory evidence of immunity or documentation of no response following two full HBV vaccine series;

(iii) Documentation stating the vaccine is contraindicated for medical reasons, including a dated and signed licensed health care professional's statement specifying the name of the Body Artist applicant or employee and that the vaccine cannot be given; or

(iv) Signed certificate of vaccination declination of HBV as required by OSHA.

(c) An applicant shall not receive more than two seven-day Guest Body Artist Permits during a thirty-day period.

(12) Decertification and Denial.

(a) The Department may deny or revoke the certification of any person for one or more of the following reasons:

1. Failure to comply with this Chapter;

2. A material misrepresentation or omission on any application for certification or renewal;

3. Failure to pay certification or renewal fees;

4. A civil judgement based on conduct related to the Body Art industry; or

5. Such other conduct, as in the opinion of the Department, would render certification of the person a threat to the health or safety of the public.

(b) The Department may, in its discretion, impose a lesser sanction where the circumstances of the violation do not merit revocation of the certification, including suspension or probation on specific terms.

(c) Disciplinary Procedure.

1. The Department may, but is not required to, refer information concerning a certified person to the Body Art Advisory Committee, if established. The Committee shall review the evidence and make a recommendation to the Department.

2. The Department shall give written notice of any disciplinary action taken pursuant to this regulation by certified mail or statutory overnight delivery to the last known address of the person or entity. The notice shall set forth the facts which support disciplinary action.

3. Upon request made in writing and received by the DPH Office of General Counsel no later than twenty days after the written notice of disciplinary action is mailed, the Department shall refer the matter to the Georgia Office of Administrative Hearings for hearing in accordance with its rules. The burden of proof shall be on the person or entity seeking the hearing.

4. Effective date of disciplinary action.

   (i) All disciplinary actions by the Department are effective twenty days after the certified person's receipt of the notice, unless otherwise specified in the notice, or unless the certified person makes a timely request for a hearing.

   (ii) Upon a written finding set forth in the notice of disciplinary action that the public safety, health, and welfare imperatively require emergency action, the suspension of the certification shall be effective immediately upon issuance of the notice.

5. Upon request for exculpatory, favorable, or arguably favorable information relative to pending allegations involving disciplinary action, the Department shall either furnish such information, indicate that no such information exists, or provide such information to the hearing officer for *in camera* inspection pursuant to O.C.G.A. § 50-13-18(d)(2).

Cite as Ga. Comp. R. & Regs. R. 511-3-8-.07
Authority: O.C.G.A. §§ 31-40-2, 31-40-3, 31-40-4, 50-13-13, 50-13-18.
History. Original Rule entitled "Pathogen Control Management" adopted. F. Sep. 20, 2013; eff. Oct. 10, 2013.
Repealed: F. Jun. 20, 2014; eff. July 10, 2014.
Adopted: New Rule entitled "Body Artist Certification and Decertification." F. Mar. 8, 2023; eff. Apr. 6, 2023, as specified by the Agency.

Rule 511-3-8-.08. Client Files.

(1) Every Body Art Studio shall require that each client complete an application, client evaluation and informed consent form approved by the Health Authority prior to having any body art activity performed upon or to their body. All records required by this Rule may be kept in digital or print form.

(2) The application shall contain a minimum of the following:

   (a) Name;

   (b) Date of birth;

(c) Copy of government issued identification (ID);

(d) In the case of piercings for a minor client, the parent or legal guardian's government issued ID, proof of parentage or legal guardianship through a certified copy of a birth certificate or court order of guardianship respectively, state-issued photo ID or other Health Authority approved ID for the minor client, and the written consent to conduct the contemplated Body Art activity to be performed upon the minor client;

(e) A brief description and location of the Body Art procedure to be performed;

(f) The phone number of the Health Authority and instructions for the client, or in the case of a minor client, the minor client and parent or legal guardian, to contact the Health Authority with any complaint, question or concern regarding safety, sanitization, or sterilization procedures;

(g) The name and certification number of the Body Artist who is to conduct the Body Art on the client or minor client;

(h) Signature of the client or, in the case of a minor client, the signature of the client's parent or legal guardian signed in the presence of the Body Artist;

(i) A statement by the client attesting that he or she is not under the influence of alcohol or drugs;

(j) The signature of the Body Artist; and

(k) The dates of all signatures.

(3) The Body Art Studio shall complete a client evaluation to ensure that the client inform the Body Artist of any known chronic medical or communicable conditions, including, but not limited to the following:

(a) History of diabetes or any disorder or medication that affects the neurological or immune system in fighting infection;

(b) Bloodborne conditions such as Hepatitis B, Hepatitis C, HIV;

(c) History of hemophilia or any other blood clotting abnormalities;

(d) History of skin disease, skin lesions, or skin sensitivities to soap, disinfectants, etc.;

(e) History of allergies or adverse reactions to pigments, dyes, or other skin sensitivities;

(f) History of epilepsy, seizures, fainting or narcolepsy;

(g) The taking of medications such as aspirin or other anticoagulants (such as warfarin, XareltoT, Plavix, EliquisT, etc.) which thin the blood and or interfere with blood clotting;

(h) History of or suspicion of adverse reaction to latex or products containing latex; and

(i) History of keloid formation.

(j) If the client is pregnant or has been pregnant in the last three (3) months; and,

(k) If the client has eaten in the last four (4) hours.

(4) The body artist must tell the client to consult a physician prior to the procedure if they have any concerns related to the evaluation questions outlined in (3).

(5) The Body Artist shall inform the client, verbally and in writing that the health conditions outlined in (3) may increase health risks associated with receiving a body art procedure.

(6) If the client refuses to disclose the information in (3) of this subsection, then the Body Artist shall require the client to sign a form stating that the client was asked to provide the information and refused.

(7) The client must sign an informed consent form that includes but not limited to the following:

(a) Client is voluntarily obtaining services of their own free will and volition;

(b) Client has had the opportunity to read and understand the documents presented to them;

(c) Client has the ability to ask questions about the procedure; and

(d) Client has received and understands written and verbal aftercare.

(8) For each client, proper records of identification, an application, client evaluation, and informed consent form shall be kept, in digital or print form, and retained for a minimum of three years. Records must be kept on premises for a minimum of one year. All three years of records must be available to the Department or Health Authority upon request. The files must be stored in a manner that prohibits access from unauthorized personnel.

Cite as Ga. Comp. R. & Regs. R. 511-3-8-.08
Authority: O.C.G.A. § 31-40-5.
History. Original Rule entitled "Application Rate" adopted. F. Sep. 20, 2013; eff. Oct. 10, 2013.
Repealed: F. Jun. 20, 2014; eff. July 10, 2014.
Adopted: New Rule entitled "Client Files." F. Mar. 8, 2023; eff. Apr. 6, 2023, as specified by the Agency.

Rule 511-3-8-.09. Minimum Design Standards.

(1) A studio shall provide work areas separate from observers or visitors. An individual body artist shall not perform body art procedures simultaneously on different clients.

(2) There shall be adequate floor space for each work area in the studio. At a minimum, an adequate area includes space for all items required by this Chapter, such as a handwashing sink, a waste receptacle, and a sharps container, as well as space for the Body Artist to safely perform body art procedures.

(a) Work areas must be separated from lobby and waiting areas by nonabsorbent curtains, knee walls, or other partitions approved by the Health Authority.

(b) Floors shall be nonabsorbent and easily cleanable.

(c) Work areas shall provide privacy, if desired by the client, by means of nonabsorbent curtains or similar approved partitions.

(d) If body art procedures are conducted in an environment where airborne particulates are of concern (including but not limited to hair and nail salons), the body art procedures shall take place behind a floor-to-ceiling partition or in a separate room.

(3) A Body Art Studio shall have a cleaning room to be used exclusively for the cleaning, disinfection, and sterilization of instruments.

(a) The cleaning room shall have a separate stainless-steel instrument sink reserved only for instrument disinfection activities and shall be equipped with hot and cold running water. Sink shall have smooth welds and joints, be free of breaks and open seams, and be easily cleanable.

(b) The cleaning room shall be separated from any other area in the studio by means of doors, nonabsorbent curtains, or similar approved partition extending from floor to ceiling or a height of at least eight feet and must be labeled to prevent clients from entering the room.

(c) The cleaning room shall be equipped with an ultrasonic cleaning unit and a Class B or S medical grade autoclave or another approved autoclave. The autoclave shall be used to sterilize all non-disposable and reusable body art equipment.

(d) The instrument sink, ultrasonic cleaning unit, and autoclave shall each be separated by a minimum distance of forty-eight inches unless using a splashguard approved by the Health Authority.

(e) The cleaning room walls, floors, doors, windows, skylight, and other components shall be constructed of smooth, nonabsorbent, durable material and be maintained in good repair.

(f) The requirement for a cleaning room with an ultrasonic cleaning unit and autoclave may be waived by the Health Authority if the studio only stores and uses commercially purchased sterile single-use disposable body art tattoo instruments.

(4) Hand washing facilities shall be provided within 30 feet of each workstation and must be fully accessible in an unobstructed pathway. Additional hand sinks may be placed at the discretion of the Health Authority if warranted. Hand washing facilities will also be made available in the cleaning rooms. These are in addition to the required sinks in toilet rooms. Studios that are open and operating on the effective date of this Chapter will be required to have one hand wash sink that is available by an unobstructed pathway within thirty feet of each work area not to include any hand wash sinks in toilet rooms.

(5) Hand washing sinks and instrument sinks shall be used for those intended purposes only.

(6) At least one service sink or one curbed cleaning facility equipped with a floor drain shall be provided and conveniently located for the cleaning of mops or similar wet floor cleaning tools and trash cans and for the disposal of service water and similar liquid waste. After the effective date of this Chapter, mop sinks will be required upon renovation to any existing studio or any major plumbing renovation.

(7) The use of common towels and cloths for any purpose is prohibited.

(8) Sanitary Facilities and Controls.

(a) Enough potable water for the needs of the Body Art Studio shall be provided from a public water system, or from an approved nonpublic water system that is constructed, maintained, and operated according to applicable state or local codes as amended.

(b) Non-Public Water Supply - Approved Wells.

1. Water from a non-public water system shall follow guidelines established in the Georgia Department of Natural Resources, Environmental Protection Division (EPD) Memorandum of Understanding for Non-Public Water Supplies.

2. Sampling Report. The most recent sample report for the non-public water system shall be retained on file in the Body Art Studio and results must be forwarded to the Health Authority.

(c) Sewage. All sewage, including liquid water, shall be disposed of by a public sewage system or by an approved on-site sewage disposal system.

(d) Plumbing. Plumbing shall be sized, installed, and maintained according to law, state and local code. There shall be no cross-connection between the potable water supply and any other water supply or other possible source of contamination.

(9) Toilet Facilities.

(a) There shall be a minimum of one restroom containing a toilet and a handwash facility readily accessible to any Body Artist or client that does not require passage through a cleaning room and work area with the exception that access through such areas may be allowed if the risk of contamination is determined to be minimal.

(b) Toilet rooms. Toilet rooms opening directly into work or client waiting areas shall be completely enclosed and shall have tight-fitting, solid self-closing doors, which shall be closed except during cleaning or maintenance.

(c) All toilet rooms shall have sufficient mechanical ventilation to keep them free of excessive heat, steam, condensation, vapors, obnoxious odors, smoke, and fumes.

(d) Toilet fixtures. Toilet fixtures shall be kept clean and in good repair. A supply of toilet tissue shall always be provided at each toilet. Easily cleanable receptacles with trash liners shall be provided for waste materials. Toilet rooms shall have at least one covered waste receptacle.

(10) Handwash Facilities.

(a) Handwash facilities shall be designed, installed, and maintained according to law, state and local code.

(b) Each handwashing sink shall be equipped to provide hot water at a temperature of at least 100ºF (38 ºC). Hot and cold water shall be tempered by means of a mixing valve or combination faucet. Any self-closing, slow-closing, or metering faucet used shall be designed to provide a flow of water for at least twenty seconds without the need to reactivate the faucet.

(c) A soap dispenser and a supply of antiseptic, hand-cleaning soap or detergent shall be available at each handwash facility. A fully covered or enclosed towel dispenser with a supply of single use sanitary towels shall be conveniently located near each handwash facility. Easily cleanable waste receptacles with self-closing lids with hands-free controls shall be conveniently located near the hand washing facilities.

(d) Sinks, soap dispensers, paper towel dispensers, and all related fixtures shall be kept clean, in good repair, and supplied at all times.

(11) Solid Waste.

(a) Non-Biomedical Waste Containers.

1. Garbage and refuse shall be kept in durable, easily cleaned containers that do not leak and do not absorb liquids.

2. All outside refuse containers shall be covered and maintained.

3. Containers used in work areas shall be kept covered when not in use. At least one waste receptacle shall be provided in each artist area. Receptacles in the body artist area shall be emptied daily or more if necessary. Solid waste shall be removed from the premises at least weekly or more if necessary.

4. There shall be a sufficient number of containers to hold all the garbage and refuse that may accumulate.

(b) Garbage and refuse shall be disposed of at such frequency to prevent the development of odor and the attraction of insects, rodents, or vermin.

(c) Biomedical Waste Containment.

1. Disposal of infectious waste such as blood, fluids, used inks, or other liquid waste may be deposited directly into a drain connected to an approved sewer system or on-site sewage system via a sink dedicated to that purpose.

2. Containment of biomedical waste shall be in a manner and location which affords protection from animals, rain, and wind, does not provide a breeding place or a food source for insects and rodents, and minimizes exposure to the public.

3. Biomedical waste shall be segregated by separate containment from other waste at the point of origin.

4. Biomedical waste, except for sharps, shall be placed in containers which are impervious to moisture and have strength sufficient to preclude ripping, tearing, or bursting under normal conditions of use. The containers shall be securely closed so as to prevent leakage or expulsion of solid or liquid wastes during storage, handling, or transport.

5. Sharps shall be contained for storage, transportation, treatment, and subsequent disposal in leak-proof, rigid, puncture-resistant containers which are taped closed or tightly lidded to preclude loss of contents.

   (i) Rigid containers of discarded sharps and all other disposable containers used for containment of biomedical waste shall be red or orange in color and clearly identified with the universal biohazard symbol or clearly marked with the word "Biohazard."

(ii) Biomedical waste contained in disposable containers as prescribed above shall be placed for storage, handling, or transport in disposable or reusable pails, cartons, boxes, drums, or portable bins. The containment system shall have a tight-fitting cover and be kept clean and in good repair. The containers may be of any color and shall be conspicuously labeled with the universal biohazard symbol and the word "Biohazard" on the sides so as to be readily visible from any lateral direction when the container is upright.

(iii) Reusable containers used for shipment of biomedical waste shall be thoroughly washed and decontaminated each time they are emptied. Reusable pails, drums, dumpsters, or bins used for containment of biomedical waste shall not be used for other purposes.

(iv) Sharps container must be placed within arm's reach and below eye level at their point of use.

(12) Physical Facilities, Floors, Walls, Ceilings, and Attached Equipment: Floors, walls, ceilings, and attached equipment and decorative materials shall be kept clean and maintained in good repair.

(a) Floors.

1. Floors and floor coverings of all work areas, dressing rooms, locker rooms, toilet rooms and vestibules shall be constructed of smooth, nonabsorbent, hard durable material and maintained in good repair.

2. The floor and cove base/joint shall be properly sealed.

3. Carpeting is allowed in the lobby area only and shall be of closely woven construction, properly installed, easily cleanable, and maintained in good repair.

(b) Walls and Ceilings.

1. Maintenance. Walls and ceilings, including doors, windows, skylight, and similar closures shall be constructed of durable, easily cleanable material and be maintained clean and in good repair.

2. Attachments. Light fixtures, vent covers, wall-mounted fans, and similar equipment attached to walls and ceilings shall be easily cleanable and maintained in good repair.

(13) Lighting.

(a) Permanently fixed artificial light sources shall be installed to provide at least fifty- foot candles of light on all work area surfaces and at equipment washing work levels.

(b) Permanently fixed artificial light sources shall be installed to provide at a distance of thirty inches from the floor at least ten-foot candles of light in all other areas.

(14) Ventilation. All rooms shall have sufficient ventilation to keep them free of excessive heat, steam, condensation, vapors, obnoxious odors, smoke, and fumes.

(15) Poisonous or Toxic Materials.

(a) Materials permitted. There shall be present in the Body Art Studio only those poisonous or toxic materials necessary for maintaining the studio and cleaning or sanitizing equipment, as well as controlling insects and rodents.

(b) Labeling of materials. Containers of poisonous or toxic materials shall be prominently and distinctly labeled according to law for easy identification of contents and approved for intended use.

(c) Toxic items shall be separated from other materials used in body art procedures by way of a closed cabinet or separate room.

(d) Spray bottles labeled with contents may be used for the purpose of cleaning but not for body art procedure preparation.

(16) Premises.

(a) Body Art Studios shall be kept neat, clean, and free of litter and rubbish.

(b) Only articles necessary for the operation and maintenance of the Body Art Studio shall be stored on or within the studio. Lockers or other designated area will be provided for such personal items as purses, jackets, medications, etc.

(c) Aisles and working spaces. Aisles and working spaces between units of equipment and walls shall be unobstructed and of sufficient width to permit body artists and employees to perform their duties readily without contamination of equipment or operational surfaces by clothing or personal contact.

(d) The premises shall be kept in such condition as to prevent the entrance, harborage, or feeding of insects, rodents, or vermin.

(17) Equipment and Instruments.

(a) Materials.

1. Multi-use equipment and instruments shall be constructed and repaired with safe materials, including finishing materials; they shall be corrosion-resistant and nonabsorbent; and they shall be smooth, easily cleanable, and durable under conditions of normal use. Single-service articles shall be made from clean, sanitary, and safe materials.

2. Re-use of single-service articles is prohibited.

(b) Design and Fabrication.

1. General. All equipment and instruments, including plastic ware, shall be designed, and fabricated for durability under conditions of normal use and shall be resistant to denting, buckling, pitting, and chipping.

   (i) Body art operational surfaces shall be easily cleanable, smooth, and free of breaks, open seams, cracks, chips, pits, and similar imperfections, as well as free of difficult to clean internal corners and crevices.

   (ii) Sinks and drain boards shall be self-draining.

2. Operational surfaces. Surfaces of equipment not intended as operational surfaces, but which are exposed to splash or debris or which otherwise require frequent cleaning, shall be designed, and fabricated to be smooth, washable, free of unnecessary ledges, projections, or crevices and readily accessible for cleaning. Such surfaces shall be of material and in such repair as to be easily maintained in a clean and sanitary condition.

3. Needles, needle assembly with bar, dyes, or pigments shall be designed and manufactured for the sole purpose of body art.

Cite as Ga. Comp. R. & Regs. R. 511-3-8-.09
Authority: O.C.G.A. § 31-40-5.
History. Original Rule entitled "Septage Holding Facilities" adopted. F. Sep. 20, 2013; eff. Oct. 10, 2013.
Repealed: F. Jun. 20, 2014; eff. July 10, 2014
Adopted: New Rule entitled "Minimum Design Standards." F. Mar. 8, 2023; eff. Apr. 6, 2023, as specified by the Agency.

Rule 511-3-8-.10. Furnishings and Fixtures.

(1) Furnishings of the Body Art Studio shall be maintained in good condition, intact, and functional. Furnishings should be made of or covered in a material that is easily cleanable and non-absorbent.

(2) All surfaces in the work area that could potentially be contaminated during a procedure must be non-porous to allow for proper cleaning. This includes but is not limited to worktables, chair mats and bases, shelving, and counters.

(3) Worktables and chairs shall be provided for each body artist workstation.

(a) All exposed surfaces of all worktables and chairs shall be constructed of material which is smooth, nonabsorbent, corrosive resistant, and easily sanitized.

(b) All exposed surfaces of worktables and chairs shall be sanitized with an EPA registered disinfectant approved by the Health Authority after each use and between clients.

Cite as Ga. Comp. R. & Regs. R. 511-3-8-.10
Authority: O.C.G.A. § 31-40-5.
History. Original Rule entitled "Record Keeping" adopted. F. Sep. 20, 2013; eff. Oct. 10, 2013.
Repealed: F. Jun. 20, 2014; eff. July 10, 2014.
Adopted: New Rule entitled "Furnishings and Fixtures." F. Mar. 8, 2023; eff. Apr. 6, 2023, as specified by the Agency.

Rule 511-3-8-.11. Supplies.

(1) Bulk single-use articles shall be commercially packaged and handled to protect them from contamination. These articles shall be stored in an area separate from the work area and toilet facilities.

(2) All materials intended for single-use application to the human skin shall be from single-use containers and shall be disposed of after each use.

(3) Cabinets and closed, sealable containers for the storage of instruments, pigments, single use articles such as gloves, ink caps, carbon, or stencils, shall be provided for each body artist and shall be maintained in a sanitary manner which protects them from contamination.

(4) Minimum supplies of a studio. Each workstation is to be equipped or stocked with enough of the following items:

(a) Body Tattooing Studios shall have packaged, single use, pre-sterilized needle assembly with bar and sterilized needle tubes;

(b) Body Piercing Studios shall have packaged, single-use, pre-sterilized needles, sterilized needle tubes, sterilized forceps, and sterilized hemostats; single-use pens or equivalent instruments. Piercing Studios may sterilize equipment at point of use if they have a cassette autoclave.

(c) Extra packages of disposable towels other than the package that is being used;

(d) Extra boxes of medical grade disposable gloves other than the box being used; and

(e) An extra supply of bandages, ointment or gel, and antimicrobial soap.

Cite as Ga. Comp. R. & Regs. R. 511-3-8-.11
Authority: O.C.G.A. § 31-40-5.
History. Original Rule entitled "Supplies" adopted. F. Mar. 8, 2023; eff. Apr. 6, 2023, as specified by the Agency.

Rule 511-3-8-.12. Health and Hygiene.

(1) With the exception of a plain ring such as a wedding band, jewelry on the hands and wrists of a body artist, such as watches, rings, or bracelets, shall be removed prior to the start of the body art procedure.

(2) Prior to the procedure, the artist shall inspect their hands for hangnails, small cuts, sores, and abrasions. If a cut, sore, or abrasion is detected, a bandage shall be applied for added protection before gloving. The artist shall trim fingernails to ensure gloves are not punctured. Recent tattoos or piercings in the healing process shall also be properly covered to prevent any bodily fluid transfer.

(3) Use aseptic technique. Thorough hand washing is essential after client contact, after handling blood and body fluids, after wearing gloves, and prior to exiting the work area.

(4) The artist must thoroughly wash their hands in hot, running water with soap, then rinse hands and dry with disposable paper towels before and after performing body art procedures; anytime there is an interruption in body art procedure that requires the artist to remove and replace gloves; after using the restroom; and after touching their face, hair or other areas.

(5) Medical grade, single-use, disposable gloves labeled for surgical, or examination purposes shall be worn when coming in contact with the client and during the body art procedure. Gloves shall be changed and properly disposed of each time there is an interruption in the body art procedure, the gloves become torn or punctured, or whenever their ability to function is compromised. Under no circumstances shall a single pair of gloves be used on more than one individual. Vinyl gloves are not allowed.

(6) A body artist shall maintain the highest degree of personal cleanliness, conform to standard hygienic practices, and wear clean clothes when performing body art procedures. Single-use aprons, smocks, or sleeve covers are acceptable. Open-toed shoes or shoes with holes shall not be permissible.

(7) The skin of the artist shall be free of rash, open lesions, or infection. No artist affected with boils, infected or open wounds or sores, abrasions, weeping dermatological lesions, fever, vomiting, diarrhea, or acute or chronic cough or respiratory infection shall work in

any area of a Body Art Studio in any capacity in which there is a likelihood that the individual could contaminate body art equipment, supplies, working surfaces with body substances or pathogenic organisms or expose other staff or clients to infections.

(8) Universal precautions shall be observed to prevent contact with blood or other potentially infectious materials. All body artists and employees shall be trained in universal precautions and present documentation of yearly training upon request.

(a) The body artist should assume that all human blood, plasma, serum, body fluids and tissues are contaminated with Human Immunodeficiency Virus (HIV) and/or Hepatitis viruses (e.g., HBV, HCV).

(b) The most susceptible route of occupational infection for HIV, HBV, and HCV is by accidental needle sticks, but may include contamination of the mucous membranes, or through broken, abraded, or irritated skin. Use appropriate caution and maximum protection to prevent such contact.

(c) Proper decontamination procedures, emergency biohazard spill management, and proper use of biosafety equipment shall be utilized.

(d) Use aseptic technique. Thorough hand washing is essential after client contact, after handling blood and body fluids, after wearing gloves, and prior to exiting the work area.

(e) Infectious material spills shall be cleaned using an EPA registered disinfectant and following universal precautions.

(f) Clean all work areas and equipment used in handling human biohazardous materials with an EPA-registered disinfectant when concluding work to protect personnel from accidental infection.

(g) Eating, drinking, use of tobacco products, and applying cosmetics or lip balm are not permitted in the area where body art preparations or procedures are performed and any location where instruments or supplies are stored or cleaned. Exceptions may be made for the purpose of rendering first-aid.

(h) All procedures shall be performed carefully to minimize the creation of aerosols.

(i) Employees and body artists shall report all work-related accidents, incidents, and unexplained illness to their supervisor immediately.

(j) Soiled gloves shall be removed in a manner to minimize the risk of self-contamination or cross-contamination after each operation and prior to contacting work surfaces, doorknobs, wall switches, or telephones. Dispose of used gloves in a bagged trash container.

(k) Food storage cabinets or refrigerators shall be located outside the work area.

Cite as Ga. Comp. R. & Regs. R. 511-3-8-.12
Authority: O.C.G.A. § 31-40-5.
History. Original Rule entitled "Health and Hygiene" adopted. F. Mar. 8, 2023; eff. Apr. 6, 2023, as specified by the Agency.

Rule 511-3-8-.13. Instrument Cleaning and Sterilization.

(1) An ultrasonic cleaning unit and operational Class B or S medical grade or other approved medical-grade autoclave is required and shall be provided in each Body Art Studio unless the use of pre-sterilized items and equipment or single-use items has been approved by the Health Authority.

(2) Ultrasonic cleaning units used for cleaning instruments shall be clearly labeled "biohazardous" and shall be operated in accordance with the manufacturer's recommendation.

(3) The ultrasonic cleaning unit and medical-grade autoclave shall be used and maintained according to manufacturer's specifications. Each ultrasonic cleaning unit and medical-grade autoclave shall be emptied and thoroughly cleaned and disinfected as per manufacturer's recommendations. Ultrasonic cleaning unit and medical-grade autoclave maintenance records must be maintained for two years and be made available upon request.

(4) Used non-disposable instruments shall be kept in a separate puncture-resistant container and soaked in a protein-dissolving detergent-enzyme cleaner until cleaned. The solution shall be changed as recommended by the solution manufacturer. The cleaning method shall include the following:

(a) Employees and body artists shall use personal protective equipment, protecting their eyes, nose, mouth, and hands while cleaning instruments and follow manufacturer's safety precautions for any chemicals used. Instruments shall be completely disassembled and pre-scrubbed prior to being placed into an ultrasonic cleaning unit. The ultrasonic unit must be sealed and covered when in use to protect from aerosolization.

(b) After removal from the ultrasonic cleaning unit, rinsed in clean water and air dried.

(c) Prior to being placed in the autoclave, all equipment shall be bagged, labeled as to its contents, initialed, dated and sealed. If multiple autoclaves are in use, the autoclave used must be designated on the packaging.

(d) Instruments shall be packed individually in sterilization packs and sterilized in a medical-grade autoclave. All sterilized packs shall contain either a sterilization indicator or internal temperature indicator and marked with the date of

sterilization. Sterilized instruments may be stored for use up to one year, as long as the integrity of the packaging has not been compromised.

(e) Each autoclave bag must be used in accordance with the manufacturer's recommendations and may hold no more than one individual item. A piercing set may be bagged together.

(5) After sterilization, the packaged instruments shall be stored in a clean dry cabinet or other tightly covered container reserved and labeled for storage of sterile instruments.

(6) If a sterilized package has been breached or allowed to get wet, the instruments must be re-packaged and sterilized again before use.

(7) A log of sterilization procedures shall be maintained near the sterilizing equipment. Included in the log, shall be type of load, quantity of load, temperature, pressure, and length of sterilizing time.

(8) Spore tests shall be used at a minimum frequency of every 40 hours of operation of the autoclave but not less than on a monthly basis unless the manufacturer specifies more frequent monitoring. Records of the results must be kept for a minimum of three years. An independent commercial testing laboratory contracted by the permit owner or body artist, or both shall perform biological spore testing of the autoclave. A provision shall be included in the contract with the commercial testing laboratory requiring the body art studio to notify the Health Authority of any failure of the autoclave to eradicate all living organisms, including spores.

(9) Upon notification of a positive microbiological monitoring report, the autoclave shall be immediately checked for proper use and function and the permit owner shall cease use of the autoclave immediately upon receipt of the positive report. Any items remaining bagged after sterilization must be reprocessed and sterilized by a medical-grade autoclave approved for use prior to return to service. A negative biological test and passing a Class 5 integrating indicator must be achieved before the autoclave can be used again and the studio is reopened. The studio shall have the option to obtain a properly functioning sterilizer with a negative biological report in order to remain open or if the studio has more than one autoclave in operation, they may be given approval to remain open. The Body Art Studio's standard operation procedure should include an emergency plan should an autoclave failure or malfunction occur.

(10) Any item or instrument used for body art that is contaminated during the procedure shall be discarded and replaced immediately with a new disposable item or a new sterilized instrument or item before the procedure resumes.

Cite as Ga. Comp. R. & Regs. R. 511-3-8-.13
Authority: O.C.G.A. § 31-40-5.
History. Original Rule entitled "Instrument Cleaning and Sterilization" adopted. F. Mar. 8, 2023; eff. Apr. 6, 2023,

as specified by the Agency.

Rule 511-3-8-.14. Dyes and Pigments.

(1) All dyes or pigments used in tattooing shall be from commercial professional suppliers specifically manufactured as dyes or pigments only for the tattooing of human skin, and shall be used according to the manufacturer's instructions. Products banned or restricted by the Food and Drug Administration are prohibited.

(2) All ink shall be handled using the following protocol:

(a) Bulk containers of ink shall not be used for longer than the manufacturer's expiration date.

(b) Inks and pigments can be stored in workstations or in an approved location and must be properly stored to prevent contamination.

(c) Containers of ink may only be handled while wearing clean medical grade gloves.

(d) The tops of containers of ink must be disinfected prior to dispensing. After dispensing, the containers must be disinfected and immediately returned to their approved storage location before any tattoo procedures begin.

(e) All ink must be dispensed into approved single use containers.

(3) In preparing or mixing of dyes or pigments, only nontoxic materials shall be used. Dyes or pigments shall be mixed and placed in individual single-use containers.

(4) After tattooing, the remaining unused dye or pigment in the single-use container shall be properly discarded along with the container.

(5) The Safety Data Sheets of all inks must be available for client review to assess any possible allergic reaction to ingredients.

(6) Dyes and pigments shall be mixed only with distilled or sterile water.

Cite as Ga. Comp. R. & Regs. R. 511-3-8-.14
Authority: O.C.G.A. § 31-40-5.
History. Original Rule entitled "Dyes and Pigments" adopted. F. Mar. 8, 2023; eff. Apr. 6, 2023, as specified by the Agency.

Rule 511-3-8-.15. Tattoo Procedures.

(1) Medical grade disposable gloves shall be worn during the preparation of equipment for a tattoo procedure and during the procedure. Vinyl gloves are not permissible.

(2) Before the procedure begins, all instruments to be used during the tattooing must be placed on a medical grade absorbent liner which must be placed on a disinfected surface.

(3) Only a commercially packaged, single-use, pre-sterilized needle assembly with bar shall be used and disposed of immediately after use into a puncture-resistant, or disposable biohazard container. Expired, breached needle packages or needle packages that have become wet may not be re-sterilized and must be discarded.

(4) Sterilized instruments shall remain in sterile packages until opened in front of the client.

(5) Any part of a tattooing machine that may be touched by the artist during the procedure shall be covered with a disposable plastic sheath that is discarded after each procedure and the machine shall be disinfected.

(6) A clip cord sleeve and barrier film shall be used over exposed electrical cords or other approved cleaning and disinfection methods demonstrated to prevent contamination.

(7) All devices used to apply pigments must be designed and used to prevent backflow of pigments into the machine. Needle cartridges must have a membrane.

(8) Single-use towels or gauze shall be used in preparing the site to be tattooed and shall be disposed of after use on each client.

(9) If shaving is necessary, single-use disposable razors shall be used and discarded into a puncture-resistant container between clients and as otherwise needed.

(10) After shaving the area to be tattooed, or if the area does not need to be shaved, the site of the tattoo shall be thoroughly cleaned with an antimicrobial solution used in accordance with the manufacturer's label instructions.

(11) When a workstation rinse cup is used alone, the cup and solution shall be disposable and discarded after each client.

(12) If squirt bottles are used to dispense liquids, the liquid shall be applied onto a single use wipe rather than directly onto the client.

(13) Single-use ointment tubes, applicators, and supplies shall be discarded after each tattoo application.

(14) When a paper stencil is used by a tattoo artist for transferring the design to the skin, it shall be single-use and disposable. The use of roll-on or stick deodorants for tattoo site preparation is prohibited.

(15) The stencil shall be applied with antimicrobial soap, or a Health Authority approved product dispensed from a container in a manner that does not contaminate the unused portion.

(16) When the design is drawn directly onto the skin, autoclavable, pre-sterilized pens shall be used, or single-use, non-toxic pens or markers shall be used and discarded after each use.

(17) The completed tattoo shall be washed with a single-use towel saturated with an antimicrobial solution.

(18) A sterile bandage or dressing shall then be applied to the finished tattoo. For procedures such as "permanent makeup", "microdermapigmentation", "micropigment implantation", "microblading", "microshading", "micro-needling with the use of pigment", cosmetic tattooing or any other similar procedures, the use of a sealed or non-sticking wrap or dressing is not required.

Cite as Ga. Comp. R. & Regs. R. 511-3-8-.15
Authority: O.C.G.A. § 31-40-5.
History. Original Rule entitled "Tattoo Procedures" adopted. F. Mar. 8, 2023; eff. Apr. 6, 2023, as specified by the Agency.

Rule 511-3-8-.16. Piercing Jewelry.

(1) Client and the body piercer should have appropriate size and quality jewelry chosen before the procedure begins.

(2) Jewelry used in piercing shall meet the requirements of DPH Rule 511-3-8-.04(45)(a) - (k) and consist of a material rated by the ASTM or the ISO as being suitable for permanent surgical implant, such as stainless steel, titanium, niobium, solid platinum, or a dense low porosity plastic such as Tygon or PTFE. Copies of the jewelry manufacturer's documentation which verify compliance with standards must be available for inspection on request. Solid 14 karat or higher, white, or yellow nickel-free gold may also be used. Purity verification must be available for inspection on request.

(3) The jewelry must be free of nicks, scratches, or irregular surfaces.

(4) All jewelry must be properly sterilized prior to use in a medical grade chamber or cassette autoclave. Any two-piece or multi-piece jewelry that is screwed or pieced together must be separated prior to sterilization. Pre-sterilized jewelry is allowed if documentation is provided from the manufacturer stating all parts of the jewelry is pre-sterilized.

(5) Should jewelry become contaminated during the piercing process, a sterile piece of jewelry must be used, or re-sterilization must occur prior to use.

(6) Ear studs or other jewelry designed for ear lobe piercing are not appropriate jewelry for other body parts and shall not be used for any other purpose.

Cite as Ga. Comp. R. & Regs. R. 511-3-8-.16
Authority: O.C.G.A. § 31-40-5.
History. Original Rule entitled "Piercing Jewelry" adopted. F. Mar. 8, 2023; eff. Apr. 6, 2023, as specified by the Agency.

Rule 511-3-8-.17. Body Piercing Procedures.

(1) Medical grade disposable gloves shall be worn during the preparation of equipment for a piercing procedure and during the procedure. Vinyl gloves are not permissible.

(2) Before the procedure begins, all sterilized instruments to be used in the body piercing must be placed on a medical grade liner that is placed on a disinfected surface. Any nonsterilized equipment may be sterilized in a medical grade cassette autoclave before the procedure begins and kept in the cassette.

(3) Single use, sterilized piercing needles shall be used and disposed of immediately after use into a puncture-resistant or disposable biohazard container.

(4) No approved tool may be modified and used for anything other than its intended use as per the manufacturer's recommendations.

(5) Pre-sterilize all reusable equipment such as forceps, hemostats, calipers, and tubes in sealed, properly labeled, sterile indicator bags. These items are to be used only on one person in one sitting. After one such use, they must be cleaned in an ultrasonic cleaner, placed in sealed indicator bags, properly labeled, autoclaved, and stored in sterile indicator bags.

(6) Sterilized instruments shall remain in sterile packages until opened in front of the client.

(7) Single-use towels or gauze shall be used in preparing the piercing site and shall be disposed of after use on each client.

(8) If shaving is necessary, single-use disposable razors shall be used and discarded into a puncture-resistant container between clients and as otherwise needed.

(9) After shaving the area to be pierced, or if the area does not need to be shaved, the piercing site shall be thoroughly cleaned with an antimicrobial solution used in accordance with manufacturer's label instructions.

(10) In the case of oral piercings, the operator shall provide the individual with antimicrobial mouthwash in a single-use cup and shall ensure that the individual utilizes the mouthwash provided and rinses based on the manufacturer's label instructions prior to

the procedure. In the case of a lip, labret, or cheek piercing, procedures described in this section for both skin and oral piercings shall be followed.

(11) If piercing a minor, the legal parent or guardian that signed the application must be in the procedure area while the minor is receiving the piercing.

Cite as Ga. Comp. R. & Regs. R. 511-3-8-.17
Authority: O.C.G.A. § 31-40-5.
History. Original Rule entitled "Body Piercing Procedures" adopted. F. Mar. 8, 2023; eff. Apr. 6, 2023, as specified by the Agency.

Rule 511-3-8-.18. Body Art After Care.

(1) Verbal and written instructions reviewed and approved by the Health Authority for the care of the body art procedure site shall be provided to each client by the artist upon completion of the procedure.

(a) The written instruction shall include, at a minimum: what to do, what to avoid, suggested care solutions/over-the-counter balms or treatments, cleaning instructions, and what to look for during the healing process.

(b) The written instructions shall advise the client to consult a healthcare provider at the first sign of infection and will contain the name, address, and phone number of the studio.

(c) The instructions will also list the name, address, and phone number of the Health Authority.

Cite as Ga. Comp. R. & Regs. R. 511-3-8-.18
Authority: O.C.G.A. § 31-40-5.
History. Original Rule entitled "Body Art After Care" adopted. F. Mar. 8, 2023; eff. Apr. 6, 2023, as specified by the Agency.

Rule 511-3-8-.19. Disinfection of Workplace.

(1) Each Body Art Studio must be kept clean and sanitary. The owner must develop and implement a written cleaning schedule that includes appropriate methods of decontamination and tasks or procedures to be performed.

(2) This written schedule must be based on the location within the studio, the type of surfaces to be cleaned, type of possible contamination present, the tasks, or procedures to be performed, and their location within the studio.

(3) The following procedures should be adhered to:

(a) A Body Artist shall only conduct body art activities under sanitary conditions.

(b) Clean and sanitize all equipment and work surfaces with an appropriate EPA-registered disinfectant after completion of the body art procedures and at the end of the work shift or when surfaces have become contaminated since the last cleaning.

(c) Remove and replace protective coverings after each body art procedure.

(d) Inspect and sanitize, on a daily basis, reusable receptacles such as bins, pails, and cans that have the likelihood of becoming contaminated. When contamination is visible, clean and sanitize receptacles immediately.

Cite as Ga. Comp. R. & Regs. R. 511-3-8-.19
Authority: O.C.G.A. § 31-40-5.
History. Original Rule entitled "Disinfection of Workplace" adopted. F. Mar. 8, 2023; eff. Apr. 6, 2023, as specified by the Agency.

Rule 511-3-8-.20. Disposal of Biomedical Waste.

(1) Needles, razors, or other sharp instruments used during body art procedures, shall be placed in puncture-resistant, closed containers immediately after use, handled and disposed of according to the provisions of this Chapter.

(2) Used needles shall not be purposely bent or broken, or otherwise manipulated by hand to prevent needle sticks or injury and exposure to blood or body fluids.

(3) Containers of sharp waste shall be sent to a facility where they are either incinerated, rendered non-hazardous, or deposited in a landfill approved to accept biomedical waste in compliance with the Solid Waste Management regulations of the Georgia Department of Natural Resources, Environmental Protection Division.

(4) Contaminated waste, which may release liquid blood or body fluids when compressed or may release dried blood or body fluids when handled, must be placed in a sealed bag. It must then be disposed of in compliance with Georgia Department of Natural Resources - Environmental Protection Division - Solid Waste Management - Chapter 391-3-4.15.

(5) Waste containers shall be kept closed when not in use.

(6) Disposable waste shall be handled, stored, and disposed of to minimize direct exposure of personnel to waste materials.

(7) At least one covered waste receptacle shall be provided in each artist area. Receptacles in the artist area shall be emptied daily, and solid waste shall be removed from the premises at least weekly or more often if necessary. All waste receptacles shall be covered and maintained.

(8) Solid waste shall not be stored outdoors unless in a secured and lidded dumpster that complies with applicable county or municipal solid waste ordinances.

Cite as Ga. Comp. R. & Regs. R. 511-3-8-.20
Authority: O.C.G.A. § 31-40-5.
History. Original Rule entitled "Disposal of Biomedical Waste" adopted. F. Mar. 8, 2023; eff. Apr. 6, 2023, as specified by the Agency.

Rule 511-3-8-.21. Signage.

Each Body Art Studio shall conspicuously display in a prominent place, easily seen by clients, a printed sign that warns that any body art on the face, neck, forearm, hand, or lower leg of an individual may automatically disqualify such individual from military service in the armed forces of the United States. Such notice shall be at least 11 inches by 14 inches in size, with letters at least one inch in height.

Cite as Ga. Comp. R. & Regs. R. 511-3-8-.21
Authority: O.C.G.A. § 31-40-8.
History. Original Rule entitled "Signage" adopted. F. Mar. 8, 2023; eff. Apr. 6, 2023, as specified by the Agency.

Rule 511-3-8-.22. Inspections.

(1) The studio and all its records shall be available for review and examination by properly identified representatives of the Health Authority. A Body Art Studio shall be inspected no less than twice annually.

(2) A copy of the most recent inspection report shall be displayed in a conspicuous location within fifteen feet of the front or primary public door and between five feet and seven feet from the floor and in an area where it can be read at a distance of one foot away, or if this is impractical, in an area designated by the Health Authority.

(3) Representatives of the Health Authority, after proper identification, shall be permitted to enter any Body Art Studio or operation at any time during business hours for the purpose of making inspections and reviewing of pertinent records to determine compliance with this Chapter. The permit holder is responsible for ensuring that at least one person on site is authorized and able to provide access to all rooms, facilities, and records of the Body Art Studio, and who can demonstrate that there is sufficient daily oversight of employees, body artists and perform routine monitoring of operations.

(4) Representatives of the Health Authority who conduct inspections of Body Art Studios must complete an OSHA compliant Bloodborne Pathogens/ Universal Precautions training, pass a written exam developed by the Department, and comply with other training requirements established by the Department.

(5) Inspection results - Reporting and Scoring.

(a) Inspection results for Body Art Studios shall be recorded on standard forms provided by the Department.

(b) The scoring system shall include a weighted point value for each requirement in which critical items are assigned values of five points, with non-critical violations having assigned values of either one or two points.

(6) The rating score shall be the total of the weighted point values for all violations subtracted from one hundred.

(a) Correction of imminent health hazards shall be corrected immediately. Critical violations shall be corrected within seventy-two hours, and non-critical violations within ten calendar days.

(b) Upon declaration of an imminent health hazard which cannot be immediately corrected, the local Health Authority shall issue an order requiring the studio to immediately cease operations until authorized to reopen.

(c) Considering the nature of the potential hazard involved and the complexity of the corrective action needed, the Health Authority may agree to or specify a longer time frame, not to exceed ten calendar days after the inspection, for the permit holder to correct violations.

(d) Failure to correct these violations to the satisfaction of the Health Authority or the Department may result in such emergency action including enforcement actions pursuant to O.C.G.A. § 31-5-2 and 31-5-9(a).

(e) In the case of temporary Body Art Studios, all critical violations shall be corrected immediately, or provisions must be made to satisfy the violation until a complete correction can be made within twenty-four hours. If critical violations are not corrected within twenty-four hours, the studio shall immediately cease operations until authorized to resume by the Health Authority. Upon declaration of an imminent health hazard which cannot be immediately corrected, the Health Authority shall issue an order requiring the studio to immediately cease operations until authorized to reopen by the Health Authority.

(f) Follow up inspections when required will be performed within the time or as determined by the Health Authority.

(7) Inspection Frequency.

(a) The Health Authority shall conduct one or more construction inspections for newly constructed or major structurally modified studios to verify that the Body Art Studio is constructed and equipped in accordance with the approved plans and specifications and is in compliance with law and this Chapter. In addition, the Health Authority may conduct one or more preoperational inspections to verify compliance with the construction and equipment requirements of this Chapter at the time of a change in the permit holder of an existing Body Art Studio.

(b) An initial inspection will be conducted in a studio prior to the body art permit being issued.

(c) To allow the permit holder of the Body Art Studio sufficient time to fully train body artists, employees and to ensure the studio has implemented all written procedures, the first routine inspection will be conducted within sixty days after the opening of the studio; and it will mark the beginning of the studio's compliance history with this Chapter.

(c) After the first routine inspection, studios maintaining an "A" or "B" score shall be inspected based on the minimum inspection frequency established by this Rule.

(e) Studios that receive a "C" or "U" score will have at least one additional routine inspection added in a twelve-month period and may have more inspections at the discretion of the Health Authority.

(f) Follow-up inspections may be conducted at any time at the discretion of the Health Authority but shall be conducted within ten days after a studio receives a grade "U".

(8) Grading Inspections. Inspections will receive a letter grade based on the numerical score as follows:

(a) The letter grade "A" means that the majority of the requirements of this Chapter have been met and is applied to a score of 90 to 100.

(b) The letter grade "B" means satisfactory compliance and is applied to a score of 80 to 89.

(c) The letter grade "C" means marginal compliance and is applied to a score of 70 to 79.

(d) The letter grade "U" means unsatisfactory compliance and is applied to a score of 69 or less.

(9) Informal Follow-up Inspection. If a follow-up inspection cannot be conducted by the Health Authority, then an informal follow-up may be performed to confirm correction of the violations that were cited on the routine inspection that were not corrected at the time

of the inspection. On an informal follow-up inspection, an inspection report addendum will be completed, documenting the violations that have been corrected. It will be noted on the addendum that this was an informal follow-up inspection, and the studio will keep the same grade that was earned on the previous routine inspection. The addendum will be made available by the Body Art Studio to the public upon request.

(10) Upon the completion of an inspection, the person in charge of the studio shall sign the inspection report form. The Health Authority shall inform the person in charge that:

(a) The person in charge's signature shall not necessarily indicate agreement with the findings noted on the inspection.

(b) Refusal to sign an acknowledgment of receipt will not affect the permit holder's obligation to correct the violations noted in the inspection report within the time frames specified, and the refusal to sign an acknowledgment of receipt will be noted in the inspection report and conveyed to the Health Authority's historical record for the Body Art Studio.

(11) Failure to make timely corrections to the satisfaction of the Health Authority or the Department may subject the Body Art Studio to suspension or revocation of its permit.

(12) The Health Authority may approve a compliance schedule that extends beyond the time limits specified in this Rule if a schedule of compliance is submitted by the permit holder and no imminent health hazard exists or will result from allowing an extended schedule for compliance.

(13) Voluntary Closure. A Body Art Studio that is graded with two critical violations or is graded as a "U" on two consecutive inspections or is graded as a "U" and does not earn at least a grade of "C" within ten days of receiving the "U" or does not correct requires violations within seventy-two hours (if allowed) of receiving an inspection report may be requested to voluntarily close until all violations are corrected.

Cite as Ga. Comp. R. & Regs. R. 511-3-8-.22
Authority: O.C.G.A. §§ 31-40-3; 31-40-6.
History. Original Rule entitled "Inspections" adopted. F. Mar. 8, 2023; eff. Apr. 6, 2023, as specified by the Agency.

Rule 511-3-8-.23. Compliance and Enforcement.

(1) The administration and enforcement of this Chapter shall be as prescribed in O.C.G.A. Section 31-5-1 et seq. The Health Authority shall have the power and authority to suspend, or revoke body art studio permits for failure to comply with the provisions of this Chapter.

(2) The Health Authority shall have primary responsibility for the enforcement of this Chapter within its jurisdiction.

(3) No person or entity shall operate a Body Art Studio or conduct body art activities without a valid permit or certification issued pursuant to this Chapter.

(4) Suspension or Revocation of Permits. The Health Authority shall have the power and authority to suspend or revoke a permit if the permit owner or its body artists or employees are unwilling or unable to comply with these regulations, the regulations of the local Health Authority, or the provisions of O.C.G.A. Section 31-28-1 et seq.

(a) A permit holder shall be presumed unwilling or unable to comply if it refuses to allow the Health Authority to enter upon and inspect the premises of the Body Art Studio at any reasonable time, or if any critical violation is found to be uncorrected upon two consecutive inspections, or upon continuous violation of this Chapter.

(b) The revocation of a permit may be appealed to the Department of Public Health in accordance with O.C.G.A. Section 31-5-3 by sending written notice, by certified mail or statutory overnight delivery, addressed to the Department of Public Health, Office of General Counsel, with a copy to the Health Authority official that revoked the permit. Within ten days of receiving the notice, the Health Authority shall provide the Department with a copy of its entire file on the inspections and actions that led to the revocation of the permit. The Department shall schedule a hearing within twenty days of receiving the notice and shall decide the matter upon the arguments of the parties and the administrative record.

(5) Conditions Warranting Action. The Health Authority may summarily suspend a permit to operate a Body Art Studio if it determines through inspection, or examination of body artists, employees, records, or other means as specified in this Chapter, that an imminent health hazard exists.

(6) Resumption of Operations. If operations of a Body Art Studio are discontinued due to the existence of an imminent health hazard, voluntary closure, or otherwise according to law, the permit holder shall obtain approval from the Health Authority before resuming operations.

Cite as Ga. Comp. R. & Regs. R. 511-3-8-.23
Authority: O.C.G.A. §§ 31-5-1*et seq*.; 31-40-3; 31-40-4.
History. Original Rule entitled "Compliance and Enforcement" adopted. F. Mar. 8, 2023; eff. Apr. 6, 2023, as specified by the Agency.

Rule 511-3-8-.24. Fees.

The Department will adopt a fee schedule for Body Artist Certification.

Cite as Ga. Comp. R. & Regs. R. 511-3-8-.24
Authority: O.C.G.A. § 31-40-5.
History. Original Rule entitled "Fees" adopted. F. Mar. 8, 2023; eff. Apr. 6, 2023, as specified by the Agency.

Chapter 511-4. ANIMALS AND INSECTS.

Subject 511-4-1. [Repealed].

Rule 511-4-1-.01. [Repealed].

Cite as Ga. Comp. R. & Regs. R. 511-4-1-.01
Authority: O.C.G.A. §§ 31-2A-6, 31-12-9.
History. Original Rule entitled "Definitions" adopted. F. Sep. 20, 2013; eff. Oct. 10, 2013.
Repealed: F. Nov. 8, 2017; eff. Nov. 28, 2017.

Rule 511-4-1-.02. [Repealed].

Cite as Ga. Comp. R. & Regs. R. 511-4-1-.02
Authority: O.C.G.A. §§ 31-2A-6, 31-12-9.
History. Original Rule entitled "Permit" adopted. F. Sep. 20, 2013; eff. Oct. 10, 2013.
Repealed: F. Nov. 8, 2017; eff. Nov. 28, 2017.

Rule 511-4-1-.03. [Repealed].

Cite as Ga. Comp. R. & Regs. R. 511-4-1-.03
Authority: O.C.G.A. §§ 31-2A-6, 31-12-9.
History. Original Rule entitled "Procedures" adopted. F. Sep. 20, 2013; eff. Oct. 10, 2013.
Repealed: F. Nov. 8, 2017; eff. Nov. 28, 2017.

Rule 511-4-1-.04. [Repealed].

Cite as Ga. Comp. R. & Regs. R. 511-4-1-.04
Authority: O.C.G.A. §§ 31-2A-6, 31-12-9.
History. Original Rule entitled "Appeal to Superior Court" adopted. F. Sep. 20, 2013; eff. Oct. 10, 2013.
Repealed: F. Nov. 8, 2017; eff. Nov. 28, 2017.

Rule 511-4-1-.05. [Repealed].

Cite as Ga. Comp. R. & Regs. R. 511-4-1-.05
Authority: O.C.G.A. §§ 31-2A-6, 31-12-9.
History. Original Rule entitled "Requirements" adopted. F. Sep. 20, 2013; eff. Oct. 10, 2013.
Repealed: F. Nov. 8, 2017; eff. Nov. 28, 2017.

Rule 511-4-1-.06. [Repealed].

Cite as Ga. Comp. R. & Regs. R. 511-4-1-.06
Authority: O.C.G.A. §§ 31-2A-6, 31-12-9.
History. Original Rule entitled "Bands and Banding" adopted. F. Sep. 20, 2013; eff. Oct. 10, 2013.
Repealed: F. Nov. 8, 2017; eff. Nov. 28, 2017.

Rule 511-4-1-.07. [Repealed].

Cite as Ga. Comp. R. & Regs. R. 511-4-1-.07
Authority: O.C.G.A. §§ 31-2A-6, 31-12-9.
History. Original Rule entitled "Records" adopted. F. Sep. 20, 2013; eff. Oct. 10, 2013.
Repealed: F. Nov. 8, 2017; eff. Nov. 28, 2017.

Rule 511-4-1-.08. [Repealed].

Cite as Ga. Comp. R. & Regs. R. 511-4-1-.08
Authority: O.C.G.A. §§ 31-2A-6, 31-12-9.
History. Original Rule entitled "Psittacosis and Other Diseases Infectious to Man" adopted. F. Sep. 20, 2013; eff. Oct. 10, 2013.
Repealed: F. Nov. 8, 2017; eff. Nov. 28, 2017.

Rule 511-4-1-.09. [Repealed].

Cite as Ga. Comp. R. & Regs. R. 511-4-1-.09
Authority: O.C.G.A. §§ 31-2A-6, 31-12-9.
History. Original Rule entitled "Sanitation" adopted. F. Sep. 20, 2013; eff. Oct. 10, 2013.
Repealed: F. Nov. 8, 2017; eff. Nov. 28, 2017.

Rule 511-4-1-.10. [Repealed].

Cite as Ga. Comp. R. & Regs. R. 511-4-1-.10
Authority: O.C.G.A. §§ 31-2A-6, 31-12-9.
History. Original Rule entitled "Damages" adopted. F. Sep. 20, 2013; eff. Oct. 10, 2013.
Repealed: F. Nov. 8, 2017; eff. Nov. 28, 2017.

Subject 511-4-2. [Repealed].

Rule 511-4-2-.01. [Repealed].

Cite as Ga. Comp. R. & Regs. R. 511-4-2-.01
Authority: O.C.G.A. § 31-2A-6.
History. Original Rule entitled "Quarantine of Dogs When Rabies is Known to Exist" adopted. F. Sep. 20, 2013; eff. Oct. 10, 2013.

Repealed: F. Jan. 22, 2018; eff. Feb. 11, 2018.

Rule 511-4-2-.02. [Repealed].

Cite as Ga. Comp. R. & Regs. R. 511-4-2-.02
Authority: O.C.G.A. § 31-2A-6.
History. Original Rule entitled "Seven Days Quarantine of Biting Animals" adopted. F. Sep. 20, 2013; eff. Oct. 10, 2013.
Repealed: F. Jan. 22, 2018; eff. Feb. 11, 2018.

Rule 511-4-2-.03. [Repealed].

Cite as Ga. Comp. R. & Regs. R. 511-4-2-.03
Authority: O.C.G.A. § Sec. 31-2A-6.
History. Original Rule entitled "Sixty Days Quarantine of Dogs Bitten by Rabid Animals" adopted. F. Sep. 20, 2013; eff. Oct. 10, 2013.
Repealed: F. Jan. 22, 2018; eff. Feb. 11, 2018.

Subject 511-4-3. REPEALED.

Rule 511-4-3-.01. Repealed.

Cite as Ga. Comp. R. & Regs. R. 511-4-3-.01
Authority: O.C.G.A. § 31-2A-6.
History. Original Rule entitled "Plans for Pond or Lake" adopted. F. Sep. 20, 2013; eff. Oct. 10, 2013.
Repealed: F. Oct. 20, 2015; eff. Nov. 9, 2015.

Rule 511-4-3-.02. Repealed.

Cite as Ga. Comp. R. & Regs. R. 511-4-3-.02
Authority: O.C.G.A. § 31-2A-6.
History. Original Rule entitled "Description of Plan" adopted. F. Sep. 20, 2013; eff. Oct. 10, 2013.
Repealed: F. Oct. 20, 2015; eff. Nov. 9, 2015.

Rule 511-4-3-.03. Repealed.

Cite as Ga. Comp. R. & Regs. R. 511-4-3-.03
Authority: O.C.G.A. § 31-2A-6.
History. Original Rule entitled "Authorization of Construction" adopted. F. Sep. 20, 2013; eff. Oct. 10, 2013
Repealed: F. Oct. 20, 2015; eff. Nov. 9, 2015.

Rule 511-4-3-.04. Repealed.

Cite as Ga. Comp. R. & Regs. R. 511-4-3-.04
Authority: O.C.G.A. § 31-2A-6.
History. Original Rule entitled "Inspection" adopted. F. Sep. 20, 2013; eff. Oct. 10, 2013.
Repealed: F. Oct. 20, 2015; eff. Nov. 9, 2015.

Rule 511-4-3-.05. Repealed.

Cite as Ga. Comp. R. & Regs. R. 511-4-3-.05
Authority: O.C.G.A. § 31-2A-6.
History. Original Rule entitled "Issuance of Permit" adopted. F. Sep. 20, 2013; eff. Oct. 10, 2013.
Repealed: F. Oct. 20, 2015; eff. Nov. 9, 2015.

Chapter 511-5. HEALTH PROMOTION.

Subject 511-5-1. MIDWIFERY.

Rule 511-5-1-.01. Definitions.

(1) **Midwife** means a person who is not a physician licensed under the laws of Georgia, and who is regularly engaged in attending women in childbirth or holds himself or herself out to the public as providing the services of a midwife, whether or not for consideration.

(2) **Midwifery** means and includes any act or practice of attending women in childbirth, whether or not for consideration. Midwifery also includes the independent management of care of newborns, and the antepartal, intrapartal, or postpartal care of women.

Cite as Ga. Comp. R. & Regs. R. 511-5-1-.01
Authority: O.C.G.A. Secs. 31-2A-6, 31-26-3.
History. Original Rule entitled "Definitions/Scope of Practice" adopted. F. Sep. 20, 2013; eff. Oct. 10, 2013.
Repealed: New Rule entitled "Definitions" adopted. F. Nov. 13, 2015; eff. Dec. 3, 2015.

Rule 511-5-1-.02. Authority to Practice as a Midwife.

No person shall practice midwifery, or hold himself or herself out to the public as a midwife, unless that person has a current certification from the Georgia Board of Nursing to practice as a Certified Nurse-Midwife in accordance with Ga. Comp. R. & Regs. 410-12-.02 "Rules for Certified Nurse-Midwives." Such certification from the Board of Nursing shall constitute the certification required under Code Section 31-26-2, and no additional certification from the Department of Public Health or from a County Board of Health shall be required.

Cite as Ga. Comp. R. & Regs. R. 511-5-1-.02
Authority: O.C.G.A. Secs. 31-2A-6, 31-26-3.
History. Original Rule entitled "Requirements for Recognition and Authority to Practice as a Certified Nurse-Midwife" adopted. F. Sep. 20, 2013; eff. Oct. 10, 2013.

Repealed: New Rule entitled "Authority to Practice as a Midwife" adopted. F. Nov. 13, 2015; eff. Dec. 3, 2015.

Rule 511-5-1-.03. [Repealed].

Cite as Ga. Comp. R. & Regs. R. 511-5-1-.03
Authority: O.C.G.A. § 31-2A-6.
History. Original Rule entitled "Failure of the Examination" adopted. F. Sep. 20, 2013; eff. Oct. 10, 2013.
Repealed: F. Nov. 13, 2015; eff. Dec. 3, 2015.

Rule 511-5-1-.04. [Repealed].

Cite as Ga. Comp. R. & Regs. R. 511-5-1-.04
Authority: O.C.G.A. § 31-2A-6.
History. Original Rule entitled "Initial Recognition Process" adopted. F. Sep. 20, 2013; eff. Oct. 10, 2013.
Repealed: F. Nov. 13, 2015; eff. Dec. 3, 2015.

Rule 511-5-1-.05. [Repealed].

Cite as Ga. Comp. R. & Regs. R. 511-5-1-.05
Authority: O.C.G.A. § 31-2A-6.
History. Original Rule entitled "Continued Recognition" adopted. F. Sep. 20, 2013; eff. Oct. 10, 2013.
Repealed: F. Nov. 13, 2015; eff. Dec. 3, 2015.

Subject 511-5-2. THE FLUORIDATION OF PUBLIC WATER SUPPLIES.

Rule 511-5-2-.01. Fluoridation.

(1) Efficacy of Fluoridation:

(a) Dental decay is a disease of such magnitude that practically the entire population of Georgia suffers from it. No age group is immune and no social strata are exempt. Every major health organization in the state and nation advocates fluoridation of public water supplies as the most acceptable public health approach in reducing the tremendous backlog of this disease. The medical, dental and public health professions in Georgia have repeatedly endorsed and even urged fluoridation through resolutions that are on file in the Department of Public Health.

(b) The Department strongly advocates community water fluoridation for preventing dental decay and for its beneficial effect on the general health of the public, and, in fulfilling its duty to the citizenry of the state, urges the immediate application of fluorides to all public water systems deficient in this element.

(c) For the most effective results in Georgia, the optimal concentration of fluorides in the finished water should be maintained at 0.85 ppm. (0.85 of 1 part fluoride to one million parts of water) with a lower limit of 0.7 ppm. and an upper limit of 1.0 ppm. It is only through constantly maintaining the recommended average (0.85 ppm.) can the citizens expect maximum reduction in tooth decay. Studies have shown proportionately reduced benefits when the fluoride concentration is maintained below the recommended average.

(2) Plans and Specifications:

(a) In order for a community to have the formal approval of the Department, the procedure must be carried out according to the Georgia Health Laws and Rules and Regulations.

(b) Duplicate plans and specifications covering the proposed fluoridation installation or installations, including all appurtenant devices, structures, laboratory equipment, storage and handling facilities, together with a report describing the fluoride compound to be used and the procedures to be followed in controlling the application of the chemical agent, shall be prepared by a Registered Engineer. The plan, specifications and report shall be submitted by the owner of the public water supply to the Department for review and approval.

(c) The Department will approve, disapprove or suggest changes or modifications to make the plan acceptable, and will encourage corrections in public water supplies which are deficient in other major health protective features.

Cite as Ga. Comp. R. & Regs. R. 511-5-2-.01
Authority: O.C.G.A. Secs. 31-2A-6.
History. Original Rule entitled "Fluoridation" adopted. F. Sep. 20, 2013; eff. Oct. 10, 2013.

Subject 511-5-3. PROPHYLACTIC TREATMENT OF THE EYES OF THE NEWBORN.

Rule 511-5-3-.01. Purpose.

The purpose of this Rule is to prescribe the prophylactic treatment of the eyes of the newborn; to require the person in attendance at childbirth to instill the prophylactic in the eyes of the live newborn immediately following birth; and to require the reporting of *Ophthalmia Neonatorium*.

Cite as Ga. Comp. R. & Regs. R. 511-5-3-.01
Authority: O.C.G.A. Sec. 31-2A-6.
History. Original Rule entitled "Purpose" adopted. F. Sep. 20, 2013; eff. Oct. 10, 2013.

Rule 511-5-3-.02. Definitions.

Unless a different meaning is required by the context, the following terms as used in these Rules shall have the meaning hereafter respectively ascribed to same:

(1) "*Ophthalmia Neonatorium*" means an infection by *Neisseria Gonoccocus* of the eyes of an infant and occurring in the early neonatal period.

(2) "Prophylactic treatment" means the instillation of a one (1) percent aqueous silver nitrate solution in a single dose ampule, or an ophthalmic ointment or drops containing one (1) percent tetracycline or one-half (0.5) percent erythromycin in a single-use tube or ampule in the eyes of the live newborn immediately following birth. None of the agents used for prophylaxis should be flushed from the eyes following instillation.

Cite as Ga. Comp. R. & Regs. R. 511-5-3-.02
Authority: O.C.G.A. Sec. 31-2A-6.
History. Original Rule entitled "Definitions" adopted. F. Sep. 20, 2013; eff. Oct. 10, 2013.

Rule 511-5-3-.03. Provisions.

(1) The person in attendance at any childbirth shall instill the prophylactic treatment in the eyes of the live newborn immediately following birth.

(2) On written application setting forth the objectives, the reasons requiring the use of a prophylactic treatment other than that defined in Section 511-5-3-.02(b) and the control methods to be followed, the Georgia Department of Public Health may authorize the use of another agent or method of prophylactic treatment of the eyes of the newborn for research and other controlled use.

(3) Any physician licensed to practice in Georgia under the Medical Practice Act shall report each case of *Gonoccocal Ophthalmia Neonatorium* diagnosed or treated by him.

(4) Each person who by Georgia law is permitted to attend the pregnant woman at childbirth but who is not permitted by Georgia law to prescribe medication or treat *Ophthalmia Neonatorium* shall immediately upon discovery report to the local District Health Director any newborn with signs of *Ophthalmia Neonatorium* such as swelling, redness of eyes or any discharge therefrom.

Cite as Ga. Comp. R. & Regs. R. 511-5-3-.03
Authority: O.C.G.A. Sec. 31-2A-6.
History. Original Rule entitled "Provisions" adopted. F. Sep. 20, 2013; eff. Oct. 10, 2013.

Subject 511-5-4. SEROLOGIC TESTS FOR PREGNANT WOMEN.

Rule 511-5-4-.01. Purpose.

The purpose of this Rule is to detect the presence of certain infectious diseases in a pregnant or postpartum woman and provide appropriate treatment for the woman and baby.

Cite as Ga. Comp. R. & Regs. R. 511-5-4-.01
Authority: O.C.G.A. §§ 31-2A-6, 31-12-3, 31-17-4.
History. Original Rule entitled "Purpose" adopted. F. Sep. 20, 2013; eff. Oct. 10, 2013.
Amended: F. Aug. 1, 2022; eff. Aug. 31, 2022, as specified by the Agency.

Rule 511-5-4-.02. Definitions.

Unless a different meaning is required by the context, the following terms as used in these Rules shall have the meaning hereinafter respectively ascribed to same:

(a) "Standard serologic test for syphilis" means a test designed to detect evidence of syphilis.

(b) "Standard serologic test for hepatitis B" means a test designed to detect evidence of hepatitis B surface antigen (HBsAg).

(c) "Standard serologic test for hepatitis C" means a test designed to detect evidence of hepatitis C. This definition includes an HCV-antibody test with reflect HCV RNA polymerase chain reaction (PCR) test.

(d) "Standard serologic test for HIV" means a test designed to detect evidence of HIV.

(e) "Department" means the Georgia Department of Public Health.

Cite as Ga. Comp. R. & Regs. R. 511-5-4-.02
Authority: O.C.G.A. §§ 31-2A-6, 31-12-3, 31-17-4.
History. Original Rule entitled "Definitions" adopted. F. Sep. 20, 2013; eff. Oct. 10, 2013.
Amended: F. Aug. 1, 2022; eff. Aug. 31, 2022, as specified by the Agency.

Rule 511-5-4-.03. Provisions.

(1) Unless the patient declines screening, every pregnant woman shall have a blood specimen taken as prescribed herein for a standard serologic test for syphilis, a standard serologic test for HIV, a standard serologic test for hepatitis B and a standard serologic test for hepatitis C.

(2) Every health care provider in this state providing prenatal care to a pregnant woman, or delivering or attending a woman just delivered, shall take or cause to be taken a venous blood specimen for submission to a clinical laboratory for a standard serologic test for

syphilis, a standard serologic test for HIV, a standard serologic test for hepatitis B and a standard serologic test for hepatitis C, as follows:

(a) At the initial visit to the health care provider for prenatal care, a standard serologic test for:

1. Syphilis;
2. HIV;
3. Hepatitis B; and
4. Hepatitis C.

(b) In the third trimester in the following circumstances:

1. A standard serologic test for syphilis, as required in O.C.G.A. Section 31-17-4.2. The specimen shall be taken early during the third trimester, ideally at 28-32 weeks of gestation;
2. A standard serologic test for HIV, as required in O.C.G.A. Section 31-17-4.2; and
3. A standard serologic test for hepatitis C if the woman has known or potential exposures to hepatitis C.

(c) As soon as possible upon admission to the hospital or birth facility for delivery:

1. A standard serologic test for syphilis, for women not tested prenatally, who deliver a stillborn infant, are at high risk for syphilis, or as long as Georgia is classified by the Centers for Disease Control and Prevention as a state with high syphilis morbidity. In accordance with O.C.G.A. Section 31-17-4.2, if a syphilis test was conducted in the third trimester, and the woman does not disclose activities posing a risk for syphilis infection more recently, this test is not required;
2. A standard serologic test for HIV, for women not tested prenatally and for women at increased risk for HIV infection who were not tested in the third trimester. In accordance with O.C.G.A. Section 31-17-4.2, if an HIV test was conducted in the third trimester, and the woman does not disclose activities posing a risk for HIV infection more recently, this test is not required;
3. A standard serologic test for Hepatitis B, for women not tested prenatally, with signs or symptoms of hepatitis, or at high risk for hepatitis B; and
4. A standard serologic test for Hepatitis C, for women not tested prenatally.

(3) Patients shall be notified of all tests to be conducted and shall have the opportunity to refuse the test.

Cite as Ga. Comp. R. & Regs. R. 511-5-4-.03
Authority: O.C.G.A. §§ 31-2A-6, 31-12-3, 31-17-4.
History. Original Rule entitled "Provisions" adopted. F. Sep. 20, 2013; eff. Oct. 10, 2013.
Amended: F. Aug. 1, 2022; eff. Aug. 31, 2022, as specified by the Agency.

Subject 511-5-5. TESTING FOR INHERITED DISORDERS IN THE NEWBORN.

Rule 511-5-5-.01. Purpose.

The purpose of these rules is to provide administrative details and procedures to ensure that all newborn babies in Georgia are promptly tested for certain conditions which pose a threat of severe illness, physical or developmental disability, or death.

Cite as Ga. Comp. R. & Regs. R. 511-5-5-.01
Authority: O.C.G.A. 31-2A-6, 31-12-5 through -7.
History. Original Rule entitled "Definitions" adopted. F. Sep. 20, 2013; eff. Oct. 10, 2013.
Repealed: New Rule entitled "Purpose" adopted. F. May 13, 2014; eff. June 2, 2014.

Rule 511-5-5-.02. Definitions.

(a) "Abnormal test result" is a test result from blood testing or physiologic monitoring that is outside the screening limits set forth in the current edition of the Department's "Georgia Newborn Screening Program Policy and Procedure Manual";

(b) "Adequate specimen" is a dried blood spot specimen that is properly collected in accordance with the current edition of the Department's "Georgia Newborn Screening Program Policy and Procedure Manual";

(c) "Approved laboratory" is a laboratory which has been specifically approved by the Department to conduct laboratory analysis of dried blood spot specimens for the disorders specified in the Georgia Newborn Screening Policy and Procedure Manual;

(d) "Automated auditory brainstem response" or "aABR" is a specific test method that measures the brainstem's response to acoustic stimulation of the ear, using equipment that automatically provides a pass/refer outcome;

(e) "Automated Otoacoustic Emissions Testing" or "aOAE" is a specific test method that elicits a physiologic response from the outer hair cells in the cochlea, using equipment that automatically provides a pass/refer outcome;

(f) "Birthing center" means any facility that is licensed by the Georgia Department of Community Health as a birthing center;

(g) "Critical Congenital Heart Disease" or CCHD refers to a group of serious heart defects that are present from birth, including coarctation of the aorta, double-outlet right ventricle, D-transposition of the great arteries, Ebstein anomaly, hypoplastic left heart syndrome, interrupted aortic arch, pulmonary atresia, single ventricle, total anomalous pulmonary venous connection, tetralogy of Fallot, tricuspid atresia, and truncus arteriosus;

(h) "Department" means the Georgia Department of Public Health;

(i) "Hospital" means any facility that is licensed by the Georgia Department of Community Health as a hospital;

(j) "Newborn Screening Specimen Card" or "NBS Card" means the current version of DPH Form 3491 used to collect information and blood specimen from a newborn baby;

(k) "Newborn Hearing Screening Test" means the completion of an objective, physiological test or battery of tests administered to determine the infant's hearing status and the need for further diagnostic testing by an audiologist or physician in accordance with the Georgia Newborn Screening Program Policy and Procedure Manual's approved instrumentation, protocols and pass/refer criteria;

(l) "Newborn Screening and Genetics Advisory Committee (NBSAC)" is a multi-disciplinary group of professional and consumer representatives with knowledge and expertise in newborn screening programs appointed by the Commissioner of Public Health;

(m) "Submitter" means any person or entity submitting a Newborn Screening Specimen Card for analysis;

(n) "Unsatisfactory Specimen" is a dried blood spot specimen that is rejected by the laboratory because the quality of the specimen does not allow accurate testing, or because critical information is missing from the NBS Card which inhibits the laboratory's ability to accurately identify the baby or interpret the test results.

Cite as Ga. Comp. R. & Regs. R. 511-5-5-.02
Authority: O.C.G.A. §§ 31-2A-6; 31-12-5 through -7; 31-22-2.
History. Original Rule entitled "Provisions" adopted. F. Sep. 20, 2013; eff. Oct. 10, 2013.
Repealed: New Rule entitled "Definitions" adopted. F. May 13, 2014; eff. June 2, 2014.
Amended: F. Nov. 29, 2021; eff. Dec. 29, 2021, as specified by the Agency.

Rule 511-5-5-.03. Testing Required of Newborn Babies.

(1) It is the goal of the Department that every baby born alive in Georgia shall be tested for the following conditions, unless its parents or legal guardians object in writing on the ground that such tests and treatment conflict with their religious beliefs:

(a) critical congenital heart disease (CCHD);

(b) hearing impairment;

(c) argininosuccinic aciduria;

(d) beta-ketothiolase deficiency;

(e) biotinidase deficiency;

(f) carnitine uptake defect;

(g) citrullinemia;

(h) congenital adrenal hyperplasia;

(i) congenital hypothyroidism;

(j) cystic fibrosis;

(k) galactosemia;

(l) glutaric acidemia type I;

(m) homocystinuria;

(n) isovaleric acidemia;

(o) Krabbe disease as a 3-year pilot program beginning September 21, 2021;

(p) long-chain acyl-CoA dehydrogenase deficiency;

(q) maple syrup urine disease;

(r) medium-chain acyl Co-A dehydrogenase deficiency;

(s) methylmalonic acidemia;

(t) mucopolysaccharidosis type 1;

(u) multiple carboxylase deficiency;

(v) phenylketonuria;

(w) pompe disease;

(x) propionic acidemia;

(y) severe combined immunodeficiency (SCID);

(z) sickle cell hemoglobinopathies;

(aa) spinal muscular atrophy;

(bb) trifunctional protein deficiency;

(cc) tyrosinemia;

(dd) very long-chain acyl-CoA dehydrogenase deficiency;

(ee) x-linked adrenoleukodystrophy;

(ff) 3-methylcrotonyl-CoA carboxylase deficiency; and

(gg) 3-OH 3-CH3 glutaric aciduria.

(2) Unless otherwise noted in subparagraph (1) above, testing for conditions (1)(c) through (gg) shall be conducted through laboratory analysis of the baby's blood on a Newborn Screening Specimen Card as provided in DPH Rule 511-5-5-.04.

Cite as Ga. Comp. R. & Regs. R. 511-5-5-.03
Authority: O.C.G.A. §§ 31-2A-6; 31-12-5 through -7.
History. Original Rule entitled "Testing Required of Newborn Babies" adopted. F. May 13, 2014; eff. June 2, 2014.
Amended: F. June 14, 2019; eff. July 15, 2019, as specified by the Agency.
Amended: F. Nov. 29, 2021; eff. Dec. 29, 2021, as specified by the Agency.

Rule 511-5-5-.04. Newborn Screening Specimen Cards and Laboratory Analysis.

(1) It shall be the responsibility of the hospital, birthing center, physician's office or other healthcare facility in which the baby is born to ensure that an NBS Card is properly completed and submitted to the Department in accordance with these Rules, and that the parents are given a copy of DPH Form 5506 ("Georgia Newborn Screening Program: What Every Parent Should Know"). If the birth occurs outside a hospital, birthing center, or other healthcare facility, then it shall be the responsibility of the attending physician or midwife to do so.

(2) A Newborn Screening Dried Bloodspot Specimen (DBS) shall be completed 24 hours after birth, as follows:

(a) All information requested on the NBS Card shall be legibly and accurately collected;

(b) Specimens of the baby's blood shall be collected and placed on the DBS in accordance with the current edition of the Georgia Newborn Screening Program Policy and Procedure Manual, and allowed to dry for at least three hours;

(c) The NBS Card shall be sent within 24 hours to the Department's Public Health Laboratory, using a courier service that ensures next business day delivery and allows the tracking of the package. A copy of the completed NBS Card shall be maintained with the baby's clinical records;

(d) If an NBS Card does not reach the Public Health Laboratory within ten (10) days after the blood sample was drawn, the submitter shall repeat this process and submit a new Card for that baby.

(3) If the baby is admitted into a Neonatal Intensive Care Unit (NICU) or Special Care Nursery (SCN), the baby shall have up to three specimens collected in accordance with the current edition of the Georgia Newborn Screening Program Policy and Procedure Manual.

(4) The Department shall charge a fee of $80.40 per baby, for screening, patient retrieval and diagnosis, in order to meet or defray the Department's actual cost. However, no parent shall be denied screening on the basis of inability to pay.

(5) If the Department or approved laboratory determines that the specimen is unsatisfactory, then the submitter shall obtain a second specimen and submit another Card as soon as possible, but before the baby reaches three to four weeks of age. If the baby has been discharged, then the submitter shall be responsible for contacting the baby's physician, healthcare provider, or parent or legal guardian to arrange for the second specimen.

Cite as Ga. Comp. R. & Regs. R. 511-5-5-.04
Authority: O.C.G.A. §§ 31-2A-6, 31-12-5 through -7.
History. Original Rule entitled "Newborn Screening Specimen Cards and Laboratory Analysis" adopted. F. May 13, 2014; eff. June 2, 2014.
Amended: F. May 12, 2016; eff. June 1, 2016.
Amended: F. June 14, 2019; eff. July 15, 2019, as specified by the Agency.
Amended: F. Sep. 23, 2020; eff. Oct. 21, 2020, as specified by the Agency.

Rule 511-5-5-.05. Critical Congenital Heart Disease Screening.

(1) All hospitals and birthing centers shall be equipped to conduct a CCHD screening test on newborn babies in accordance with the Georgia Newborn Screening Program Policy and Procedure Manual.

(2) When a live birth occurs in any hospital, birthing center or in a facility that is equipped to conduct a CCHD screening test the test shall be conducted prior to the baby's discharge in accordance with the Georgia Newborn Screening Policy and Procedure Manual. Newborns who have already received an echocardiogram for any reason may be excluded from CCHD screening.

(3) If the baby is admitted into a NICU or SCN, the baby shall have a CCHD screening test prior to discharge or once the baby is weaned from supplemental oxygen. Newborns who have already received an echocardiogram for any reason may be excluded from CCHD screening.

(4) The person administering the test shall ensure that the CCHD screening test is conducted in accordance with the Georgia Newborn Screening Program Policy and Procedure Manual.

(5) The results of the test shall be included in the baby's clinical record, reported to the Department, and given to the parents or legal guardians, in accordance with the Georgia Newborn Screening Policy and Procedure Manual.

Cite as Ga. Comp. R. & Regs. R. 511-5-5-.05
Authority: O.C.G.A. 31-2A-6, 31-12-5 through -7.
History. Original Rule entitled "Critical Congenital Heart Disease Screening" adopted. F. May 13, 2014; eff. June 2, 2014.

Rule 511-5-5-.06. Hearing Screening.

(1) All hospitals and birthing centers shall be equipped to conduct a newborn hearing screening test in accordance with these Rules.

(2) When a live birth occurs in a hospital or birthing center or in an office or facility that is equipped to conduct a newborn hearing screening test according to these Rules, a newborn hearing screening test shall be conducted prior to the baby's discharge.

(3) A newborn hearing screening test shall be conducted in accordance with the Georgia Newborn Screening Program Policy and Procedure Manual as follows:

(a) If the baby is in the well-baby nursery, then the test shall be conducted by aOAE and/or aABR;

(b) If the baby is in a SCN or NICU, for greater than five days, then the test shall be conducted after 32 weeks gestational age and when the baby is medically stable, and must include an aABR;

(c) If the baby does not pass the initial newborn hearing screening test, then the submitter may perform a second newborn hearing screening test prior to hospital

discharge in accordance with the Georgia Newborn Screening Program Policy and Procedure Manual;

(d) In the event that a baby is transferred to another hospital or birthing center before the newborn hearing screening test has been completed, then it is the responsibility of the second facility to assure that a newborn hearing screening test is completed.

(4) The results of the test shall be included in the baby's clinical record, reported to the Department, and given to the parents or legal guardians along with any follow-up recommendations, in accordance with the Georgia Newborn Screening Policy and Procedure Manual.

Cite as Ga. Comp. R. & Regs. R. 511-5-5-.06
Authority: O.C.G.A. 31-2A-6, 31-12-5 through -7.
History. Original Rule entitled "Hearing Screening" adopted. F. May 13, 2014; eff. June 2, 2014.

Rule 511-5-5-.07. Approved Laboratories.

(1) A private laboratory may seek approval from the Department to conduct newborn screening laboratory analysis by showing to the Department's satisfaction that it holds a valid Certificate of Accreditation or Certificate of Registration from CMS to perform high-complexity testing of newborns for the conditions listed in DPH Rule 511-5-5-.03(c) through (gg), and that it can perform consistent and reliable testing in accordance with the Rules of the Department.

(2) Approved laboratories performing analysis of a Georgia Newborn Screening Specimen Card shall conduct testing for all of the conditions listed in DPH Rule 511-5-5-.03(c) through (gg) and shall report the results of the testing to the appropriate newborn screening follow-up provider and submitter on the day that testing is completed.

(3) Approved laboratories shall retain the Cards according to the retention schedule in the current Georgia Newborn Screening Program Policy and Procedure Manual.

Cite as Ga. Comp. R. & Regs. R. 511-5-5-.07
Authority: O.C.G.A. §§ 31-2A-6; 31-12-5 through -7; 31-22-2.
History. Original Rule entitled "Approved Laboratories" adopted. F. May 13, 2014; eff. June 2, 2014.
Amended: F. June 14, 2019; eff. July 15, 2019, as specified by the Agency.
Amended: F. Nov. 29, 2021; eff. Dec. 29, 2021, as specified by the Agency.

Rule 511-5-5-.08. Abnormal Test Results.

(1) In the event of an abnormal test result from the NBS Card, the appropriate newborn screening follow-up provider shall notify the baby's physician or healthcare provider, and the parent or legal guardian, in accordance with the Georgia Newborn Screening Policy and Procedure Manual.

(2) In the event of an abnormal test result for CCHD, an appropriate assessment or referral shall be made immediately, in accordance with the Georgia Newborn Screening Policy and Procedure Manual.

(3) In the event of a newborn not passing the newborn hearing screening test, the person administering the newborn hearing screening test shall notify the Department of Public Health (DPH) in accordance with the Georgia Newborn Screening Policy and Procedure Manual

(4) If the parents or legal guardians cannot be reached or are non-responsive, the Department or the parents' county health department should be contacted for assistance.

Cite as Ga. Comp. R. & Regs. R. 511-5-5-.08
Authority: O.C.G.A. 31-2A-6, 31-12-5 through -7.
History. Original Rule entitled "Abnormal Test Results" adopted. F. May 13, 2014; eff. June 2, 2014.

Rule 511-5-5-.09. Reporting.

Every hospital, laboratory and physician confirming abnormal test results or clinical symptoms for the conditions listed in DPH Rule 511-5-5-.03 must report those findings to the appropriate follow-up provider and to the Department in accordance with the Georgia Newborn Screening Policy and Procedure Manual.

Cite as Ga. Comp. R. & Regs. R. 511-5-5-.09
Authority: O.C.G.A. §§ 31-12-2; 31-1-3.2; 31-22-2.
History. Original Rule entitled "Reporting" adopted. F. May 13, 2014; eff. June 2, 2014.
Amended: F. Nov. 29, 2021; eff. Dec. 29, 2021, as specified by the Agency.

Rule 511-5-5-.10. Revisions to Newborn Screening Panel.

The Commissioner of Public Health may from time to time change the roster of conditions for which testing is required. In determining which conditions are to be added or deleted from the newborn screening panel, the Commissioner may seek the advice and guidance of the Newborn Screening and Genetics Advisory Committee. Criteria to be considered in adding disorders shall include, without limitation, the following:

(a) Whether the disorder has significant morbidity and mortality when not identified and not treated before symptoms appear;

(b) Whether early clinical identification of the disorder is unlikely;

(c) Whether the prevalence of the disorder in the population is frequent enough to justify screening an entire population;

(d) Whether appropriate and effective technology and trained personnel are available to perform the additional tests;

(e) Whether resources for follow-up and counseling are available;

(f) Whether resources and efficacious treatment are available; and

(g) Whether the disorder is recommended for screening by any national professional organization such as, but not limited to the Secretary's Advisory Committee on Heritable Disorders of Newborns and Children, The American Academy of Pediatrics and the National March of Dimes.

Cite as Ga. Comp. R. & Regs. R. 511-5-5-.10
Authority: O.C.G.A. 31-2A-6, 31-12-5 through -7.
History. Original Rule entitled "Revisions to Newborn Screening Panel" adopted. F. May 13, 2014; eff. June 2, 2014.

Subject 511-5-6. VISION, HEARING, DENTAL, AND NUTRITION SCREENING OF CHILDREN ENTERING PUBLIC SCHOOLS.

Rule 511-5-6-.01. Definitions.

(1) "Screening" means a preliminary standard evaluation designed to identify the need for further professional evaluation, with results reported as "passing" or "needs further evaluation" and an indication of whether the child is currently under professional care;

(2) "Certificate" means Department of Public Health Form 3300: Certificate of Vision, Hearing, Dental and Nutrition Screening, in the form attached to these Rules.

(3) "Department" means the Georgia Department of Public Health;

(4) "Public School" means a school operating within the State of Georgia and receiving direct financial support from a county Board of Education, the Georgia Department of Education, or the Georgia Department of Early Care and Learning;

(5) "Local Health Department" means a County Board of Health organized pursuant to O.C.G.A. § 31-3-1*et seq.*

Cite as Ga. Comp. R. & Regs. R. 511-5-6-.01
Authority: O.C.G.A. Sections 31-2A-4(2, 7, 8); 31-2A-6, 20-2-770.

History. Original Rule entitled "Definitions" adopted. F. May 22, 2013; eff. June 11, 2013.

Rule 511-5-6-.02. Filing of Certificates.

(1) The parent or guardian of a child being admitted for the first time to a public school shall furnish to the school authorities a properly executed Department of Public Health Form 3300: Certificate of Vision, Hearing, Dental and Nutrition Screening. The Certificate shall be subject to audit by the Department and by the local Health Department.

(2) The vision, hearing, dental, and nutrition screenings reported on the Certificate must have been conducted within one year prior to the time that the child is admitted for the first time to a public school.

(3) Any child admitted to a public school without a Certificate shall present a Certificate within three months following admission.

(4) When a child transfers to another school within Georgia, the Certificate and any related follow-up documentation must be forwarded to the new school.

Cite as Ga. Comp. R. & Regs. R. 511-5-6-.02
Authority: O.C.G.A. Sections 31-2A-4(2, 7, 8); 31-2A-6, 20-2-770.
History. Original Rule entitled "Filing of Certificates" adopted. F. May 22, 2013; eff. June 11, 2013.

Rule 511-5-6-.03. Screenings Required for Children Entering School.

(1) The following screenings shall be required for each child and reported on the Certificate: vision, hearing, dental, and nutrition.

(2) For purposes of the nutrition screening,"Body Mass Index" calculations shall be made using the current formula published by the Centers for Disease Control and Prevention.

Cite as Ga. Comp. R. & Regs. R. 511-5-6-.03
Authority: O.C.G.A. Sections 31-2A-4(2, 7, 8); 31-2A-6, 20-2-770.
History. Original Rule entitled "Screenings Required for Children Entering School" adopted. F. May 22, 2013; eff. June 11, 2013.

Rule 511-5-6-.04. Persons Authorized to Conduct Screenings.

(1) Vision, hearing, dental, and nutrition screenings may be conducted by a physician with an active Georgia license, by persons working under the supervision of a physician with an active Georgia license, by the local health department, or by a school registered nurse.

(2) Vision screenings also may be conducted by an optometrist with an active Georgia license, or by an employee of Prevent Blindness Georgia trained in vision screening.

(3) Hearing screenings also may be conducted by an audiologist or speech-language pathologist with an active Georgia license.

(4) Dental screenings also may be conducted by a dentist with an active Georgia license, or by a dental hygienist with an active Georgia license.

(5) Nutrition screenings also may be conducted by a dietician with an active Georgia license.

Cite as Ga. Comp. R. & Regs. R. 511-5-6-.04
Authority: O.C.G.A. Sections 31-2A-4(2, 7, 8); 31-2A-6, 20-2-770.
History. Original Rule entitled "Persons Authorized to Conduct Screenings" adopted. F. May 22, 2013; eff. June 11, 2013.

Rule 511-5-6-.05. Certificate for Child with a Disability or Health Condition that Precludes Taking or Passing a Screening.

If a disability or other health condition precludes a child from taking or passing any of the four screening components, then the person screening for that component shall explain on the Certificate why the test could not be administered or passed, note whether the child is under professional care, and provide any further information that might assist school authorities with the child's educational planning.

Cite as Ga. Comp. R. & Regs. R. 511-5-6-.05
Authority: O.C.G.A. Sections 31-2A-4(2, 7, 8); 31-2A-6, 20-2-770.
History. Original Rule entitled "Certificate for Child with a Disability or Health Condition that Precludes Taking or Passing a Screening" adopted. F. May 22, 2013; eff. June 11, 2013.

Rule 511-5-6-.06. Certificate for Child Exempt from Screenings.

For a child to be exempt from any screening on religious grounds, the parent or legal guardian must furnish the school a notarized statement stating that the required screening or screenings conflict with the religious beliefs of the parent or legal guardian. This notarized statement must be kept on file at the school and forwarded to new schools in the same manner as a Certificate.

Cite as Ga. Comp. R. & Regs. R. 511-5-6-.06
Authority: O.C.G.A. Sections 31-2A-4(2, 7, 8); 31-2A-6, 20-2-770.
History. Original Rule entitled "Certificate for Child Exempt from Screenings" adopted. F. May 22, 2013; eff. June 11, 2013.

Rule 511-5-6-.07. Certificate for Child Screened Outside of Georgia.

A local Health Department may, in its discretion, accept written records of screenings performed by private practitioners licensed in a State other than Georgia, provided that such screenings were conducted within one year prior to the time that the child is admitted for the first time to a Georgia public school. In such a case, the Health Department shall sign and issue a Certificate based upon the information in such written records, and shall keep such written records on file.

Cite as Ga. Comp. R. & Regs. R. 511-5-6-.07
Authority: O.C.G.A. Sections 31-2A-4(2, 7, 8); 31-2A-6, 20-2-770.
History. Original Rule entitled "Certificate for Child Screened Outside of Georgia" adopted. F. May 22, 2013; eff. June 11, 2013.

Rule 511-5-6-.08. Department of Public Health Form 3300.

(1) Department of Public Health Form 3300: Certificate of Vision, Hearing, Dental and Nutrition Screening shall be in the form attached to this Rule.

(2) School authorities may accept either the revised Form 3300 or the previous version of Form 3300 for children being admitted for the first time to public school during the 2013-4 school year. For the 2014-2015 school year and later years, only the revised Form 3300 attached to this Rule shall be accepted.

Cite as Ga. Comp. R. & Regs. R. 511-5-6-.08
Authority: O.C.G.A. Sections 31-2A-4(2, 7, 8); 31-2A-6, 20-2-770.
History. Original Rule entitled "Department of Public Health Form 3300" adopted. F. May 22, 2013; eff. June 11, 2013

Form (511-5-6) Georgia Department of Public Health Form 3300

Georgia Department of Public Health
Form 3300
Certificate of Vision, Hearing, Dental, and Nutrition Screening

FILE THIS FORM WITH THE SCHOOL WHEN YOUR CHILD IS FIRST ENROLLED IN A GEORGIA PUBLIC SCHOOL
SCREENER CONTACT INFORMATION IS REQUIRED
PLEASE SEE THE INSTRUCTIONS ON THE BACK OF THIS FORM

Child's Name: first middle last

Date of Birth: month day year

Gender: ? Male ? Female

Child's Home Address: street, city, state, zip code county

Parent/Guardian Name:

Parent/Guardian Contact Information:
Daytime phone number: Cell:
Evening phone number:

VISION
? Unable to screen (explain why below)
? Uses corrective lenses
? Worn for testing

? Passed (20/30 in each eye for age 6 and above, 20/40 in each eye for below age 6)
? Needs further evaluation
? Under professional care (explain below)

Screening completed by:
? Physician
? Local Health Department
? Optometrist
? "Prevent Blindness Georgia" employee
? School Registered Nurse

Screener's Signature **Date**
I certify that this child has received the above screening.
Contact Information:

HEARING
? Unable to screen (explain why below)
? Uses hearing aid / assistive device

? Passed at 500, 1000, 2000, and 4000 Hz with audiometer at 20 or 25 dB
? Needs further evaluation
? Under professional care (explain below)

Screening completed by:
? Physician
? Local Health Department
? Audiologist
? Speech-Language Pathologist
? School Registered Nurse

Screener's Signature **Date**
I certify that this child has received the above screening.
Contact Information:

DENTAL
? Unable to screen (explain why below)

? Normal appearance
? Needs further evaluation
? Emergency problem observed
? Under professional care (explain below)

Screening completed by:
? Physician
? Dentist
? Local Health Department Registered Nurse
? Registered Dental Hygienist
? School Registered Nurse

Screener's Signature **Date**
I certify that this child has received the above screening.
Contact Information:

NUTRITION
? Unable to screen (explain why below)

Height: _____ **Weight:** _____

BMI: _____ **BMI%:** _____
? 5th to 84th percentile - Appropriate for age
? < 5th percentile - Needs further evaluation
? = 85th percentile - Needs further evaluation
? Under professional care (explain below)

Screening completed by:
? Physician
? Local Health Department
? Registered Dietician
? School Registered Nurse

Screener's Signature **Date**
I certify that this child has received the above screening.
Contact Information:

FOR SCHOOL SYSTEM ONLY Follow up for further evaluation

	1st attempt	2nd attempt	Actions reported (if any)
Vision			
Hearing			
Dental			
Nutrition			

Student support services initiated on:

[DPH Form 3300 Rev. 2013]

Georgia Department of Public Health Form 3300
Certificate of Vision, Hearing, Dental, and Nutrition Screening

Who is required to file this Form 3300?

The parent or guardian of a child who is being admitted for the first time to a public school in Georgia must file a completed Form 3300 with the school when the child is enrolled.

What is the purpose of Form 3300?

Form 3300 is intended to make sure that every child in Georgia is screened for possible problems with their vision, hearing, teeth and nutrition. The earlier these problems are detected, the earlier parents can seek professional help for the child.

What screenings are required?

Four different screenings are required: vision, hearing, dental, and nutrition. All four screenings must be conducted and reported on the form before it can be filed with the school.

Who can conduct the screenings?

Your child's doctor is authorized to conduct all four screenings, as is your local health department. In addition, the vision screening can be conducted by a Georgia licensed optometrist, an employee of Prevent Blindness Georgia trained to conduct vision screening, or a school registered nurse; the hearing screening can be conducted by a Georgia licensed speech-language pathologist or audiologist, or a school registered nurse; the dental screening can be conducted by a Georgia licensed dentist, dental hygienist, or a school registered nurse; and the nutrition screening can be conducted by a Georgia licensed dietician or a school registered nurse. It is not necessary that the same person conduct all four screenings.

What does "BMI" and "BMI%" mean?

"BMI" means "body mass index." BMI is a way to describe how much a child weighs in relation to height. "BMI percentile" is a way to compare the child's body mass index to the body mass index of a healthy child. If the child's BMI is less than 5% or more than 84% of what is appropriate for his or her age and height, then the child should be taken to a doctor or dietician for a more detailed evaluation. For more information, visit the Centers for Disease Control and Prevention website on child and teen BMI at:

http://www.cdc.gov/healthyweight/assessing/bmi/childrens_bmi/about_childrens_bmi.html

What should a parent do if the "needs further evaluation" box is checked?

"Needs further evaluation" means that the child may have a problem. If the "needs further evaluation" box is checked, then the parent should take the child to a professional for a more detailed evaluation. Your doctor or local health department may be able to help, or recommend someone who can help.

What if a Form 3300 was previously filed for the child at another school?

It is only necessary to file the Form 3300 once. If the Form 3300 is filed at the child's first school, and the child later transfers to another school, then the original school is required to forward the Form 3300 to the new school.

Subject 511-5-7. REPORTS OF INDUCED TERMINATION OF PREGNANCY.

Rule 511-5-7-.01. Reporting Induced Termination of Pregnancy.

(1) Each induced termination of pregnancy which occurs in Georgia shall be reported directly to the Department of Public Health within ten days by the person in charge of the institution or clinic in which the termination was performed, the attending physician, or a designated representative. The Department shall establish and maintain an internet site through which the required information may be reported. The report shall contain such

statistical data as the Department may deem appropriate; provided, however, that the name of the patient shall not be reported.

(2) The Department shall establish and maintain an internet site through which the information required by O.C.G.A. §§ 31-9A-6 and 31-9B-3 may be reported. In addition to the reports required under subsection (1) of this Rule, all physicians performing induced terminations of pregnancy in a health facility licensed as an abortion facility by the Department of Community Health shall report directly to the Department of Public Health through that site and provide the information requested therein. Information for each calendar year shall be reported no later than February 28 of the following year.

(3) All information reported pursuant to this Rule shall be deemed confidential, except that the Department may in its discretion release such reports or data in de-identified form or for research purposes determined by the Department to have scientific merit. Under no circumstances may information reported pursuant to this Rule be released in such a manner as to possibly lead to the identification of any physician, institution, clinic, or patient involved in an induced termination or terminations.

Cite as Ga. Comp. R. & Regs. R. 511-5-7-.01
Authority: O.C.G.A. Sections 16-12-141.1; 31-2A-6; 31-5-5; 31-9A-6; 31-9B-3; 31-10-19, 31-12-2(a).
History. Original Rule entitled "Reporting Induced Termination of Pregnancy" adopted. F. Dec. 18, 2012; eff. Jan. 7, 2013.

Subject 511-5-8. SCREENING OF PUBLIC SCHOOL CHILDREN FOR SCOLIOSIS.

Rule 511-5-8-.01. Definitions.

Unless a different meaning is required by the context, the following terms as used in these Rules shall have the meaning hereinafter respectively ascribed to them

(a) "At Risk Population" means those children who are in the age group 10 through 15 years.

(b) "Department" means the Georgia Department of Public Health.

(c) "Health Authority" means the county boards of health or their authorized representatives.

(d) "School Authority" means the county and municipal boards of education or their authorized representatives.

(e) "Scoliosis" means a lateral curvature of the spinal column from the midline that may or may not include rotation or deformity of the vertebrae.

(f) "Screening Examination" means to pass through a standardized inspection or test approved by the Department.

Cite as Ga. Comp. R. & Regs. R. 511-5-8-.01
Authority: O.C.G.A. Secs. 31-2A-6, 20-2-772.
History. Original Rule entitled "Definitions" adopted. F. Oct. 15, 2013; eff. Nov. 4, 2013.

Rule 511-5-8-.02. Provision for Screening.

(1) The health authority in cooperation with the school authority shall provide screening of all public school children in the at risk population, except in cases where the child has been screened during the at risk time by a physician with an active Georgia license, or a person working under the supervision of a physician with an active Georgia license, the local health department, or a licensed school nurse, or in such cases where the parent or guardian of the child has objected in writing to the screening.

(2) The annual screening process will target a minimum of two grades occupied by the at risk population, recognizing that with their earlier maturation females should be screened in early adolescence.

Cite as Ga. Comp. R. & Regs. R. 511-5-8-.02
Authority: O.C.G.A. §§ 31-2A-6, 20-2-772.
History. Original Rule entitled "Provision for Screening" adopted. F. Oct. 15, 2013; eff. Nov. 4, 2013.
Amended: F. July 19, 2022; eff. Aug. 18, 2022, as specified by the Agency.
Amended: F. Nov. 2, 2022; eff. Dec. 2, 2022, as specified by the Agency.

Rule 511-5-8-.03. Written Notice.

(1) Parents or legal guardians shall receive written notification from the school authority two weeks prior to the dates on which screening is to occur during the school term.

(2) If parents or legal guardians object to the screening, they must notify the school authority in writing within five days of having received the screening notification.

(3) The school authority shall maintain a list of the childrens' names for whom parents or guardians have filed a written objection and shall make such names known to the health authority.

Cite as Ga. Comp. R. & Regs. R. 511-5-8-.03
Authority: O.C.G.A. Secs. 31-2A-6, 20-2-772.
History. Original Rule entitled "Written Notice" adopted. F. Oct. 15, 2013; eff. Nov. 4, 2013.

Rule 511-5-8-.04. Screening Examinations.

(1) The health authority shall use a standardized inspection or test approved by the Department.

(2) The health authority shall cause staff who will perform the screening examinations to attend training courses offered by the Department as such attendance is deemed necessary by the health authority.

(3) Volunteers may be utilized by the health authority to assist in the screening program provided that such persons successfully complete a training course provided by the health authority. The health authority shall certify such persons to the school authority as authorized to participate in the screening program.

Cite as Ga. Comp. R. & Regs. R. 511-5-8-.04
Authority: O.C.G.A. Secs. 31-2A-6, 20-2-772.
History. Original Rule entitled "Screening Examinations" adopted. F. Oct. 15, 2013; eff. Nov. 4, 2013.

Rule 511-5-8-.05. Screening Process.

(1) The health authority shall cause each eligible child to be screened.

(2) Children identified as having a possible spinal deformity by volunteers shall be rescreened by the health authority.

(3) The health authority, at its discretion, may conduct follow-up clinics, utilizing x-ray and physician evaluation.

(4) Parents or guardians shall be notified solely by the health authority if their child is identified, during the screening process, as having a possible spinal deformity. The health authority shall also recommend to the parents or guardians that they seek further professional attention for the child.

Cite as Ga. Comp. R. & Regs. R. 511-5-8-.05
Authority: O.C.G.A. §§ 31-2A-6, 20-2-772.
History. Original Rule entitled "Screening Process" adopted. F. Oct. 15, 2013; eff. Nov. 4, 2013.
Amended: F. July 19, 2022; eff. Aug. 18, 2022, as specified by the Agency.

Rule 511-5-8-.06. Records and Reports.

(1) The health authority shall submit or cause to be submitted an annual report to the Department. A copy of the annual report shall be provided to the appropriate school authority. The report shall be on forms provided by the Department.

(2) The health authority shall maintain the names of children screened and the results of their screening pursuant to the schedules developed under the Georgia Records Act.

Cite as Ga. Comp. R. & Regs. R. 511-5-8-.06
Authority: O.C.G.A. Secs. 31-2A-6, 20-2-772.
History. Original Rule entitled "Records and Reports" adopted. F. Oct. 15, 2013; eff. Nov. 4, 2013.

Subject 511-5-9. SHARPS INJURY PREVENTION.

Rule 511-5-9-.01. Purpose.

The purpose of these rules is to address the problem of needlesticks and other sharps injuries resulting in bloodborne pathogen exposure incidents. Changes in bloodborne disease trends have been reported, and engineering controls have been developed and made available, all of which impact the health and safety of employees. The requirements in these rules for procedures and engineering and work practice controls provide a clear assignment to employers to address the use of sharps injury prevention technology.

Cite as Ga. Comp. R. & Regs. R. 511-5-9-.01
Authority: O.C.G.A. Secs. 31-2A-6, 31-12-13.
History. Original Rule entitled "Purpose" adopted. F. Oct. 18, 2013; eff. Nov. 7, 2013.

Rule 511-5-9-.02. Scope and Application.

These rules apply to public employers and employees in Georgia as defined by O.C.G.A. Section 31-12-13(a)(6) and (7).

Cite as Ga. Comp. R. & Regs. R. 511-5-9-.02
Authority: O.C.G.A. Secs. 31-2A-6, 31-12-13.
History. Original Rule entitled "Scope and Application" adopted. F. Oct. 18, 2013; eff. Nov. 7, 2013.

Rule 511-5-9-.03. Definitions.

(1) "Bloodborne pathogens" means pathogenic microorganisms that are present in human blood and can cause disease in humans. These pathogens include, but are not limited to, hepatitis B virus (HBV), hepatitis C virus (HCV) and human immunodeficiency virus (HIV).

(2) "Engineered sharps injury protection" means either:

(a) A physical attribute built into or used with a needle device used for withdrawing body fluids, accessing a vein or artery, or administering medications or other fluids, which effectively reduces the risk of an exposure incident by a mechanism

such as barrier creation, blunting, encapsulation, withdrawal, retraction, destruction, or other effective mechanisms; or

(b) a physical attribute built into or used with any other type of needle device or into a nonneedle sharp, which effectively reduces the risk of an exposure incident.

(3) "Exposure incident" means any sharps injury which may reasonably have exposed the person so injured to another person's blood or other material potentially containing bloodborne pathogens.

(4) "Front-line health care workers" means workers from a variety of occupational classifications and departments, including, but not limited to, registered professional nurses, nurse aids, medical technicians, phlebotomists, and physicians.

(5) "Needleless system" means a device that does not utilize needles for:

(a) The withdrawal of body fluids after initial venous or arterial access is established;

(b) The administration of medication or fluids; or

(c) Any other procedure involving the potential for an exposure incident.

(6) "Public employee" means an employee of a county board of health established in accordance with Chapter 3 of Title 31 or an employee of the state or an agency or authority of the state employed in a public health care facility or other facility providing health care related services, currently not subject to the jurisdiction of the federal Occupational Safety and Health Administration.

(7) "Public employer" means each employer having any public employee with occupational exposure to blood or other material potentially containing bloodborne pathogens.

(8) "Sharp" means any object used or encountered in a health care setting that can be reasonably anticipated to penetrate the skin or any other part of the body and to result in an exposure incident, including, but not limited to, needle devices, scalpels, lancets, broken glass, and broken capillary tubes, but does not include prefilled syringes or other drugs or biologics prepackaged with an administration system requiring federal Food and Drug Administration approval for changes to packaging, labeling or product.

(9) "Sharps injury" means any injury caused by a sharp, including, but not limited to, cuts, abrasions, or needlesticks.

(10) "Sharps injury log" means a written or electronic record satisfying the requirements of Rule 511-5-9-.07.

Cite as Ga. Comp. R. & Regs. R. 511-5-9-.03
Authority: O.C.G.A. Secs. 31-2A-6, 31-12-13.

History. Original Rule entitled "Definitions" adopted. F. Oct. 18, 2013; eff. Nov. 7, 2013.

Rule 511-5-9-.04. Evaluation Committee.

Each Public Health District shall establish and maintain an evaluation committee (at least 50% of which are front-line health care workers) to advise the employer on the implementation of the requirements in these standards. Committee members shall be trained in the proper method of utilizing product evaluation criteria, prior to the commencement of any product evaluation. Each employer will have the option of using the Public Health District evaluation committee or establishing and maintaining an evaluation committee of their own that meets these standards.

Cite as Ga. Comp. R. & Regs. R. 511-5-9-.04
Authority: O.C.G.A. Secs. 31-2A-6, 31-12-13.
History. Original Rule entitled "Evaluation Committee" adopted. F. Oct. 18, 2013; eff. Nov. 7, 2013.

Rule 511-5-9-.05. Exposure Control Plan.

Each Public Health District shall develop and implement an effective written exposure control plan that includes, but is not limited to, procedures for a) identifying and selecting needleless systems and sharps with ESIP through an appropriate evaluation committee and b) updating the written exposure control plan when necessary to reflect progress in implementing needleless systems and sharps with ESIP as determined by the evaluation committee but no less than once a year. Each employer will have the option of using the Public Health District plan or a plan of their own that meets these standards.

Cite as Ga. Comp. R. & Regs. R. 511-5-9-.05
Authority: O.C.G.A. Secs. 31-2A-6, 31-12-13.
History. Original Rule entitled "Exposure Control Plan" adopted. F. Oct. 18, 2013; eff. Nov. 7, 2013.

Rule 511-5-9-.06. Engineering and Work Practice Controls.

The most effective available needleless systems and sharps with engineered sharps injury protection (ESIP) shall be included as engineering and work practice controls in each facility. Two exceptions are when no such devices or systems are available in the marketplace and when the appropriate evaluation committee (consisting of =50% front-line health care workers) determines by objective product evaluation criteria that use of such devices will jeopardize patient or employee safety with regard to a specific medical procedure. Employers shall ensure that all front-line health care workers are trained on the use of all engineering controls before they are introduced into the clinical setting.

Cite as Ga. Comp. R. & Regs. R. 511-5-9-.06
Authority: O.C.G.A. Secs. 31-2A-6, 31-12-13.
History. Original Rule entitled "Engineering and Work Practice Controls" adopted. F. Oct. 18, 2013; eff. Nov. 7,

2013.

Rule 511-5-9-.07. Sharps Injury Log.

Information concerning exposure incidents shall be recorded in a sharps injury log including but not limited to:

(a) date and time of exposure incident;

(b) type and brand of sharp involved in the exposure incident;

(c) description of the exposure incident;

(d) job classification of the exposed employee;

(e) department or work area where the incident occurred;

(f) procedure that the exposed employee was performing at the time of the incident;

(g) how the incident occurred;

(h) body part involved in the incident;

(i) if the sharp had ESIP, whether the protective mechanism was activated, and whether the injury occurred before the protective mechanism was activated, during activation of the mechanism, or after activation of the mechanism, if applicable;

(j) if the sharp had no ESIP, the injured employee's opinion as to whether and how such a mechanism could have prevented the injury, as well as the basis for the opinion;

(k) the employee's opinion about whether any other engineering, administrative, or work practice control could have prevented the injury, as well as the basis for the opinion.

Cite as Ga. Comp. R. & Regs. R. 511-5-9-.07
Authority: O.C.G.A. Secs. 31-2A-6, 31-12-13.
History. Original Rule entitled "Sharps Injury Log" adopted. F. Oct. 18, 2013; eff. Nov. 7, 2013.

Rule 511-5-9-.08. Availability of List.

The Department shall compile and maintain a list of existing needleless systems and sharps with ESIP, which shall be available to assist employers in complying with the requirements of these standards. The list will provide initial information so that potential users can conduct their own evaluations and make their own determinations as to the suitability of any particular device for use in their work environments.

Cite as Ga. Comp. R. & Regs. R. 511-5-9-.08
Authority: O.C.G.A. Secs. 31-2A-6, 31-12-13.
History. Original Rule entitled "Availability of List" adopted. F. Oct. 18, 2013; eff. Nov. 7, 2013.

Rule 511-5-9-.09. Additional Considerations.

The Department shall consider additional enactments as part of the bloodborne pathogen standard to prevent sharps injuries or bloodborne pathogen exposure incidents including, but not limited to, training and educational requirements, measures to increase vaccinations, strategic placement of sharps containers as close to the work area as practical, and increased use of personal protective equipment.

Cite as Ga. Comp. R. & Regs. R. 511-5-9-.09
Authority: O.C.G.A. Secs. 31-2A-6, 31-12-13.
History. Original Rule entitled "Additional Considerations" adopted. F. Oct. 18, 2013; eff. Nov. 7, 2013.

Subject 511-5-10. CANCER STATE AID PROGRAM.

Rule 511-5-10-.01. Criteria for Certification as Cancer Treatment Facility.

Hospitals, free-standing radiation and physician group practices or medical treatment centers must be certified each state fiscal year by the Department of Public Health to be eligible for reimbursements for active cancer treatment provided to eligible enrolled patients. These categories of medical providers are considered to be "facilities" for the purposes of program participation.

To be eligible for Cancer State Aid (CSA) certification, treatment facilities must complete and submit a signed participation contract or agreement and required documentation, and meet the appropriate requirements as listed by type of facility:

1) Hospitals:
   a) The hospital must be licensed by the State of Georgia.
   b) The hospital must be accredited by the Joint Commission on Accreditation of Healthcare Organizations or by another Centers for Medicare and Medicaid Services (CMS) accepted accreditation organization.

2) Free-standing radiation therapy centers:

   Free-standing radiation therapy centers must be licensed by the State of Georgia and must be in compliance with provisions stated in the annual Cancer State Aid participation agreement.

3) Physician group practices or medical treatment centers that provide cancer treatment services on an out-patient basis:

   Physician group practices or medical treatment centers must be in compliance with provisions stated in the annual Cancer State Aid participation agreement.

Cite as Ga. Comp. R. & Regs. R. 511-5-10-.01
Authority: O.C.G.A. §§ 31-2A-6, 31-15-5.
History. Previously rule 290-5-10-.01.
Adopted: Original Rule entitled "Criteria for Certification as Cancer Treatment Facility" adopted. F. Apr 11, 2012; eff. May 1, 2012.

Rule 511-5-10-.02. Cancer State Aid Program Patient Enrollment.

Participating facilities shall assist the patient in completing a Cancer State Aid enrollment application, and shall submit the application, related forms and supporting documentation of eligibility criteria on behalf of the patient to the Cancer State Aid Program, Office of Cancer Screening and Treatment, Health Promotion and Disease Prevention Program, Department of Public Health.

Cite as Ga. Comp. R. & Regs. R. 511-5-10-.02
Authority: O.C.G.A. Secs. 31-2A-6, 31-15-5.
History. Previously rule 290-5-10-.02. Original Rule entitled "Cancer State Aid Program Patient Enrollment" adopted. F. Apr. 11, 2012; eff. May 1, 2012.

Rule 511-5-10-.03. Eligibility Requirements for Cancer State Aid Patients.

1) Eligibility for program enrollment is determined at the time of application by the Cancer State Aid Program of the Department of Public Health.
   a) Each patient must apply for program enrollment each state fiscal year.
   b) Payment for treatment and evaluation is limited to currently available program funds.

2) State Residency Criteria

   Applicants must be Georgia residents at the time of application. A resident is anyone who is living in Georgia voluntarily with the intention of making Georgia his or her permanent home.

3) Legal Residency Criteria

An applicant must be United States citizen; a legal permanent resident; or a qualified alien or nonimmigrant under the federal Immigration and Nationality Act, Title 8 United States Code, and lawfully present in the United States, in which case the applicant must provide the alien number assigned by the United States Department of Homeland Security.

4) Medical Criteria

   a) Patients shall have medical documentation of a cancer diagnosis, or symptoms or physical findings that have been medically evaluated, documented, and determined to create a high suspicion of cancer.

   b) Patients who are referred with a presumptive diagnosis of cancer will be accepted for only those procedures necessary to establish a cancer diagnosis. Once those procedures are complete, staging of the confirmed cancer diagnosis must be determined and a report submitted to the Cancer State Aid Program.

   c) If the diagnosis is found to be non-malignant, the financial obligation of the State ceases and no further medical expenses may be paid with Cancer State Aid funds.

   d) Patients who are no longer receiving cancer treatment, and whose care is limited to supportive care only, are ineligible.

5) Financial Criteria

   Financial eligibility will be determined by the Cancer State Aid program and is based upon family size, annual income, other assets, and ongoing and outstanding medical expenses.

Cite as Ga. Comp. R. & Regs. R. 511-5-10-.03
Authority: O.C.G.A. Secs. 31-2A-6, 31-15-5.
History. Previously rule 290-5-10-.03. Original Rule entitled "Eligibility Requirements for Cancer State Aid Patients" adopted. F. Apr. 11, 2012; eff. May 1, 2012.

Rule 511-5-10-.04. Health Insurance.

Applicants who have health insurance that covers the cost of cancer treatment are not eligible for Program enrollment.

Cite as Ga. Comp. R. & Regs. R. 511-5-10-.04
Authority: O.C.G.A. Secs. 31-2A-6, 31-15-5.
History. Previously rule 290-5-10-.04. Original Rule entitled "Health Insurance" adopted. F. Apr. 11, 2012; eff. May 1, 2012.

Rule 511-5-10-.05. Periodic review of eligibility.

Interim financial reviews with families shall be conducted when there are significant changes in family circumstances or employment that could affect the patient's eligibility.

Cite as Ga. Comp. R. & Regs. R. 511-5-10-.05
Authority: O.C.G.A. Secs. 31-2A-6, 31-15-5.
History. Previously rule 290-5-10-.05. Original Rule entitled "Periodic review of eligibility" adopted. F. Apr. 11, 2012; eff. May 1, 2012.

Rule 511-5-10-.06. Application Termination.

The Cancer State Aid Program shall terminate a patient's enrollment when:

1) The patient no longer meets the criteria for financial and/or medical eligibility.

2) There has been a willful misstatement of fact or material omission on the patient application, including but not limited to facts concerning income or resources.

3) Patient fails to comply with the Program's policies and procedures.

4) Patient becomes eligible for another source of funding.

Cite as Ga. Comp. R. & Regs. R. 511-5-10-.06
Authority: O.C.G.A. Secs. 31-2A-6, 31-15-5.
History. Previously rule 290-5-10-.06. Original Rule entitled "Application Termination" adopted. F. Apr. 11, 2012; eff. May 1, 2012.

Rule 511-5-10-.07. Reimbursement of Cost.

Based on the guidelines outlined below, reimbursement shall be made for standard diagnostic evaluation, cancer treatment, and facility costs incurred to provide oncology care to enrolled patients.

1) Upon patient enrollment, participating facilities may submit claims for services provided within 90 days prior to the Program's receipt of the patient application.

2) The Program may consider payment of additional outstanding oncology service claims based upon available funds.

3) Payment for medications is based upon current program policies, available funds and facility agreements.

4) No reimbursement will be made to any facility for any services provided prior to the Department's signature date on the Cancer State Aid participation agreement.

5) Cancer State Aid patients shall not be billed for eligible cancer related services provided to the patient during their enrollment period for the fiscal year, up to the established Program maximums or the amount assigned for the patient's care by the Program.

   a) It is the responsibility of the facility to submit all claims for payment within 60 days of the date of treatment.

   b) Claims received after the 60 day requirement are not eligible for Cancer Sate Aid payment and may not be billed to the patient.

   c) At the discretion of the Cancer State Aid Program denied claims may be paid provided funds are available and the Program does not have a waiting list for program enrollment.

6) Hospitals

   Participating hospitals must provide the most recent independent certified audit. The audit documents the facility's total expenses and total patient charges. The ratio of these expenses and charges is used to establish the percent of billed charges that will be reimbursed for the current state fiscal year by the Cancer State Aid Program. This number is referred to as the reimbursement percentage.

   Hospitals are reimbursed at 100% of the calculated reimbursement percentage up to the allowed Cancer State Aid maximums per enrollment year.

   The Cancer State Aid Program shall determine limitations on payment for services based on available funding for the fiscal year in which the patient is approved.

   Whenever possible, care should be provided in the most cost effective setting.

   Hospice care is not eligible for Cancer State Aid reimbursement.

7) Free-Standing Radiation Therapy Centers

   a) Reimbursement of cost shall be made up to the current fiscal year maximum determined by the Program for this provider category, and for procedures as defined in the participation agreement.

8) Physician Group Practices or Medical Treatment Centers

   a) Reimbursement shall be made for diagnostic services for suspected cancers, cancer treatment services, and evaluation and management services related to cancer care provided on an outpatient basis only.

   b) Reimbursement of cost shall be made up to the current fiscal year maximums determined by the Program for this provider category, and for procedures as defined in the participation agreement.

9) Other or Special Vendors

   Pharmacies, home health and medical suppliers must have a current signed and approved Cancer State Aid statement of participation/agreement.

Cite as Ga. Comp. R. & Regs. R. 511-5-10-.07
Authority: O.C.G.A. Secs. 31-2A-6, 31-15-5.
History. Previously rule 290-5-10-.07. Original Rule entitled "Reimbursement of Cost" adopted. F. Apr. 11, 2012; eff. May 1, 2012.

Rule 511-5-10-.08. Refunds of reimbursements for ineligible patients.

1) Reimbursements made by Cancer State Aid to participating facilities for a patient later found to be ineligible for Cancer State Aid benefits must be refunded.

2) Such refunds shall be made within 45 days of receipt of written notification of a "request for refund" from the Cancer State Aid Program.

3) CSA may withhold all payments due to a facility or any other medical provider until such refunds are received.

Cite as Ga. Comp. R. & Regs. R. 511-5-10-.08
Authority: O.C.G.A. Secs. 31-2A-6, 31-15-5.
History. Previously rule 290-5-10-.08. Original Rule entitled "Refunds of reimbursements for ineligible patients" adopted. F. Apr. 11, 2012; eff. May 1, 2012.

Rule 511-5-10-.09. Reconsideration of eligibility and claims decisions.

1) Patients, referring physicians, and other providers who are dissatisfied with the initial determination of the patient's eligibility for the Cancer State Aid Program may request reconsideration.

2) Patients, referring physicians, hospitals, or other providers dissatisfied with a payment limitation or denial may request reconsideration.

3) A request for initial reconsideration must be made in writing to the Program Director - Cancer State Aid Program, Department of Public Health. The request must be submitted within 30 days of the initial denial and should include a complete description and supporting scientific medical or financial information documenting reasons that the initial medical or financial determination was incorrect, or an exception to the payment limitation should be made.

4) Requests for second reconsideration shall be forwarded to the Office of General Counsel, along with any reply that the Program deems appropriate, for an independent and impartial determination of whether the Program's decision was supported by the facts and made in accordance with the law and these regulations.

5) The decision of the Office of General Counsel shall be final.

Cite as Ga. Comp. R. & Regs. R. 511-5-10-.09
Authority: O.C.G.A. Secs. 31-2A-6, 31-15-5.
History. Previously rule 290-5-10-.09. Original Rule entitled "Reconsideration of eligibility and claims decisions" adopted. F. Apr. 11, 2012; eff. May 1, 2012.

Subject 511-5-11. LOW THC OIL PATIENT REGISTRY.

Rule 511-5-11-.01. Definitions.

(1) "**Cardholder**" means the person identified on a "Low THC Oil Permit" as being authorized to possess low THC oil. A cardholder may be an eligible patient or a caregiver.

(2) " **Caregiver**" means the parent or legal guardian of an eligible patient, including but not limited to a person authorized by the Division of Family and Children's Services of the Department of Human Services to care for a foster child.

(3) " **Department**" means the Georgia Department of Public Health;

(4) " **Eligible patient**" means a resident of Georgia who has been certified by a physician licensed by and in good standing with the Georgia Composite Medical Board as having one of the following conditions:

(a) Cancer, when such diagnosis is end stage or the treatment produces related wasting illness, recalcitrant nausea and vomiting;

(b) Amyotrophic lateral sclerosis, when such diagnosis is severe or end stage;

(c) Seizure disorders related to diagnosis of epilepsy or trauma related head injuries;

(d) Multiple sclerosis, when such diagnosis is severe or end stage;

(e) Crohn's disease;

(f) Mitochondrial disease;

(g) Parkinson's disease, when such diagnosis is severe or end stage; or

(h) Sickle cell disease, when such diagnosis is severe or end stage;

(5) **" Low THC Oil"** means an oil that contains not more than 5% by weight of tetrahydrocannabinol and an amount of cannabidiol equal to or greater than the amount of tetrahydrocannabinol;

(6) **" Low THC Oil Patient Registry**" means the database maintained by the Department of all eligible patients and their caregivers on whose behalf applications for a Low THC Oil Permit have been submitted and approved by the Department;

(7) **" Low THC Oil Permit**" means a durable card issued by the Department to eligible patients or their caregivers authorizing the possession of up to up to 20 fluid ounces of low THC oil for use by an eligible patient.

(8) **" Physician**" means a person licensed to practice medicine by and in good standing with the Georgia Composite Medical Board pursuant to Article 2 of Chapter 34 of Title 43.

Cite as Ga. Comp. R. & Regs. R. 511-5-11-.01
Authority: O.C.G.A. Secs. 16-12-190, 31-2A-6, 31-2A-18.
History. Original Rule entitled "Definitions" adopted. F. July 24, 2015; eff. August 13, 2015.

Rule 511-5-11-.02. Low THC Oil Patient Registry.

(1) The Department shall maintain a database of eligible patients and their caregivers, and shall periodically review the database to delete the names of eligible patients and caregivers whose authorization has expired or who have become deceased.

(2) All applications for and information stored in the Low THC Oil Registry shall be confidential except as follows:

   (a) Upon request by a peace officer or prosecuting attorney, the Department shall confirm or deny that a particular individual appears in the Low THC Oil Patient Registry as a cardholder;

   (b) Information in the Low THC Oil Registry may be shared with the Georgia Composite Medical Board to assist in the preparation of the quarterly reports required by Code Section 31-2A-18(e);

   (c) An individual or caregiver registered with the Department under this Rule may request information pertaining to their application and permit.

Cite as Ga. Comp. R. & Regs. R. 511-5-11-.02
Authority: O.C.G.A. Secs. 31-2A-6, 31-2A-18, 31-5-5, 31-12-2(a).
History. Original Rule entitled "Low THC Oil Patient Registry" adopted. F. July 24, 2015; eff. August 13, 2015.

Rule 511-5-11-.03. Applications for the Low THC Oil Patient Registry.

(1) The Department shall establish and maintain an internet portal through which physicians may submit applications for the Low THC Oil Registry on behalf of their patients and their patients' caregivers.

(2) The Department shall require such information as may be determined by the Georgia Composite Medical Board, including but not limited to the following:

(a) Name, address, and date of birth of the patient;

(b) Name, address, and Georgia license number of the physician providing the certification;

(c) The medical condition or conditions that make the patient eligible for the Low THC Oil Registry;

(d) How long the patient has been a resident of Georgia;

(e) Whether the certifying physician has a doctor-patient relationship with the patient; and

(f) Whether the certifying physician is treating the patient for the medical condition or conditions that make the patient eligible for the Low THC Oil Registry.

(3) A physician's certification of a patient for the Low THC Oil Registry shall not constitute a prescription.

Cite as Ga. Comp. R. & Regs. R. 511-5-11-.03
Authority: O.C.G.A. Secs. 31-2A-6, 31-2A-18.
History. Original Rule entitled "Application for the Low THC Oil Patient Registry" adopted. F. July 24, 2015; eff. August 13, 2015

Rule 511-5-11-.04. Issuance of Low THC Oil Permits.

(1) The Department shall print and issue a Low THC Oil Permit upon receipt and review of an application certified by the patient's physician and showing eligibility as provided by law. The permit shall be valid for two years from issuance or the death of the cardholder, whichever happens first.

(2) A permit may be renewed only by submission of an application certified by a physician and meeting all the requirements of a new application.

(3) Permits shall be mailed to the Local Registrar of the applicant's county, and shall be released upon presentation of the applicant's secure and verifiable identification by the applicant or his or her designee.

(4) The fee for a Low THC Oil Permit shall be $25.

(5) Replacements for an unexpired Low THC Oil Permit that has been lost or damaged may be ordered by the certifying physician. The fee for a replacement permit shall be $25.

Cite as Ga. Comp. R. & Regs. R. 511-5-11-.04
Authority: O.C.G.A. Secs. 31-2A-6, 31-2A-18.
History. Original Rule entitled "Issuance of Low THC Oil Permits" adopted. F. July 24, 2015; eff. August 13, 2015.

Subject 511-5-12. DONATED DRUG REPOSITORY PROGRAM.

Rule 511-5-12-.01. Definitions.

As used in this Chapter, the term:

(1) "**Controlled substance**" means a drug, substance, or immediate precursor in Schedules I through V of Code Sections 16-13-25 through 16-13-29 and Schedules I through V of 21 CFR Part 1308.

(2) "**Donor**" shall mean any person, including an individual member of the public, or any entity legally authorized to possess drugs with a license or permit in good standing in the state in which it is located, including but not limited to a wholesaler or distributor, third party logistic providers, pharmacy, dispenser, clinic, surgical or health center, detention and rehabilitation centers, laboratory, medical or pharmacy school, prescriber or other health care professional, or healthcare facility. Donor shall also mean government agencies and entities that are federally authorized to possess drugs including but not limited to drug manufacturers, repackagers, relabelers, outsourcing facilities, Veteran Affairs hospitals, and prisons.

(3) "**Drugs"** means both prescription and non-prescription ("over-the-counter") drugs.

(4) "**Eligible patient**" means an indigent person; provided, however, that if the recipient's supply of donated drugs exceed the need for donated drugs by indigent patients, then any other person in need of a particular drug can be an eligible patient.

(5) "**Eligible recipient**" means a pharmacy, wholesaler, reverse distributor, hospital, federally qualified health center, nonprofit clinic, healthcare facility, an entity participating in a drug donation or repository program pursuant to another state's law, or private office of a healthcare professional which has been authorized by the Office of Pharmacy of the Department of Public Health as provided in DPH Rule 511-5-12-.04.

(6) "**Healthcare facility**" means a facility licensed by the Georgia Department of Community Health in accordance with Title 31, Chapter 7 as a:

(a) Nursing home;

(b) Personal care home;

(c) Assisted living community;

(d) Residential care facility for the elderly;

(e) Hospice;

(f) Hospital;

(g) Home health agency; or

(h) A similar entity licensed in the state in which it is located.

(7) "**Health care professional**" means a person who is licensed by the State of Georgia to practice as a:

(a) Physician;

(b) Registered nurse or licensed practical nurse;

(c) Physician assistant;

(d) Dentist or dental hygienist;

(e) Optometrist; or

(f) Pharmacist

(8) "**Indigent patient**" means a patient whose income is at or below the income eligibility requirements of the Georgia Medicaid program, or who is uninsured, underinsured, or enrolled in a public assistance health benefits program.

(9) "**Program**" means the donated drug repository program established by this Department pursuant to Code Section 31-8-301.

(10) "**Transaction date**" means the date on which ownership of the drugs is transferred between two participants of the program as established by contract or other arrangement. If no such contract or arrangement exists, the transaction date shall be the date the drug was accepted into inventory by the recipient.

Cite as Ga. Comp. R. & Regs. R. 511-5-12-.01
Authority: §§ 31-2A-6, 31-8-304.
History. Original Rule was filed as Emergency Rule 511-5-12-0.1-.01 on January 3, 2017; effective January 1, 2017, to remain in effect for a period of 120 days or until the effective date of a permanent Rule covering the same subject matter superseding this Emergency Rule is adopted, as specified by the Agency.
Adopted: Permanent Rule entitled "Definitions." F. Feb. 14, 2017; eff. Mar. 6, 2017.

Rule 511-5-12-.02. Authority and waivers.

(1) A donor or eligible recipient may request a waiver or variance from the Department with regard to any regulation related to this program in accordance with DPH Rule 511-1-1-.05. Notwithstanding DPH Rule 511-1-1-.05(2)(a), a donor or eligible recipient may request a waiver or variance from any provision of Title 31, Chapter 8, Article 10, upon a showing that such action would be in the interest of public health and safety.

(2) Pursuant to Code Section 31-8-304, this Department and its rules have sole regulatory authority over the program. Notwithstanding any other administrative regulation, including but not limited to Ga. R. &Regs.

(a) 480-10-.17, 480-24-.05(2)(b), and 480-24-.06, a person or entity may dispose of an eligible drug by donating it to an eligible recipient in accordance with the rules of this program.

(b) 480-10-.21 and 480-16-.08, an eligible recipient including but not limited to a pharmacy may receive drugs from a donor as defined in 511-5-12-.01(2) in accordance with the rules of this program.

(c) 480-7-.03(7)(e)(1), an eligible recipient may accept donated drugs that are in tamper-evident packaging in accordance with DPH Rule 511-5-12-.03(1)(b), including but not limited to drugs that have a tamper-evident seal on either their immediate, outer, secondary, or shipping container.

(d) 480-7.02(1)(d), an eligible recipient, including but not limited to a pharmacy, may receive, accept, replenish, repackage, and store donated drug samples in accordance with the rules of this program.

Cite as Ga. Comp. R. & Regs. R. 511-5-12-.02
Authority: §§ 31-2A-6, 31-8-304.
History. Original Rule was filed as Emergency Rule 511-5-12-0.1-.02 on January 3, 2017; effective January 1, 2017, to remain in effect for a period of 120 days or until the effective date of a permanent Rule covering the same subject matter superseding this Emergency Rule is adopted, as specified by the Agency.
Adopted: Permanent Rule entitled "Authority and waivers." F. Feb. 14, 2017; eff. Mar. 6, 2017.

Rule 511-5-12-.03. Eligible drugs.

(1) Drugs shall only be dispensed pursuant to the program if:

(a) For prescription drugs, they do not expire before the completion of the medication by the eligible patient based on the prescribing health care professional's directions for use and, for over-the-counter drugs, they do not expire before use by the eligible patient based on the directions for use on the manufacturer's label; and

(b) The drugs were donated in unopened tamper-evident packaging as defined by United States Pharmacopeia General Chapter 659, Packaging and Storage Requirements, including but not limited to unopened unit-dose and multiple-dose packaging.

(2) The following drugs shall not be donated to the program:

(a) Controlled substances;

(b) Drugs subject to a federal Food and Drug Administration managed risk evaluation and mitigation strategy pursuant to 21 U.S.C. Section 355-1 if inventory transfer is prohibited by such strategy; or

(c) Drugs that there is reason to believe are adulterated pursuant to Code Section 26-3-7.

Cite as Ga. Comp. R. & Regs. R. 511-5-12-.03
Authority: §§ 31-2A-6, 31-8-304.
History. Original Rule was filed as Emergency Rule 511-5-12-0.1-.03 on January 3, 2017; effective January 1, 2017, to remain in effect for a period of 120 days or until the effective date of a permanent Rule covering the same subject matter superseding this Emergency Rule is adopted, as specified by the Agency.
Adopted: Permanent Rule entitled "Eligible drugs." F. Feb. 14, 2017; eff. Mar. 6, 2017.

Rule 511-5-12-.04. Eligible recipients.

(1) A pharmacy, hospital, wholesaler, reverse distributor, federally qualified health center, nonprofit clinic, healthcare facility, an entity participating in a drug donation or repository program pursuant to another state's law, or healthcare professional that is otherwise legally authorized to possess prescription drugs may become an eligible recipient for a period of one year by giving written notice to the Office of Pharmacy of the Department of Public Health. That notice shall serve as authority for the recipient to participate in the program for a period of one year, unless revoked by the Department. An eligible recipient may renew its authority by sending written notice in subsequent years.

(2) The Department of Public Health shall publish on its website the list of authorized recipients.

(3) An entity which chooses to participate in the program shall comply with this Chapter, and shall make all records available for audit by this Department within five business days. Failure to comply with any provision of this Chapter or statutes governing prescription drugs may result in revocation of authority to participate in the program. Such revocation shall be provided as a written notice to the recipient and shall include the specific requirements that were violated and the corrective actions necessary for the recipient to reinstate its authority to participate in the program.

Cite as Ga. Comp. R. & Regs. R. 511-5-12-.04
Authority: O.C.G.A. §§ 31-2A-6, 31-8-304.
History. Original Rule was filed as Emergency Rule 511-5-12-0.1-.04 on January 3, 2017; effective January 1, 2017, to remain in effect for a period of 120 days or until the effective date of a permanent Rule covering the same subject matter superseding this Emergency Rule is adopted, as specified by the Agency.
Adopted: Permanent Rule entitled "Eligible recipients." F. Feb. 14, 2017; eff. Mar. 6, 2017.

Rule 511-5-12-.05. Receipt, storage, and handling of donated drugs by an eligible recipient.

(1) A donor may donate drugs to an eligible recipient.

(2) An eligible recipient may receive, accept, donate, dispose, replenish, and store drugs that were either donated or repackaged as provided in paragraph (6) of this Rule.

(3) Prior to the first donation from a new donor, a recipient must verify and record the following:

(a) The donor meets the definition provided in DPH Rule 511-5-12-.01(2);

(b) The donor's name, address, phone number, and license number if applicable;

(c) The donor will only make donations of drugs in accordance with Code Section 31-8-301;

(d) The donor will insure integrity of any drug requiring temperature control other than "room temperature storage" that is delivered by enclosing in the drug's packaging a USP-recognized method by which the eligible recipient can easily detect improper storage or temperature variations; and

(e) If applicable, the donor will remove or redact any patient names and prescription numbers on donated drugs or otherwise maintain patient confidentiality by executing a confidentiality agreement with the eligible recipient.

(4) An eligible recipient must store and maintain donated drugs in a secure and temperature controlled environment that meets the drug manufacturers' recommendations and United States Pharmacopeial Convention (USP) standards.

(5) A participating eligible recipient shall keep all donated drugs physically or electronically separated from other inventory. Donated inventory may be used to replenish purchased inventory with the same drug name and strength that was previously dispensed or administered to an eligible patient. Replenishment shall follow applicable federal 340B statute and Health Resources and Services Administration guidance.

(6) Drugs may be repackaged as necessary for storage, replenishment, dispensing, administration, or further donation. Repackaged drugs shall be labeled with the drug

name, strength, and expiration date, and shall be kept in a separate designated area until inspected and initialed by a health care professional authorized to dispense.

(7) All donations received but not yet accepted into inventory shall be kept in a separate designated area.

(8) Prior to or upon accepting a donation into inventory, an eligible recipient shall maintain a written or electronic inventory of the donation, including:

(a) The transaction date;

(b) The name, strength, and quantity of each accepted drug; and

(c) The name, address and phone number of the donor.

(9) No record of a donation other than as described in paragraph (8) of this Rule shall be required.

(10) All records required by this Chapter shall be retained in physical or electronic format, on or off the recipient's premise for a period of six years.

(11) A donor or eligible recipient may contract with one another or a third-party to create and/or maintain records on each other's behalf.

(12) An identifier, such as a serial number or barcode, may be used in place of any or all information required by a record or label pursuant to this Chapter if it allows for such information to be readily retrievable. Upon audit by the Department of Public Health the identifier on requested records shall be replaced with the original information. An identifier shall not be used on patient labels when dispensing or administering a drug.

(13) Pursuant to Code Section 26-4-115(b)(3)(A), a drug wholesaler, distributor, supplier, or outsourcing facility registered as provided in Chapter 13 of Title 16 or in Code Section 26-4-115(a), except reverse distributors, shall comply with the requirements of 21 U.S.C. Sections 360ee e-1 through 360eee-4 relating to drug supply chain security. If a donation's transaction history is required, the record of transaction history shall begin with the donor of the drugs, shall include all prior donations, and, if the drug was previously dispensed, shall not include drug information that is not required to be on the drug's label pursuant to Code Section 26-4-80(k)(1).

Cite as Ga. Comp. R. & Regs. R. 511-5-12-.05
Authority: §§ 31-2A-6, 31-8-304.
History. Original Rule was filed as Emergency Rule 511-5-12-0.1-.05 on January 3, 2017; effective January 1, 2017, to remain in effect for a period of 120 days or until the effective date of a permanent Rule covering the same subject matter superseding this Emergency Rule is adopted, as specified by the Agency.
Adopted: Permanent Rule entitled "Receipt, storage, and handling of donated drugs by an eligible recipient." F. Feb. 14, 2017; eff. Mar. 6, 2017.

Rule 511-5-12-.06. Dispensing and distribution of donated drugs.

(1) An eligible recipient may only dispense or administer prescription drugs if otherwise permitted by law.

(2) Donation and the brokering or other facilitation of a donation of a drug pursuant to this program shall not be considered wholesale distribution and shall not require licensure as a wholesaler.

(3) Donated prescription drugs may only be dispensed to eligible patients pursuant to a valid prescription drug order in accordance with Title 26, Chapter 4. That patient shall be provided with appropriate counseling on the use of the prescription drug, including any potential side effects and the fact that the drug was donated.

(4) An eligible recipient may further donate unused prescription drugs to or receive unused prescription drugs from another eligible recipient in the program when one has the need for a drug and another has it available. An inventory of such donations shall be created in accordance with DPH Rule 511-5-12-.05(8) unless both eligible recipients are under common ownership or common control.

(5) An eligible recipient shall dispose of any drug that does not meet all of the requirements of Code Section 31-8-301 in one of the following ways:

   (a) Return the drug to the donor;

   (b) Destroy the drug through an incinerator licensed with the Environmental Protection Agency or other lawful method; or

   (c) Transfer the drug to a reverse distributor.

(6) All such donated drugs to be disposed shall be quarantined in a separately designated area

(7) An eligible recipient shall maintain a written of electronic record of disposal, including:

   (a) The disposal method as described in paragraph (5) of this Rule;

   (b) The date of disposal or quarantine; and

   (c) The name, strength, and quantity of each drug disposed.

(8) No record of disposal other than as described in paragraph (7) of this Rule shall be required.

(9) Donated drugs shall not be resold and shall be considered nonsaleable; provided, however, that reimbursement for any handling fee authorized pursuant to this Chapter shall not constitute reselling.

(10) Before dispensing a donated drug, an eligible recipient shall inspect the drug to determine that it has not adulterated. The drug must be repackaged into a new container or all previous patient information and pharmacy labeling must be redacted or removed from the donated container.

(11) Dispensed drugs must clearly indicate the final dispenser's information and current patient information, and shall be properly labeled in accordance with the regulations of the Georgia Board of Pharmacy.

(12) An eligible recipient that provides donated drugs to an eligible patient shall maintain patient-specific written or electronic records in accordance with Georgia law and the regulations of the Board of Pharmacy. If also providing patients with purchased drugs, the eligible recipient shall also note, either on the face of a written prescription or in the electronic record of prescription, that a donated drug was dispensed to the patient.

(13) An expiration date is required on all donated drugs dispensed. The expiration date shall be brought forward to the filled prescription. If multiple packaged donated drugs are used to fill a single prescription with varied expiration dates, the shortest expiration date shall be used for the dispensed prescription.

(14) Dispensed drugs shall not expire before the use by the patient based on the prescribing practitioner's directions for use or, for over-the-counter medicine not dispensed pursuant to a prescription, the directions for use on the package's label.

(15) Dispensed drugs subject to a United States Food and Drug Administration managed risk evaluation and mitigation strategy pursuant to 21 U.S.C. Section 355-1 shall be managed and dispensed according to the requirements of that strategy.

Cite as Ga. Comp. R. & Regs. R. 511-5-12-.06
Authority: §§ 31-2A-6, 31-8-304.
History. Original Rule was filed as Emergency Rule 511-5-12-0.1-.06 on January 3, 2017; effective January 1, 2017, to remain in effect for a period of 120 days or until the effective date of a permanent Rule covering the same subject matter superseding this Emergency Rule is adopted, as specified by the Agency.
Adopted: Permanent Rule entitled "Dispensing and distribution of donated drugs." F. Feb. 14, 2017; eff. Mar. 6, 2017.

Rule 511-5-12-.07. Handling fees.

(1) An eligible recipient may not charge or collect any fees from an eligible patient for drugs dispensed pursuant to this program; provided, however that an eligible recipient may charge a handling fee for each donated drug that is dispensed. Such a handling fee shall not exceed the reasonable costs of participating in the program including but not limited to the current and anticipated costs of educating eligible donors, providing technical support to participating donors, shipping and handling, labor, storage, licensing, utilities, advertising, technology, supplies and equipment.

(2) Nothing in the preceding paragraph shall limit an eligible recipient from charging fees, including but not limited to a usual and customary charge, to donors, eligible recipients, health plans, pharmacy benefit managers, and other entities.

Cite as Ga. Comp. R. & Regs. R. 511-5-12-.07
Authority: §§ 31-2A-6, 31-8-304.
History. Original Rule was filed as Emergency Rule 511-5-12-0.1-.07 on January 3, 2017; effective January 1, 2017, to remain in effect for a period of 120 days or until the effective date of a permanent Rule covering the same subject matter superseding this Emergency Rule is adopted, as specified by the Agency.
Adopted: Permanent Rule entitled "Handling fees." F. Feb. 14, 2017; eff. Mar. 6, 2017.

Subject 511-5-13. DESIGNATION OF PERINATAL CENTERS.

Rule 511-5-13-.01. Scope and Purpose.

(1) These regulations are enacted pursuant to Sections 50 through -57 of Chapter 2A of Title 31 of the Official Code of Georgia Annotated to establish a program that encourages the improvement of quality of care to create better maternal and neonatal outcomes.

(2) The purpose of these regulations is to establish separate criteria for three maternal and three neonatal levels of care and procedures by which a perinatal facility may request approval to be a designated facility which has achieved a particular DPH designated level of care.

(3) These regulations are not intended to prevent any perinatal facility from providing medical services to a woman or infant.

(4) No perinatal facility shall hold itself out as or advertise itself to the public as having achieved a DPH designated level of care as a maternal or neonatal center unless it has been so designated by the Department.

Cite as Ga. Comp. R. & Regs. R. 511-5-13-.01
Authority: O.C.G.A. § 31-2A-50 through -57.
History. Original Rule entitled "Scope and Purpose" adopted. F. Oct. 22, 2019; eff. Nov. 14, 2019, as specified by the Agency.

Rule 511-5-13-.02. Definitions.

(1) "Designated facility" means a perinatal facility that has been inspected and approved by the Department pursuant to these regulations as meeting its established criteria for a particular maternal or neonatal level of care.

(2) "Perinatal facility" means a hospital, clinic, or birthing center that provides maternal or neonatal health care services.

Cite as Ga. Comp. R. & Regs. R. 511-5-13-.02
Authority: O.C.G.A. § 31-2A-50 through -57.
History. Original Rule entitled "Definitions" adopted. F. Oct. 22, 2019; eff. Nov. 14, 2019, as specified by the Agency.
Amended: F. June 16, 2022; eff. July 16, 2022, as specified by the Agency.

Rule 511-5-13-.03. Designation.

(1) A perinatal facility seeking designation as a maternal or neonatal center shall submit a written application to the Department through an application process to be determined by the Department, and shall provide upon request such additional information, documents, or inspections as the Department may deem necessary.

(2) A perinatal facility may apply for designation or re-designation as a maternal and a neonatal center or may apply for designation or re-designation separately as a maternal center or a neonatal center.

(3) Designation shall be for a period of three years.

(4) A designated facility shall be subject to periodic review by the Department and shall permit on-site inspection and submit data to the Department as may be required by the Department to evaluate whether the designated center has maintained compliance with the requirements of these rules or applicable statutes.

(5) The Department may suspend or revoke a designation, after notice and hearing, if the Department determines that the perinatal facility is not in compliance with the requirements of these rules or applicable statutes.

(6) The Department shall use the following notice and hearing procedures:

1. The Department shall provide written notice to the perinatal facility of any suspension or revocation taken pursuant to this regulation.

2. All suspensions or revocations by the Department are effective twenty days after the perinatal facility's receipt of the Department's notice, unless the perinatal facility makes a timely request for a hearing. In the event a timely request for a hearing is received, the action shall become effective upon the Department's final decision.

3. The perinatal facility may submit a written request for an administrative hearing on the suspension or revocation within twenty days from the date the perinatal facility receives the notice of suspension or revocation.

4. The Department shall provide an administrative hearing on the suspension or revocation if the perinatal facility's written request is delivered to and received by the Department's Women's Health Program no later than twenty days from the date the perinatal facility receives the notice of suspension or revocation.

Cite as Ga. Comp. R. & Regs. R. 511-5-13-.03
Authority: O.C.G.A. § 31-2A-50 through -57.
History. Original Rule entitled "Designation" adopted. F. Oct. 22, 2019; eff. Nov. 14, 2019, as specified by the Agency.

Rule 511-5-13-.04. Designation Criteria for Maternal Centers.

A maternal center must meet all standards applicable to the relevant level of care established by The Joint Commission Maternal Levels of Care Verification Program as amended, restated, supplemented, or otherwise modified from time to time.

Cite as Ga. Comp. R. & Regs. R. 511-5-13-.04
Authority: O.C.G.A. § 31-2A-50 through -57.
History. Original Rule entitled "Designation Criteria for Maternal Centers" adopted. F. Oct. 22, 2019; eff. Nov. 14, 2019, as specified by the Agency.
Amended: F. June 16, 2022; eff. July 16, 2022, as specified by the Agency.

Rule 511-5-13-.05. Designation Criteria for Neonatal Centers.

A neonatal center must meet all standards applicable to the relevant level of care established by the American Academy of Pediatrics Standards for Neonatal Levels of Care as amended, restated, supplemented, or otherwise modified from time to time.

Cite as Ga. Comp. R. & Regs. R. 511-5-13-.05
Authority: O.C.G.A. § 31-2A-50 through -57.
History. Original Rule entitled "Designation Criteria for Neonatal Centers" adopted. F. Oct. 22, 2019; eff. Nov. 14, 2019, as specified by the Agency.
Amended: F. June 16, 2022; eff. July 16, 2022, as specified by the Agency.

Rule 511-5-13-.06. Confidentiality.

The application, supporting documentation, information provided during a site visit, and all documents, reports, data, and information related to the designation process described by these rules shall be deemed confidential, except that the Department may in its sole discretion release such data or information, in de-identified form or for research purposes determined by the Department to have scientific merit. Under no circumstances may information provided during the designation process as described by this Rule be released in such a manner as to lead to the identification of any perinatal facility.

Cite as Ga. Comp. R. & Regs. R. 511-5-13-.06
Authority: O.C.G.A. §§ 31-2A-50 through -57; 31-5-5.
History. Original Rule entitled "Confidentiality" adopted. F. Oct. 22, 2019; eff. Nov. 14, 2019, as specified by the Agency.

Chapter 511-6. FOOD AND LODGING ESTABLISHMENTS.

Subject 511-6-1. FOOD SERVICE.

Rule 511-6-1-.01. Definitions.

(1) "Accredited program" means a food protection manager certification program that has been evaluated and listed by an accrediting agency as conforming to national standards for organizations that certify individuals. It refers to the certification process and is a designation based upon an independent evaluation of factors such as the sponsor's mission; organizational structure; staff resources; revenue sources; policies; public information regarding program scope, eligibility requirements, re-certification, discipline and grievance procedures; test development and administration. Accredited programs does not refer to training functions or educational programs.

(2) "Adulterated" has the meaning stated in the Federal Food, Drug, and Cosmetic Act, § 402.

(3) "Approved" means acceptable to the Health Authority based on a determination of conformity with principles, practices, and generally recognized standards that protect public health.

(4) "Asymptomatic" means without obvious symptoms, not showing or producing indications of a disease or other medical condition, such as an individual infected with a pathogen but not exhibiting or producing any signs or symptoms of vomiting, diarrhea, or jaundice. It includes not showing symptoms because symptoms have resolved or subsided, or because symptoms never manifested.

(5) "Authorization to Operate" means approval from a county board of health to operate within its jurisdiction for a mobile food service establishment that is permitted in another county that is referred to as the county of origin.

(6) "aw" means water activity which is a measure of the free moisture in a food, is the quotient of the water vapor pressure of the substance divided by the vapor pressure of pure water at the same temperature, and is indicated by the symbol aw.

(7) "Balut" means an embryo inside a fertile egg that has been incubated for a period sufficient for the embryo to reach a specific stage of development after which it is removed from incubation before hatching.

(8) "Base of operation" means a fixed location with a food service permit from which a mobile food service unit, extended food service unit, "pop-up" food service operation, or catering food service establishment operates. Mobile food service units operating in conjunction with a restaurant shall obtain a separate base of operation permit in addition to the restaurant's fixed food service permit. A restaurant's fixed food service permit shall not serve as the base of operation permit for the mobile food service unit.

(9) "Beverage" means a liquid for drinking, including water.

(10) "Bottled drinking water" means water that is sealed in bottles, packages, or other containers and offered for sale for human consumption, including bottled mineral water.

(11) "Casing" means a tubular container for sausage products made of either natural or artificial (synthetic) material.

(12) "Catering operation" means the provision of a specific menu and quantity of food for service to a consumer, pursuant to a contract, at a site such as a consumer's home, motion picture filming location, or other event site. Food served during a catering operation may be prepared all or in part at the base of operation and transported to the service site, or it may be prepared and served at the service site.

(13) "Catering food service establishment" means a permitted food service establishment that has been approved by the Health Authority to perform catering operations. A catering food service establishment shall operate from a base of operation within the State of Georgia, and its permit shall be issued by the Health Authority in the county in which its base of operation is located. A catering food service establishment may include one or more mobile catering units and other components which allow for the preparation and service of food at the service site; however, the term shall not include operations such as temporary food service establishments or extended food service establishments, and shall not include delivery of food (for example, pizza) by a food service establishment to a consumer.

(14) "Certification" means a document certifying that an individual has completed an approved food safety training program and has passed a professionally validated food safety examination.

(15) "Certification number" means a unique combination of letters and numbers assigned by a shellfish control authority to a molluscan shellfish dealer according to the provisions of the National Shellfish Sanitation Program.

(16) "Certified food safety manager (CFSM)" means the owner or manager of a food service establishment who has successfully completed a food safety training program approved by the Department and passed a professionally validated CFSM examination that is accredited by the Conference for Food Protection or other accrediting agency as conforming to national standards for organizations that certify individuals.

(17) "CFR" means Code of Federal Regulations.

(18) "CIP" means cleaned in place by the circulation or flowing by mechanical means through a piping system of a detergent solution, water rinse, and sanitizing solution onto or over equipment surfaces that require cleaning, such as the method used, in part, to clean and sanitize a frozen dessert machine. It does not include the cleaning of equipment such as band saws, slicers, or mixers that are subjected to in-place manual cleaning without the use of a CIP system.

(19) "Color additive" has the meaning stated in the Federal Food, Drug, and Cosmetic Act, § 201(t) and 21 CFR 70.3f.

(20) "Commingle" means to combine shellstock harvested on different days or from different growing areas as identified on the tag or label, or to combine shucked shellfish from containers with different container codes or different shucking dates.

(21) "Comminuted" means reduced in size by methods including chopping, flaking, grinding, or mincing. It includes fish or meat products that are reduced in size and restructured or reformulated such as gefilte fish, gyros, ground beef, and sausage and a mixture of two or more types of meat that have been reduced in size and combined, such as sausages made from two or more meats.

(22) "Conditional employee" means a potential food employee to whom a job offer is made, conditional on responses to subsequent medical questions or examinations designed to identify potential food employees who may be suffering from a disease that can be transmitted through food and done in compliance with Title 1 of the Americans with Disabilities Act of 1990.

(23) "Confirmed disease outbreak" means a foodborne disease outbreak in which laboratory analysis of appropriate specimens identifies a causative agent and epidemiological analysis implicates the food as the source of the illness.

(24) "Consumer" means a person who is a member of the general public, takes possession of food, is not functioning in the capacity of an operator of a food service establishment or food processing plant and does not offer the food for resale.

(25) "Core item" means a provision in this Chapter that is not designated as a priority item or a priority foundation item. It includes an item that usually relates to general sanitation, operational controls, sanitation standard operating procedures (SSOPs), facilities or structures, equipment design, or general maintenance.

(26) "Corrosion-resistant material" means a material that maintains acceptable surface cleanability characteristics under prolonged influence of the food to be contacted, the normal use of cleaning compounds and sanitizing solutions, and other conditions of the use environment.

(27) "Counter-mounted equipment" means equipment that is not portable and is designed to be mounted off the floor on a table, counter, or shelf.

(28) "County board of health" means a Board of Health established pursuant to O.C.G.A. § 31-3-1.

(29) "County of origin" means the permitting county for a mobile food service establishment. This is the same county where a mobile food service unit's base of operation is located.

(30) "Critical control point" means a point or procedure in a specific food system where loss of control may result in an unacceptable health risk.

(31) "Critical item" means a provision of this Chapter, that, if in noncompliance, is more likely than other violations to contribute to food contamination, illness, or environmental health hazard and may create an imminent health hazard.

(32) "Critical limit" means the maximum or minimum value to which a physical, biological, or chemical parameter must be controlled at a critical control point to minimize the risk that the identified food safety hazard may occur.

(33) "Cut leafy greens" means fresh leafy greens whose leaves have been cut, shredded, sliced, chopped, or torn. The term "leafy greens" includes iceberg lettuce, romaine lettuce, leaf lettuce, butter lettuce, baby leaf lettuce (i.e., immature lettuce or leafy greens), escarole, endive, spring mix, spinach, cabbage, kale, arugula and chard. The term "leafy greens" does not include herbs such as cilantro or parsley.

(34) "Dealer" means a person who is authorized by a shellfish control authority for the activities of shellstock shipper, shucker-packer, repacker, reshipper, or depuration processor of molluscan shellfish according to the provisions of the National Shellfish Sanitation Program.

(35) "Department" means the Georgia Department of Public Health.

(36) "Disclosure" means a written statement that clearly identifies the animal-derived foods which are, or can be ordered, raw, undercooked, or without otherwise being processed to eliminate pathogens, or items that contain an ingredient that is raw, undercooked, or without otherwise being processed to eliminate pathogens.

(37) "District Standard Trainer" means an Environmental Health Specialist (EHS) appointed by a District Environmental Health Director to train and standardize other EHS in conducting risk based inspections of food service establishments and to monitor their inspection activities as well. In addition, these individuals must successfully complete a standardization exercise and receive standardization certification from the State Environmental Health Section.

(38) "Drinking water" means water that meets criteria as specified in 40 CFR 141 National Primary Drinking Water Regulations, is traditionally known as "potable water", and includes the term "water" except where the term used connotes that the water is not potable, such as "boiler water," "mop water," "rainwater," "wastewater," and "nondrinking" water.

(39) "Dry storage area" means a room or area designated for the storage of packaged or containerized bulk food that is not time/temperature control for safety food and dry goods such as single-service items.

(40) "Easily cleanable" means a characteristic of a surface that allows effective removal of soil by normal cleaning methods; is dependent on the material, design, construction, and installation of the surface; and varies with the likelihood of the surface's role in introducing pathogenic or toxigenic agents or other contaminants into food based on the surface's approved placement, purpose, and use. The application of this general criterion will depend on the purpose of the surface (e.g., food preparation counter, floor, consumer table, etc.)

(41) "Easily movable" means portable, mounted on casters, gliders, or rollers, or provided with a mechanical means to safely tilt a unit of equipment for cleaning. It also means having no utility connection, a utility connection that disconnects quickly, or a flexible utility connection line of sufficient length to allow the equipment to be moved for cleaning of the equipment and adjacent area.

(42) "Egg" means the shell egg of avian species such as a chicken, duck, goose, guinea, quail, ratites or turkey and does not include a balut, or the egg of reptile species such as alligator, or an egg product.

(43) "Egg product" means all, or a portion of, the contents found inside eggs separated from the shell and pasteurized in a food processing plant, with or without added ingredients, intended for human consumption, such as dried, frozen or liquid eggs. It does not include food which contains eggs only in a relatively small proportion such as cake mixes.

(44) "Emergency Operations Plan" is a detailed operations plan outlining how a food service establishment may continue operations in the event an imminent health hazard exists because of an emergency such as a fire, flood, interruption of electrical or water service for two or more hours, sewage malfunction, misuse of poisonous or toxic materials, onset of apparent foodborne illness outbreak, gross unsanitary occurrence or condition, or other circumstances that may endanger public health. The operation plan should demonstrate and outline procedures and actions of how food service management, such as the food service permit holder, person in charge, and food service staff will ensure food can continue to be prepared and served safely without comprising the public's health. The plan should demonstrate how the facility can provide potable water, temperature control, cleaning and sanitizing, and general sanitization when resources may not be available during the event.

(45) "Employee" means the permit holder, person in charge, food employee, person having supervisory or management duties, person on the payroll, family member, volunteer, person performing work under contractual agreement, or other person working in a food service establishment.

(46) "Enough" means occurring in such quantity and quality or scope as to fully satisfy demand or need.

(47) "EPA" means the U.S. Environmental Protection Agency.

(48) "Equipment" means an article that is used in the operation of a food service establishment such as a freezer, grinder, hood, ice maker, meat block, mixer, oven, reach-in refrigerator, scale, sink, slicer, stove, table, temperature measuring device for ambient air, warewashing machine, or other similar devices. It does not include apparatuses used for handling or storing large quantities of packaged foods that are received from a supplier in a cased or overwrapped lot, such as hand trucks, forklifts, dollies, pallets, racks, and skids.

(49) "Exclude" means to prevent a person from working as an employee in a food service establishment or entering a food service establishment as an employee.

(50) "Extended food service unit" means a stationary trailer, kiosk or similar unit operating as an extension of and under the managerial authority of a permitted food service establishment located on the same property.

(51) "Extensively remodeled" means any changes involving structure or location of walls, openings, floors or counters, or modification of plumbing, mechanical or electrical components other than fixtures or in the equipment's layout, arrangement and installation of a food service establishment that the resulting construction, layout, and equipment and installation significantly differs from what was originally approved by the Health Authority at the time of the Health Authority's issuance of a permit. It does not include minor cosmetic changes such as painting, moving equipment for detailed cleaning, detailed cleaning of physical facilities, replacing carpeting in the dining area, or repairing damage to walls, floors, and ceilings.

(52) "Facilitator" means a third-party entity which manages "pop-up" food service operations through permitted food service establishments at an approved location within a building or enclosed courtyard.

(53) "FDA" means the U.S. Food and Drug Administration.

(54) "Fish" means fresh or saltwater finfish, crustaceans and other forms of aquatic life (including alligator, frog, aquatic turtle, jellyfish, sea cucumber, and sea urchin and the roe of such animals) other than birds or mammals, and all mollusks, if such animal life is intended for human consumption. It includes an edible human food product derived in whole or in part from fish, including fish that have been processed in any manner.

(55) "Fixed food service establishment" means a permitted food service establishment that is not mobile.

(56) "Follow-up inspection" means a complete inspection of a food service establishment by the Health Authority to determine compliance with this Chapter and its enforcement purposes in response to findings of the previous routine inspection.

(57) "Food" means a raw, cooked, or processed edible substance, ice, beverage, or ingredient used or intended for use or for sale in whole or in part for human consumption, or chewing gum.

(58) "Food additive" has the meaning stated in the Federal Food, Drug, and Cosmetic Act § 201(s) and 21 CFR 170.3(e)(1).

(59) "Foodborne disease outbreak" means the occurrence of two or more cases of a similar illness resulting from the ingestion of a common food.

(60) "Food-contact surface" means a surface of equipment or a utensil with which food normally comes into contact or a surface of equipment or a utensil from which food may drain, drip, or splash into a food or onto a surface normally in contact with food.

(61) "Food employee" means an individual working with unpackaged food, food equipment or utensils, or food-contact surfaces.

(62) "Food processing plant" means a commercial operation that manufactures, packages, labels, or stores food for human consumption, and provides food for sale or distribution to other business entities such as food processing plants or food service establishments. A food processing plant does not include a food service establishment.

(63) "Food service establishment" means public or private establishments which prepare and serve meals, lunches, short orders, sandwiches, frozen desserts, or other edible products directly to the consumer either for carry out or service within the establishment. Such term includes restaurants; coffee shops; cafeterias; short order cafes; luncheonettes; taverns; lunchrooms; places which retail sandwiches or salads; soda fountains; mobile food service establishments; industrial cafeterias; catering establishments; and similar facilities by whatever name called. Within a food service establishment, there may be a food sales component, not separately operated. This food sales component shall be considered as part of the food service establishment. Such term shall not include the following:

(a) a "food sales establishment" as defined in the O.C.G.A. Section 26-2-21 and subject to regulation by the Georgia Commissioner of Agriculture, except as otherwise in this paragraph.

(b) The food service component of any food sales establishment defined in O.C.G.A. Section 26-2-21;

(c) any outdoor recreation activity sponsored by the state, a county, a municipality, or any department or entity thereof, any outdoor or indoor (other than school

cafeteria food service) public school function, or any outdoor private school function;

(d) any organization which is operating on its own property or on the property of a party that has provided written consent for the use of such property for such purpose and which is exempt from taxes under O.C.G.A. Section 48-7-25(a)(1) or under Section 501(d) or paragraphs (1) through (8) or paragraph (10) of Section 501 (c) of the Internal Revenue Code for the purpose of operating a house or other residential structures where seriously ill or injured children and their families are provided temporary accommodations in proximity to their treatment hospitals and where food is prepared, served, transported, or stored by volunteer personnel;

(e) establishments for the preparation and serving of meals, lunches, short orders, sandwiches, frozen desserts, or other edible products if such preparation or serving is an authorized part of and occurs upon the site of an event which:

1. Is sponsored by a political subdivision of this state;

2. Is held on the property of such sponsor or on the property of a party that has provided written consent for use of such property for such event; and

3. Lasts 120 hours or less; or

(f) nonprofit food sales and food service provided under a permit issued pursuant to O.C.G.A. 26-2-391.

(64) "Food service manager" means any person who supervises or trains a food service worker to follow all food safety regulations. The manager shall be an employee of the permitted food service establishment.

(65) "Food vending location" means a fixed property location where a mobile food service unit or extended food service unit parks to offer its food products to its consumer or a route along a street that a mobile food service unit travels and periodically stops, at predetermined dates and times, to offer its food products to its consumers. The established boundaries of a City, County, the State of Georgia, or any combination thereof, shall not be used to define a food vending location.

(66) "Game animal" means an animal, the products of which are food, that is not classified as livestock, sheep, swine, goat, horse, mule, or other equine in 9 CFR 301.2 Definitions, or as Poultry, or fish. It includes mammals such as reindeer, elk, deer, antelope, water buffalo, bison, rabbit, squirrel, opossum, raccoon, nutria, or muskrat, and nonaquatic reptiles such as land snakes, but does not include ratites.

(67) "General public" means all individuals who have access to facilities that prepare and serve or sell food, including but not limited to, beneficiaries of governmental or private

charitable feeding programs such as soup kitchens; and residents and employees of institutions that provide meals to their residents or employees either with or without direct payment to the institution by the residents or employees such as nursing homes, personal care homes with 25 or more beds, and residential childcare institutions with 13 or more children. It does not include:

(a) residents of private homes or home environments where residents take part in preparing and serving their own meals;

(b) guests in private homes; or

(c) participants in a pot-luck dinner, covered dish supper, or similar event in which the food is prepared or contributed by the participants.

(68) "General use pesticide" means a pesticide that is not classified by EPA for restricted use as specified in 40 CFR 152.175, Pesticides classified for restricted use.

(69) "Grade A standards" means the requirements of the United States Public Health Service/FDA "Grade A Pasteurized Milk Ordinance" with which governs certain fluid and dry milk and milk products.

(70) "HACCP plan" means a written document that specifies the formal procedures for following the Hazard Analysis Critical Control Point principles developed by The National Advisory Committee on Microbiological Criteria for Foods.

(71) "Handwashing sink" means a lavatory, a basin or vessel for washing, a wash basin, or a plumbing fixture especially placed for use in personal hygiene and designed for the washing of the hands and it includes an automatic handwashing facility.

(72) "Hazard" means a biological, chemical, or physical property that may cause an unacceptable consumer health risk.

(73) "Health Authority" means the Department, or a County Board of Health acting as its agent.

(74) "Health practitioner" means a physician licensed to practice medicine, or if allowed by law, a nurse practitioner, physician assistant, or similar medical professional.

(75) "Hermetically sealed container" means a container that is designed and intended to be secure against the entry of microorganisms and, in the case of low acid canned foods, to maintain the commercial sterility of its contents after processing.

(76) "Highly susceptible population" means persons who are more likely than other people in the general population to experience foodborne disease because they are immunocompromised, preschool age children, or older adults and obtaining food at a facility that provides services such as custodial care, health care, or assisted living, such

as a child or adult day care center, kidney dialysis center, hospital or nursing home, or nutritional or socialization services such as a senior center.

(77) "Imminent health hazard" means a product, practice, circumstance, or event that may pose a significant risk of injury or illness to food service employees or to members of the public if not promptly corrected or halted.

(78) "Incubator food service establishment" means a food service establishment properly sized, designed, equipped, and managed to foster other food industry entrepreneurs, such as caterers, by covering the capital startup-cost through the provision of a commercial food service kitchen. These commercial food service kitchen facilities are rented to incubatees/members on a separation of time and space basis. The incubator food service establishment, also known as a kitchen incubator or shared kitchen, enables a food service operation to develop to the stage where it may invest in its own commercial food service establishment equipment and facilities. At the time of adoption of this Chapter, there are two basic types of incubator food service establishments:

(a) Business Model A. A single food service establishment operation that has a single permit holder and incubatees/members are considered to be contractual employees of the permit holder that utilize the food service establishment. In this business model, the layout is an open kitchen in which the incubatees/members operate on a separation of time and space basis.

(b) Business Model B. A business relationship in which incubates/members operate within build-out-units and are considered to be contractual employees of a permit holder on a separation of time and space basis. In this business model, the incubator food service establishment must qualify for a permit and would be responsible for the overall facility and each incubatee/member must obtain a permit to operate within the build-out-units on a separation of time and space basis.

(79) "Incubatee/Member" means a food industry entrepreneur who is operating under the authority and active managerial control of a permit holder of an incubator food service establishment on a separation of time and space basis.

(80) "Initial inspection" means an inspection of a food service establishment conducted by the Health Authority to determine the food service establishment's compliance with applicable Law and this Chapter for the purpose of the issuance of a permit.

(81) "Injected" means manipulating meat by introducing a solution into its interior by processes that are referred to as "injecting," "pump marinating," or "stitch pumping".

(82) "Juice" means the liquid expressed or extracted from one or more fruits or vegetables, purees of the edible portions of one or more fruits or vegetables, or any concentrates of such liquid or puree. It includes juice as a whole beverage, an ingredient of a beverage and a purée as an ingredient of a beverage, but does not include, for purposes of

HACCP, liquids, purées, or concentrates that are not used as beverages or ingredients of beverages.

(83) "Kitchenware" means food preparation and storage utensils. It does not include tableware.

(84) "Key Drop Deliveries" means a type of delivery in which distributors place products into food service establishments outside of its normal, business hours or when the establishment is closed.

(85) "Law" means applicable local, state, and federal statutes, regulations, and ordinances.

(86) "Limited food preparation" means no combining of ingredients except the addition of seasonings, toppings or condiments.

(87) "Linens" means fabric items such as cloth hampers, cloth napkins, table cloths, wiping cloths, and work garments including cloth gloves.

(88) "Major food allergen" means milk, egg, fish (such as bass, flounder, cod, and including crustacean such as crab, lobster, or shrimp), tree nuts (such as almonds, pecans, or walnuts), wheat, peanuts, and soybeans; or a food ingredient that contains protein derived from a food specified in this definition. It does not include any highly refined oil derived from a major food allergen or any ingredient derived from such highly refined oil; or any ingredient that is exempt under the petition or notification process specified in the Food Allergen Labeling and Consumer Protection Act of 2004 (Public Law 108-282).

(89) "Meat" means the flesh of animals used as food including the dressed flesh of cattle, swine, sheep, or goats and other edible animals. It does not include fish, poultry, or wild game animals.

(90) "Mechanically Tenderized" means manipulating meat with deep penetration by processes which may be referred to as "blade tenderizing," "jaccarding," "pinning," "needling," or using blades, pins, needles or any mechanical device. It does not include processes by which solutions are injected into meat.

(91) "mg/L" means milligrams per liter, which is the metric equivalent of parts per million (ppm).

(92) "Mobile catering unit" means a trailer, pushcart, vehicle or other similar conveyance operating as part of a permitted catering food service establishment. This term shall include any conveyance used in conjunction with a catering operation, whether or not food is prepared or served in the conveyance.

(93) "Mobile food service establishment" means a mobile food service unit operating from a single base of operation and under the managerial authority of one permit holder.

(94) "Mobile food service unit" means an independent trailer, motor driven or manually propelled pushcart, food truck, watercraft, movable portable structure, vehicle vendor or any other similar conveyance which is not connected to a permanent water supply or sewer disposal system and from which food is offered for sale or service.

(95) "Molluscan shellfish" means any edible species of fresh or frozen oysters, clams, mussels, and scallops or edible portions thereof, except when the scallop product consists only of the shucked muscle.

(96) "Non-continuous cooking" means the cooking of food in a food establishment using a process in which the initial heating of the food is intentionally halted so that it may be cooled and held for complete cooking at a later time prior to sale or service. Non-continuous cooking does not include cooking procedures that only involve temporarily interrupting or slowing an otherwise continuous cooking process.

(97) "Packaged" means bottled, canned, cartoned, securely bagged or securely wrapped, whether packaged in a food service establishment or a food processing plant. It does not include a wrapper, carry-out box or other nondurable container used to containerize food with for the purpose of protecting food during or delivery to the consumer.

(98) "Permit" means the document issued by the Health Authority that authorizes a person to operate a food service establishment and signifies satisfactory compliance with these rules.

(99) "Permit holder" means the person who possesses a valid permit to operate a food service establishment and is legally responsible for the operation of the food service establishment such as the owner, the owner's agent, or other person.

(100) "Person or Persons" means any individual, firm, partnership, corporation, trustee, or association, or combination thereof.

(101) "Person in charge" means the permit holder, the certified food safety manager (CFSM), or individual present at a food service establishment who is responsible for managing food safety of the operation at the time of inspection. If no individual has been designated as the person in charge at the time of inspection, then any employee present may be considered the person in charge by the Health Authority.

(102) "Personal care items" means items or substances that may be poisonous, toxic or a source of contamination and are used to maintain or enhance a person's health, hygiene or appearance. They include items such as medicines; first aid supplies; cosmetics; and toiletries such as toothpaste and mouthwash.

(103) "pH" means the symbol for the negative logarithm of the hydrogen ion concentration, which is a measure of the degree of acidity or alkalinity of a solution. Values between zero and seven indicate acidity and values between seven and fourteen indicate alkalinity. The value for pure distilled water is seven, which is considered neutral.

(104) "Physical facilities" means the structure, playground areas, and interior surfaces of a food service establishment including accessories such as soap and towel dispensers and attachments such as light fixtures and heating or air conditioning system vents.

(105) "Plumbing fixture" means a receptacle or device that is permanently or temporarily connected to the water distribution system of the premises and demands a supply of water from the system or discharges used water, waste materials, or sewage directly or indirectly to the drainage system of the premises.

(106) "Plumbing system" means the water supply and distribution pipes; plumbing fixtures and traps; soil, waste, and vent pipes; sanitary and storm sewers and building drains, including their respective connections, devices, and appurtenances within the premises; and water-treating equipment.

(107) "Poisonous or toxic materials" means substances that are not intended for ingestion and are included in any one of these categories:

(a) Cleaners and sanitizers, which include cleaning and sanitizing agents and agents such as caustics, acids, drying agents, polishes and other chemicals; Pesticides, except sanitizers, which include substances such as insecticides and rodenticides;

(b) Substances necessary for the operation and maintenance of the establishment such as nonfood grade lubricants and personal care items that may be deleterious to health; or

(c) Substances that are not necessary for the operation and maintenance of the establishment and are on the premises for retail sale, such as petroleum products and paints.

(108) "Pop-up food service operation" means the sale of food to a limited group of customers by a permitted food service establishment, coordinated through a facilitator, at an off-site location within a building or enclosed courtyard that has been approved by the Health Authority.

(109) "Poultry" means any domesticated bird (chickens, turkeys, ducks, geese, guineas, ratites, or squabs), whether live or dead, as defined in 9 CFR 381.1, Poultry Products Inspection Regulations Definitions, Poultry; and any migratory waterfowl or game bird, pheasant, partridge, quail, grouse, or pigeon, whether live or dead, as defined in 9 CFR 362.1, Voluntary Poultry Inspection Regulations Definitions.

(110) "Premises" means and includes all physical buildings, appurtenances, parking lots and all property owned or used by the food service establishment.

(111) "Preparation of food" means to put together or make by combining ingredients and processing food for final service.

(112) "Primal cut" means a basic major cut into which carcasses and sides of meat are separated, such as a beef round, pork loin, lamb flank, or veal breast.

(113) "Priority item" means a provision in this Chapter whose application contributes directly to the elimination, prevention or reduction to an acceptable level, hazards associated with foodborne illness or injury and there is no other provision that more directly controls the hazard. Priority item includes items with a quantifiable measure to show control of hazards such as cooking, reheating, cooling, and handwashing. Priority items are identified in this Chapter with a superscript P- P.

(114) "Priority foundation item" means a provision in this Chapter whose application supports, facilitates or enables one or more priority items. It includes an item that requires the purposeful incorporation of specific actions, equipment or procedures by industry management to attain control of risk factors that contribute to foodborne illness or injury such as personnel training, infrastructure or necessary equipment, HACCP plans, documentation or record keeping, and labeling. Priority foundation items are identified in this Chapter with a superscript Pf - Pf.

(115) "Public water system" has the meaning stated in 40 CFR 141, National Primary Drinking Water Regulations.

(116) "Pushcart" means a human propelled, self-contained, enclosed food service cart that operates at predetermined locations as approved by the Health Authority. Its menu is limited to the preparation and serving of hot dogs or fully cooked encased sausages requiring reheating only, condiments such as commercially prepared chili dispensed from approved dispensers, and commercially prepared, prepackaged, time/temperature control for safety foods such as burritos and tamales, served in their original packaging, requiring reheating only or limited to serving non-time/temperature control for safety foods.

(117) "Ratite" means a flightless bird such as an emu, ostrich, or rhea.

(118) "Ready-to-Eat Food" means food that is in a form that is edible without additional preparation to achieve food safety, or is a raw or partially cooked animal food and the consumer is advised, or is prepared in accordance with a variance that is granted, and may receive additional preparation for palatability or aesthetic, epicurean, gastronomic, or culinary purposes. It includes:

(a) Raw animal food that is cooked as specified under DPH Rule 511-6-1-.04(5)(a) or (b) or frozen as specified under DPH Rule 511-6-1-.04(5)(e);

(b) Raw fruits and vegetables that are washed;

(c) Fruits and vegetables that are cooked for hot holding;

(d) All time/temperature control for safety food that is cooked to the temperature and time required for the specific food and cooled;

(e) Plant food for which further washing, cooking, or other processing is not required for food safety, and from which rinds, peels, husks, or shells, if naturally present are removed;

(f) Substances derived from plants such as spices, seasonings, and sugar;

(g) A bakery item such as bread, cakes, pies, fillings, or icing for which further cooking is not required for food safety;

(h) The following products that are produced in accordance with USDA guidelines and that have received a lethality treatment for pathogens: dry, fermented sausages, such as dry salami or pepperoni; salt-cured meat and poultry products, such as prosciutto ham, country cured ham, and Parma ham; and dried meat and poultry products, such as jerky or beef sticks; and

(i) Foods manufactured as specified in 21 CFR Part 113, Thermally Processed Low-Acid Foods Packaged in Hermetically Sealed Containers.

(119) "Reduced Oxygen Packaging" means the reduction of the amount of oxygen in a package by removing oxygen; displacing oxygen and replacing it with another gas or combination of gases; or otherwise controlling the oxygen content to a level below that normally found in the atmosphere (approximately 21% at sea level); and a process specified in this definition that involves a food for which the hazards Clostridium botulinum or Listeria monocytogenes require control in the final packaged form. It includes:

(a) Vacuum packaging, in which air is removed from a package of food and the package is hermetically sealed so that a vacuum remains inside the package;

(b) Modified atmosphere packaging, in which the atmosphere of a package of food is modified so that its composition is different from air but the atmosphere may change over time due to the permeability of the packaging material or the respiration of the food. Modified atmosphere packaging includes reduction in the proportion of oxygen, total replacement of oxygen, or an increase in the proportion of other gases such as carbon dioxide or nitrogen;

(c) Controlled atmosphere packaging, in which the atmosphere of a package of food is modified so that until the package is opened, its composition is different from air, and continuous control of that atmosphere is maintained, such as by using oxygen scavengers or a combination of total replacement of oxygen, nonrespiring food, and impermeable packaging material;

(d) Cook chill packaging, in which cooked food is hot filled into impermeable bags which have the air expelled and are then sealed or crimped closed. The bagged food is rapidly chilled and refrigerated at temperatures that inhibit the growth of psychrotrophic pathogens; or

(e) Sous vide packaging, in which raw or partially cooked food is vacuum packaged in an impermeable bag, cooked in the bag, rapidly chilled, and refrigerated at temperatures that inhibit the growth of psychrotrophic pathogens.

(120) "Refuse" means solid waste that is not carried by water through the sewage system.

(121) "Reminder" means a written statement concerning the health risk of consuming animal foods raw, undercooked, or without otherwise being processed to eliminate pathogens.

(122) "Re-service" means the transfer of food that is unused and returned by a consumer after being served or sold and in the possession of the consumer, to another person.

(123) "Restrict" means to limit the activities of a food employee so that there is no risk of transmitting a disease that is transmissible through food and the food employee does not work with exposed food, clean equipment, utensils, linens, or unwrapped single-service or single-use articles.

(124) "Restricted egg" means any check, dirty egg, incubator reject, inedible, leaker, or loss as defined in 9 CFR 590.

(125) "Restricted use pesticide" means a pesticide product that contains the active ingredients specified in 40 CFR 152.175 Pesticides classified for restricted use, and that is limited to use by or under the direct supervision of a certified applicator.

(126) "Risk" means the likelihood that an adverse health effect will occur within a population as a result of a hazard in a food.

(127) "Routine inspection" means the first complete inspection of a food service establishment conducted by the Health Authority after the initial inspection for issuance of a permit. For purposes of routine enforcement of this Chapter, it is also the normal routine monitoring of the food service establishment by the Health Authority to assess satisfactory compliance with the provisions of the Chapter.

(128) "Safe material" means:

(a) An article manufactured from or composed of materials that may not reasonably be expected to result, directly or indirectly, in their becoming a component or otherwise affecting the characteristics of any food;

(b) An additive that is used as specified in Sections 409 of the Federal Food, Drug, and Cosmetic Act; or

(c) Other materials that are not additives and that are used in conformity with applicable regulations of the Food and Drug Administration.

(129) "Sanitization" means the application of cumulative heat or chemicals on cleaned food-contact surfaces that, when evaluated for efficacy, is sufficient to yield a reduction of 5 logs, which is equal to a 99.999% reduction of representative disease microorganisms of public health importance.

(130) "Sealed" means free of cracks or other openings that allow the entry or passage of moisture.

(131) "Service animal" means an animal such as a guide dog or signal dog, that has been specifically trained to provide assistance to an individual with a disability as determined by the Americans with Disabilities Act.

(132) "Servicing area" means an operating base location to which a mobile food service unit or transportation vehicle returns at least once daily for such things as vehicle and equipment cleaning, discharging liquid or solid wastes, refilling water tanks and ice bins, and boarding food.

(133) "Sewage" means liquid waste containing animal or vegetable matter in suspension or solution and may include liquids containing chemicals in solution.

(134) "Shellfish certification number" means a unique combination of letters and numbers assigned by a shellfish control authority to a molluscan shellfish dealer according to the provisions of the National Shellfish Sanitation Program.

(135) "Shellfish control authority" means a state, federal, foreign, tribal, or other government entity legally responsible for administering a program that includes certification of molluscan shellfish harvesters and dealers for interstate commerce.

(136) "Shellstock" means raw, in-shell molluscan shellfish.

(137) "Shiga toxin - producing Escherichia coli" (STEC) means any E. coli capable of producing Shiga toxins (also called verocytotoxins). STEC infections can be asymptomatic or may result in a spectrum of illness ranging from mild non-bloody diarrhea, to hemorrhagic colitis (i.e., bloody diarrhea), to hemolytic uremic syndrome (HUS - a type of kidney failure). Examples of serotypes of STEC include E. coli O157:H7; E. coli O157:NM; E. coli O26:H11; E. coli O145:NM; E. coli O103:H2; and E. coli O111:NM. STEC are sometimes referred to as VTEC (verocytotoxigenic E. coli) or as EHEC (Enterohemorrhagic E. coli). EHEC are a subset of STEC which can cause hemorrhagic colitis or HUS.

(138) "Shucked shellfish" means molluscan shellfish that have one or both shells removed.

(139) "Single-service articles" means tableware, carry-out utensils, cups, lids or closures, plates, napkins, doilies, bags, containers, placemats, stirrers, straws, toothpicks, and wrappers that are intended to be used once by one person and then discarded.

(140) "Single-use articles" means utensils and bulk food containers designed and constructed to be used once and discarded. It includes items such as wax paper, butcher paper, plastic wrap, formed aluminum food containers, jars, plastic tubs or buckets, bread wrappers, pickle barrels, ketchup bottles and number ten cans which are not considered durable and cannot be cleaned and sanitized by an approved method.

(141) "Slacking" means the process of moderating the temperature of a food such as allowing a food to gradually increase from a temperature of -23°C (-10°F) to -4°C (25°F) in preparation for deep-fat frying or to facilitate even heat penetration during the cooking of previously block-frozen food such as shrimp.

(142) "Smooth" means a surface that has no roughness or projections that render it difficult to clean or maintain in a sanitary condition.

(143) "Special food service operation" means a mobile food service establishment, an extended food service establishment, a temporary food service establishment, a "pop-up" food service operation, a catering food service establishment, or an incubator food service establishment.

(144) "State Office Standard-Trainer" means State Environmental Health Office personnel at the Program Consultant level who have been appointed by the State Food Service Program Director to train and standardize district appointed environmental health specialist to become District Standard-Trainers and to monitor district standardization activities as well. In addition, these individuals must successfully complete a standardization exercise and receive standardization certification from the State Environmental Health Section and/or United States Food and Drug Administration (FDA) prior to being assigned duties and responsibilities of a standard-trainer.

(145) "Table-mounted equipment" means equipment that is not portable and is designed to be mounted off the floor on a table, counter, or shelf.

(146) "Tableware" means eating, drinking, and serving utensils for table use such as flatware including forks, knives, and spoons; hollowware including bowls, cups, serving dishes, and tumblers; and plates.

(147) "Temperature measuring device" means a thermometer, thermocouple, thermistor, or other device that indicates the temperature of food, air, or water.

(148) "Temporary food service establishment" means a food service establishment that operates at the same location for a period of no more than 14 consecutive days in conjunction with a single event or celebration.

(149) "Time/Temperature Control for Safety Food" (formerly "potentially hazardous food" or "PHF")

(a) "Time/temperature control for safety food" means a food that requires time/temperature control for safety (TCS) to limit pathogenic microorganism growth or toxin formation.

(b) "Time/temperature control for safety food" includes an animal food that is raw or heat-treated; a plant food that is heat-treated or consists of raw seed sprouts, cut melons, cut leafy greens, cut tomatoes or mixtures of cut tomatoes that are not modified in a way so that they are unable to support pathogenic microorganism growth or toxin formation, or garlic-in-oil mixtures that are not modified in a way so that they are unable to support pathogenic microorganism growth or toxin formation; and except as specified in 3.(iv) of this definition, a food that because of the interaction of its AW and PH values is designated as Product Assessment Required (PA) in Table A or B of this definition:

Table A. Interaction of pH and a_w for control of spores in food heat-treated to destroy vegetative cells and subsequently packaged

a_w values	pH values		
	4.6 or less	> 4.6 - 5.6	> 5.6
<0.92	non-TCS food*	non-TCS FOOD	non-TCS FOOD
> 0.92 - .95	non-TCS food	non-TCS FOOD	PA**
>0.95	non-TCS food	PA	PA

* TCS food means Time/Temperature Control for Safety food

** PA means Product Assessment required

Table B. Interaction of pH and a_w for control of vegetative cells and spores in food not heat-treated or heat-treated but not packaged

a_w values	pH values			
	< 4.2	4.2 - 4.6	> 4.6 - 5.0	>5.0
< 0.88	non-TCS food*	non-TCS food	non-TCS food	non-TCS food
0.88 - 0.90	non-TCS food	non-TCS food	non-TCS food	PA**
> 0.90 - 0.92	non-TCS food	non-TCS food	PA	PA
> 0.92	non-TCS food	PA	PA	PA

* TCS food means Time/Temperature Control for Safety food

** PA means Product Assessment required

(c) "Time/temperature control for safety food" does not include:

1. An air-cooled hard-boiled EGG with shell intact, or an EGG with shell intact that is not hard-boiled, but has been pasteurized to destroy all viable salmonellae;

2. A food in an unopened hermetically sealed container that is commercially processed to achieve and maintain commercial sterility under conditions of non-refrigerated storage and distribution;

3. A food that because of its pH or Aw value, or interaction of Aw and pH values, is designated as a non-TCS food in Table A or B of this definition;

4. A food that is designated as Product Assessment Required (PA) in Table A or B of this definition and has undergone a Product Assessment showing that the growth or toxin formation of pathogenic microorganisms that are reasonably likely to occur in that food is precluded due to:

   (i) Intrinsic factors including added or natural characteristics of the food such as preservatives, antimicrobials, humectants, acidulants, or nutrients,

   (ii) Extrinsic factors including environmental or operational factors that affect the food such as packaging, modified atmosphere such as Reduced Oxygen Packaging, shelf life and use, or temperature range of storage and use, or

   (iii) A combination of intrinsic and extrinsic factors; or

5. A food that does not support the growth or toxin formation of pathogenic microorganisms even though the food may contain a pathogenic microorganism or chemical or physical contaminant at a level sufficient to cause illness or injury.

(150) "USDA" means the U.S. Department of Agriculture.

(151) "Utensil" means a food-contact implement or container used in the storage, preparation, transportation, dispensing, sale, or service of food, such as kitchenware or tableware that is multiuse, single-service, or single-use; gloves used in contact with food; temperature sensing probes of food temperature measuring devices; and probe-type price or identification tags used in contact with food.

(152) "Variance" means a written document issued by the Department that authorizes a modification or waiver of one or more requirements of this Chapter if, in the opinion of the Department, a health hazard or nuisance will not result from the modification or waiver.

(153) "Vehicle Vender" means a foodservice unit mounted on a vehicle registered with the Georgia Department of Revenue, Division of Motor Vehicles and approved for street usage, designed to be readily movable, and which serves multiple locations on a daily

basis along a route which is approved by the Health Authority. It operates on a grab-and-go basis in which the consumer selects packaged food from holding equipment and pays the driver of the vehicle. The majority of food is processed, packaged in individual portions and labeled at the base of operation for service to the consumer. However, some foods may be purchased for sale from licensed food distributors.

(154) "Vending machine" means a self-service device that, upon insertion of a coin, paper currency, token, card, or key, or by optional manual operation, dispenses unit servings of food in bulk or in packages without the necessity of replenishing the device between each vending operation.

(155) "Vending machine location" means the room, enclosure, space, or area where one or more vending machines are installed and operated and includes the storage areas and areas on the premises that are used to service and maintain the vending machines.

(156) "Warewashing" means the cleaning and sanitizing of utensils and food-contact surfaces of equipment.

(157) "Whole-muscle, intact beef" means whole-muscle beef that is not injected, mechanically tenderized, reconstructed, or scored and marinated, from which beef steaks may be cut.

Cite as Ga. Comp. R. & Regs. R. 511-6-1-.01
Authority: O.C.G.A. §§ 31-2A-6, 26-2-373, 379.
History. Original Rule entitled "Definitions" adopted. F. Oct. 9, 2015; eff. Oct. 29, 2015.
Amended: F. July 24, 2018; eff. August 13, 2018.
Amended: F. Oct. 1, 2018; eff. Oct. 21, 2018.
Amended: F. Sep. 25, 2020; eff. Oct. 16, 2020, as specified by the Agency.
Amended: F. Jan. 25, 2023; eff. Feb. 24, 2023, as specified by the Agency.

Rule 511-6-1-.02. Provisions.

(1) Permit.

(a) Valid Permit Required.

1. Except when a mobile food service establishment has been permitted in a county of origin and has been authorized to operate in such other county, it shall be unlawful for any person to operate any type of food service operation: fixed food service establishment, mobile food service establishment, extended food service establishment, temporary food service establishment, catering food service establishment, or incubator food service establishment without having first obtained a valid food service permit from the Health Authority pursuant to this Chapter.

2. Permits shall be issued by the Health Authority on forms prescribed by the Department.

3. Permits shall only be issued to one permit holder, to one location, and to one type of operation.

4. Permits shall not be issued to separately owned food service operations which propose to utilize common food service equipment and facilities.

(b) Invalidation.

1. Permits shall expire upon change of permit holder, location, or type of operation. However, changes in food vending locations will not invalidate a mobile food service unit's permit or an extended food service unit permit so long as the new locations are within the jurisdiction of the permitting Health Authority.

2. Upon transfer of ownership of an existing food service establishment, the Health Authority may issue a Provisional Permit to correct noncompliant construction or equipment problems at the food service establishment after conducting an initial inspection if:

   (i) the new owner has not significantly changed the menu, such as menu changes described in paragraphs (g)1., 2., and 3. of this subsection, and the establishment has not been extensively remodeled from the plans originally approved by the Health Authority for the previous ownership;

   (ii) the food service establishment achieves satisfactory compliance with the provisions of this Chapter, and does not have an imminent health hazard that represents a threat to public health during the inspection; and,

   (iii) the applicant meets the requirements set forth in paragraphs (c)1 and (c)2 of this subsection and DPH Rule 511-6-1-.02(3)a.

3. A Provisional Permit shall expire 60 days after issuance, unless suspended or revoked, and shall not be renewed. The Provisional permit holder shall correct all non-compliant construction or equipment problems identified prior to the Health Authority issuing a food service permit.

(c) Satisfactory Compliance.

1. To qualify for a permit, an applicant shall:

(i) Be an owner of the food service establishment or an officer of the legal ownership;

(ii) Agree to allow the Health Authority access to the food service establishment; and

(iii) Provide required information and pay all applicable fees at the time the application is submitted;

2. Prior to the issuance of the permit to new or existing establishments, the applicant shall provide evidence of satisfactory compliance with the provisions of this Chapter and all other provisions of laws that apply to the location, construction and maintenance of food service establishments and the safety of persons therein.

(d) Displaying the Inspection Report.

1. The most current inspection report shall be prominently displayed in public view at all times, within fifteen feet of the front or primary public door and between five feet and seven feet from the floor and in an area where it can be read at a distance of one foot away.

2. Food service establishments with drive-thru windows will post the current inspection report, and also have the inspection report posted so that a minimum of the top one-third of a copy of the current inspection report is visible through each window allowing customers to easily read the score, date of inspection and establishment information.

3. At food service establishments with no primary or public door, the current inspection report shall be prominently displayed at all times where the documents can be read by the public from a distance of one foot away. If requirements of this paragraph are not possible because of physical restrictions, a location will be determined as approved by the Health Authority.

4. The most current inspection report for mobile food service units and extended food service units issued by the local Health Authority having jurisdiction for its inspections shall be prominently displayed in public view during all hours of operation. Such inspection reports shall be prominently displayed at the point of service where the documents can be read by the public from a distance of one foot away.

5. A food service establishment inspection report addendum need not be displayed, but shall be made available by the food service establishment to the public upon request.

(e) Property. The permit shall be returned within seven days to the local Health Authority when the food service establishment ceases to operate, has a change in ownership, is moved to another location or when the permit is revoked.

(f) Responsibilities of the Permit Holder. The permit holder shall:

1. Post the permit as specified in DPH Rule 511-6-1-.02(1)(d);

2. Comply with the provisions of this Chapter including the conditions of a granted variance as specified under DPH Rule 511-6-1-.10(5)(a), and approved plans as specified under subsection (6)(b) of this Rule;

3. If a food service establishment is required under DPH Rule 511-6-1-.02(7) to operate under a HACCP plan, comply with the plan as specified under DPH Rule 511-6-1-.10(8);

4. Immediately contact the Health Authority to report an illness of a food employee or conditional employee as specified under DPH Rule 511-6-1-.03(4)(b);

5. Immediately discontinue operations and notify the Health Authority if an imminent health hazard may exist as specified under DPH Rule 511-6-1-.03(2)(n);

6. Allow representatives of the Health Authority access to the food service establishment as specified under DPH Rule 511-6-1-.10(2)(d);

7. As required within DPH Rule 511-6-1-.08(1)(i)1, maintain and provide to the Health Authority, a current listing of all food vending locations for mobile food service units and extended food service units for the purpose of enabling representatives of the Health Authority access to these units for inspection as specified in DPH Rule 511-6-1-.10(2)(d);

8. Replace existing facilities and equipment with facilities and equipment that comply with this Chapter if:

   (i) The Health Authority directs the replacement because the facilities and equipment constitute a public health hazard or nuisance, or because they no longer comply with the criteria upon which the facilities and equipment were accepted;

(ii) The Health Authority directs the replacement of the facilities and equipment because of a change of ownership, if existing equipment cannot meet the following criteria:

(I) Equipment must be capable of being maintained in state of good repair and satisfactorily function for its intended purpose according to requirements of this Chapter;

(II) Equipment must be capable of being maintained in a sanitary condition as required by this Chapter; and

(III) Food-contact surfaces of equipment must remain nontoxic as required by this Chapter.

(iii) The facilities and equipment are replaced in the normal course of operation;

9. Comply with directives of the Health Authority including time frames for corrective actions specified in inspection reports, notices, orders, warnings, and other directives issued by the Health Authority; and

10. Accept notices issued and served by the Health Authority according to law.

(g) Notification of Menu Change. The Health Authority must be notified prior to adding any food item to the menu that:

1. Requires the installation of equipment or structural modification of the food service establishment;

2. Involves a food preparation process, which may consist of cooking, cooling or reheating food, that was not performed in the establishment prior to the menu change; or

3. Poses a health risk to consumers because it is a raw animal food served raw or undercooked.

(2) Mobile Food Service Unit. A food service permit will be issued to a mobile food service establishment in the county of origin where the base of operation is located. A separate "Mobile Food Service Unit Permit" will be issued for each mobile food service unit in the county of origin.

(a) Mobile food service units shall not operate as separate and independent entities apart from the authority of the active managerial control of the permit holder for its base of operation.

(b) Requirements. Mobile food service units operating in conjunction with a restaurant shall operate from a base of operation that meets the following:

1. A restaurant shall have a separate food service permit from the base of operation permit. A restaurant's fixed food service permit shall not serve as the base of operation permit for the mobile food service unit.

2. The following permits shall be required prior to mobile food service units operating in conjunction with a restaurant base of operation:

   (i) A fixed food service permit for restaurant operations; and

   (ii) A base of operation permit for mobile food service unit(s); and

   (iii) Permit for mobile food service unit(s).

(3) Application for a Permit.

(a) Requirements. The management of the food service establishment, including a mobile food service unit in the county of origin and an extended foodservice unit, shall submit to the local Health Authority an application for a permit at least ten business days prior to the anticipated date of opening and commencement of the operation of the food service establishment, mobile food service unit, or extended food service unit.

(b) Contents of the Application. The application shall include:

1. The name, birth date, mailing address, telephone number, and signature of the person applying for the permit and the name, mailing address, and location of the food service establishment;

2. Information specifying whether the food service establishment is owned by an association, corporation, individual, partnership, or other legal entity;

3. A statement specifying whether the food service establishment:

   (i) Is mobile or stationary and temporary or permanent, and

   (ii) Is an operation that includes one or more of the following:

      (I) Prepares, offers for sale, or serves time /temperature control for safety food:

         I. Only to order upon a consumer's request,

II. In advance in quantities based on projected consumer demand and discards food that is not sold or served at an approved frequency,

III. Using time as the public health control as specified under DPH Rule 511-6-1-.04(6)(i), or

IV. Using a process or activity that may require a HACCP plan as specified under DPH Rule 511-6-1-.02(7).

(II) Prepares time/temperature control for safety food in advance using a food preparation method that involves two or more steps, such as combining time/temperature control for safety food ingredients, cooking, cooling, reheating, hot or cold holding, freezing, or thawing;

(III) Prepares food as specified under paragraph 3(ii)(II) of this subsection for delivery to and consumption at a location off the premises of the food service establishment where it is prepared;

(IV) Prepares food as specified under paragraph 3(ii)(II) of this subsection for service to a highly susceptible population;

(V) Prepares only food that is not time/temperature control for safety food, or

(VI) Does not prepare, but offers for sale only prepackaged food that is not time/temperature control for safety food;

4. The name, title, address, and telephone number of the person directly responsible for the management of the food service establishment;

5. The name, title, address, and telephone number of the person who functions as the immediate supervisor of the person specified under paragraph 4 of this subsection such as the zone, district, or regional supervisor;

6. The names, titles, and addresses of:

   (i) All persons who share legal ownership as specified under paragraph 2 of this subsection including owners, shareholders, members, or partners, and

(ii) The local resident agent if one is required based on the type of legal ownership;

7. A statement signed by the applicant that:

(i) Attests to the accuracy of the information provided in the application, and

(ii) Affirms that the applicant will:

(I) Comply with this Chapter, and

(II) Allow the Health Authority access to the establishment as specified under DPH Rule 511-6-1-.10(2)(d) and to the records specified under DPH Rule 511-6-1-.04(3)(l) and DPH Rule 511-6-1-.06(2)(q) and DPH Rule 511-6-1-.02(8)(d)7; and

8. Other information required by the Health Authority.

(c) Duplicate Forms. The application shall be prepared in duplicate on forms provided by the Department. The original shall be forwarded to the local Health Authority and the copy retained by the management.

(d) Dates of Operation for Temporary Food Service Establishments. The application for a temporary food service establishment shall show the start and end dates of the proposed operation.

(e) Schedule of Vending Locations for Permitted Mobile Food Service Establishments. The completed application for a mobile food service establishment in the county of origin shall include a schedule of locations and times where the mobile food service unit(s) will be parked and operated. The completed application for each mobile food service unit permit will include the schedule of locations where the individual unit will be parked and operated. It will be the responsibility of the permit holder to update the Health Authority when a change in schedule is made as specified within paragraph (1)(f)(7) of this subsection.

(f) Schedule of Vending Locations for Mobile Food Service Establishments with an "Authorization to Operate". The completed application for authorization to operate outside the county of origin shall include a schedule of locations and times where the mobile food service unit(s) will be parked and operated. The completed application for mobile food service unit(s) will include the schedule of locations where the individual unit will be parked and operated. It will be the responsibility

of the permit holder to update the Health Authority when a change in schedule is made as specified within paragraph (1)(f)(7) of this subsection.

(g) Schedule of County Locations for Mobile Food Service Establishments with an "Authorization to Operate". The completed application for authorization to operate outside the county of origin shall include a listing of any other counties where the mobile food service establishment intends to operate. The listing shall be updated by the mobile food service establishment when it operates in additional counties. Such information shall be submitted in a manner determined by the Health Authority, but an electronic format shall be available.

(4) Authorization to Operate Permitted Mobile Food Service Units outside the county of origin.

(a) A county board of health outside a mobile food service establishment's county of origin shall recognize the permit from the mobile food service establishment's county of origin. Such recognition shall authorize the mobile food service establishment to operate in an outside county subject to the ordinances of such county or city.

(b) A county board of health shall use the following process to recognize a permit from a mobile food service establishment's county of origin:

1. Prior to operating in a county outside the mobile food service establishment's county of origin, a mobile food service establishment shall submit to the county board of health in the outside county a copy of its mobile food service establishment permit from its county of origin, its permit for its base of operations, a listing of any other counties where it is authorized to operate, a listing of locations in the county where the mobile food service establishment intends to operate, a listing of the dates and times of intended operation, and any other documentation required by the county board of health. The listing of any other counties where the mobile food service establishment intends to operate shall be updated by the mobile food service establishment when it operates in additional counties. Such information shall be submitted in a manner determined by the county board of health, but an electronic delivery format shall be available; and

2. Upon receipt of all required information, the county board of health in the outside county shall verify on the Department of Public Health's permit inspection data base that the permit is in good standing in the county of origin and in any other counties where the mobile food service establishment has been authorized to operate. All county boards of health shall utilize the department's permit inspection data base.

(i) The county board of health for such outside county may charge an administrative fee, limited to the costs incurred, to confirm the

mobile food service establishment's standing in other counties where it is authorized to operate.

(ii) Upon verification that the permit is in good standing and there are not public health or safety concerns, a county board of health shall recognize the permit and shall authorize the mobile food service establishment to operate in its jurisdiction and have jurisdiction over the mobile food service establishment.

(5) Refusal to recognize a Mobile Food Service Establishment. An outside county may refuse to recognize a mobile food service establishment's permit if the base of operation or mobile food service unit permit is not from another county in this state, if the base of operation or mobile food service unit permit is not in good standing in the county of origin or any county within which it is authorized to operate, or for public health and safety concerns. If the county refuses to recognize a mobile food service establishment's permit, the county shall provide the mobile food service establishment written notice regarding the basis for its refusal.

(6) When Plans Are Required.

(a) Approval of Plans. Properly prepared plans to scale and specifications must be submitted for review and approval when a food service establishment is constructed or extensively remodeled, or when an existing structure is converted to use as a food service establishment.[PF]

(b) Submission of Plans. The plans and specifications shall be submitted to the Health Authority of the county in which the food service establishment will be constructed at least fourteen business days prior to beginning construction. The plans shall indicate the proposed menu, floor plan layout, arrangement of equipment, mechanical plans, construction materials and finish schedule, the type and model of proposed fixed equipment and facilities and the anticipated service volume per day.

(c) Review of Plans and Specifications. Plans and specifications shall be reviewed as per guidance provided within the most current version of the "Food Service Establishment Manual for Design, Installation and Construction" referenced within subsection (7) of this Rule.

(7) When a HACCP Plan is Required.

(a) Before engaging in an activity that requires a HACCP plan, a permit applicant or permit holder shall submit to the local Health Authority for joint review by the State Office of Environmental Health and the local Health Authority, a properly

prepared HACCP plan as specified under DPH Rule 511-6-1-.02(8) and the relevant provisions of this Code if:

1. Submission of a HACCP plan is required according to the Chapter;

2. A variance is required as specified DPH Rule 511-6-1-.04(5)(a)4(iv), 511-6-1-.04(6)(j), or 511-6-1-.05(2)(v)2;

3. The local Health Authority determines that a food preparation or processing method requires a variance based on a plan submittal specified under DPH Rule 511-6-1-.02(4)(b), or an inspectional finding, or a variance request.

(b) Before engaging in Reduced Oxygen Packaging without a variance as specified in DPH Rule 511-6-1-.04(6)(k), a permit applicant or permit holder shall submit a properly prepared HACCP plan to the Health Authority.

(8) Contents of a HACCP plan. For a food establishment that is required under DPH Rule 511-6-1-.02(7)(a) and (b) to have a HACCP plan, the plan and specifications shall indicate:

(a) Categorization of Foods. A categorization of the types of time/temperature control for safety foods that are specified in the menu such as soups and sauces, salads, and bulk solid foods such as meat roasts or other foods that are specified by the Health Authority;[PF]

(b) Flow Diagram. A flow diagram by specific food or category type that identifies critical control points and provides information on ingredients, materials and equipment used in the preparation of that food and formulations or recipes that delineate methods and procedural control measures that address the food safety concerns involved;[PF]

(c) Training Plan. Food employee and supervisory training plan that addresses the food safety issues of concern;[PF]

(d) Standard Operating Procedures. A statement of standard operating procedures for the plan under consideration including clearly identifying:

1. Hazard analysis of menu items,[PF]

2. Each critical control point,[PF]

3. The critical limits for each critical control point,

4. The method and frequency for monitoring and controlling each critical control point by the food employee designated by the person in charge,[PF]

5. Action to be taken by the person in charge if the critical limits for each critical control point are not met,[PF] and

6. The method and frequency for the person in charge to routinely verify that the food employee is following standard operating procedures and monitoring critical control points,[PF] and

7. Records to be maintained by the person in charge to demonstrate that the HACCP plan is properly operated and managed,[PF] and

(e) Additional Scientific Data. Additional scientific data or other information, as required by the Health Authority, supporting the determination that food safety is not compromised by the proposal.[PF]

(9) Requirements - Permit Issued. For food service establishments that are required to submit plans as specified under paragraph (6) of this Rule, the Health Authority shall issue a permit to the applicant after:

(a) A properly completed application is submitted;

(b) The required fee is submitted;

(c) The required plans, specifications, and information are reviewed and approved; and

(d) A preoperational inspection shows that the establishment is built or remodeled in accordance with the approved plans and specifications and that the establishment is incompliance with this Chapter. In addition, it may be used to verify that existing construction meets the requirements of the Chapter during a change in permit holder.

(10) Interpretation of this Chapter. This Chapter shall be interpreted by the Department. Interpretations and guidance may be found in the current editions of the "Interpretation Manual for the Georgia Rules and Regulations for Food Service" and "Food Service Establishment Manual for Design, Installation and Construction".

Cite as Ga. Comp. R. & Regs. R. 511-6-1-.02
Authority: O.C.G.A. §§26-2-371-373, 379, 31-2A-6.
History. Original Rule entitled "Provisions" adopted. F. Oct. 9, 2015; eff. Oct. 29, 2015.
Amended: F. Jan. 25, 2023; eff. Feb. 24, 2023, as specified by the Agency.

Rule 511-6-1-.03. Management and Personnel.

(1) Demonstration of Knowledge. Based on the risk of foodborne illness inherent to the food service operation, during inspections and upon request, the person in charge shall demonstrate to the Health Authority knowledge of foodborne disease prevention, application of the Hazard Analysis Critical Control Point principles, and the requirements of this Chapter. The person in charge shall demonstrate this knowledge in one of the following ways:

(a) Compliance with Chapter. Complying with this Chapter by having no violations of Priority Items during the current inspection;[Pf]

(b) Certified Food Service Manager. Being a certified food service manager who has shown proficiency of required information through passing a test that is part of an accredited program;[Pf] or

(c) Correct Answers to Food Safety Questions. Responding correctly to the inspector's questions as they relate to the specific food operation. The areas of knowledge include:

1. Describing the relationship between the prevention of foodborne disease and the personal hygiene of a food employee;[Pf]

2. Explaining the responsibility of the person in charge for preventing the transmission of foodborne disease by a food employee who has a disease or medical condition that may cause foodborne disease;[Pf]

3. Describing the symptoms associated with the diseases that are transmissible through food;[Pf]

4. Explaining the significance of the relationship between maintaining the time and temperature of time/temperature control for safety food and the prevention of foodborne illness;[Pf]

5. Explaining the hazards involved in the consumption of raw or undercooked meat, poultry, eggs, and fish;[Pf]

6. Stating the required food temperatures and times for safe cooking of time/temperature control for safety food including meat, poultry, eggs, and fish;[Pf]

7. Stating the required temperatures and times for the safe refrigerated storage, hot holding, cooling, and reheating of time/temperature control for safety food;[Pf]

8. Describing the relationship between the prevention of foodborne illness and the management and control of the following:

(i) Cross contamination,[Pf]

(ii) Hand contact with ready-to-eat foods,[Pf]

(iii) Handwashing,[Pf] and

(iv) Maintaining the food service establishment in a clean condition and in good repair;[Pf]

9. Describing foods identified as major food allergens and the symptoms major food allergen could cause in a sensitive individual who has an allergic reaction;[Pf]

10. Explaining the relationship between food safety and providing equipment that is:

    (i) Sufficient in number and capacity,[Pf] and

    (ii) Properly designed, constructed, located, installed, operated, maintained, and cleaned;[Pf]

11. Explaining correct procedures for cleaning and sanitizing utensils and food-contact surfaces of equipment;[Pf]

12. Identifying the source of water used and measures taken to ensure that it remains protected from contamination such as providing protection from backflow and precluding the creation of cross connections;[Pf]

13. Identifying poisonous or toxic materials in the food service establishment and the procedures necessary to ensure that they are safely stored, dispensed, used, and disposed of according to law;[Pf]

14. Identifying critical control points in the operation from purchasing through sale or service that when not controlled may contribute to the transmission of foodborne illness and explaining steps taken to ensure that the points are controlled in accordance with the requirements of this Chapter;[Pf]

15. Explaining the details of how the person in charge and food employees comply with the HACCP plan if a plan is required by the law, this Chapter, or an agreement between the Health Authority and the food service establishment;[Pf]

16. Explaining the responsibilities, rights, and authorities assigned by this Chapter to the:

    (i) Food employee,[Pf]

(ii) Conditional employee,[Pf]

(iii) Person in charge;[Pf]

(iv) Health Authority;[Pf] and

17. Explaining how the person in charge, food employees, and conditional employees comply with reporting responsibilities and exclusion or restriction of food employees.[Pf]

(2) Responsibilities of the Person in Charge (PIC). There must be a person in charge on the premises of the food service establishment at all times. The person in charge shall ensure compliance with the following:

(a) Operations Not Conducted in Private Home. Food service establishment operations are not conducted in a private home or in a room used as living or sleeping quarters;[Pf]

(b) Authorized Personnel Access. Persons unnecessary to the food service establishment operation are not allowed in the food preparation, food storage, or warewashing areas, except that brief visits and tours may be authorized by the person in charge if steps are taken to ensure that exposed food; clean equipment, utensils, and linens; and unwrapped single-service and single-use articles are protected from contamination;[Pf]

(c) Authorized Persons Compliance. Employees and other persons such as delivery and maintenance persons and pesticide applicators entering the food preparation, food storage, and warewashing areas comply with this Chapter;[Pf]

(d) Employee Handwashing. Employees are effectively cleaning their hands, by routinely monitoring the employees' handwashing;[Pf]

(e) Monitoring of Receiving. Employees are visibly observing and verifying delivered foods as they are received to determine that they are from approved sources and are placed into appropriate storage locations, as required by this Chapter, such that they are received and maintained at the required temperatures, protected from contamination, unadulterated, and accurately presented, by routinely monitoring the employees' observations, maintaining receiving/corrective action records for deliveries during non-operating hours, and periodically evaluating foods upon their receipt as specified within DPH Rule 511-6-1-.04(3)(m);[Pf]

(f) Proper Cooking Techniques. Employees are properly cooking cold/hot holding, and reheating for hot holding time/temperature control for safety food, being particularly careful in cooking, reheating, and holding those foods known to cause

severe foodborne illness and death, such as eggs and comminuted meats, through daily oversight of the employees' routine monitoring of the cooking, holding, and reheating for hot holding temperatures using appropriate temperature measuring devices properly scaled and calibrated.[Pf]

(g) Proper Cooling Methods. Employees are using proper methods to rapidly cool time/temperature control for safety food, that are not held hot or are not for consumption within four hours, through daily oversight of the employees' routine monitoring of food temperatures during cooling;[Pf]

(h) Consumer Food Safety. Consumers who order raw or partially cooked ready-to-eat foods of animal origin are informed that the food is not cooked sufficiently to ensure its safety;[Pf]

(i) Proper Sanitizing. Employees are properly sanitizing cleaned multiuse equipment and utensils before they are reused, through routine monitoring of solution temperature and exposure time for hot water sanitizing, and chemical concentration, pH, temperature, and exposure time for chemical sanitizing;[Pf]

(j) Clean Tableware. Consumers are notified that clean tableware is to be used when they return to self-service areas such as salad bars and buffets;[Pf]

(k) Bare Hand Contact. Unless the conditions specified in DPH Rule 511-6-1-.04(4)(a)4 are met, employees are preventing cross-contamination of ready-to-eat food with bare hands by properly using suitable utensils such as deli tissue, spatulas, tongs, single-use gloves, or dispensing equipment;[Pf]

(l) Food Safety Training. Employees are properly trained in food safety, including food allergy awareness, as it relates to their assigned duties;[Pf]

(m) Reporting Responsibilities. Food employees and conditional employees are informed in a verifiable manner of their responsibility to report in accordance with the Chapter, to the person in charge, information about their health and activities as they relate to diseases that are transmissible through food;[Pf] and

(n) Imminent Health Hazard. If an imminent health hazard exists because of an emergency such as a fire, flood, interruption of electrical or water service for two or more hours, sewage malfunction, misuse of poisonous or toxic materials, onset of an apparent foodborne illness outbreak, gross unsanitary occurrence or condition, or other circumstances that may endanger public health, then operations are immediately discontinued and the Health Authority is notified. P However, establishments may continue to operate based upon emergency guidance provided by the Health Authority or under an emergency operation plan that has been approved by the Health Authority prior to the occurrence of such emergency events.[Pf]

(o) Procedures and Plans. Written procedures and plans, where specified by this Chapter and as developed by the food service establishment, are maintained and implemented as required.[Pf]

(3) Certified Food Safety Manager.

(a) Food Safety Manager Certification. Food service establishments shall have in its employ a Certified Food Safety Manager (CFSM) as specified in paragraph (b) of this subsection to ensure food safety is being managed within the food service establishment during all hours of operation as specified within paragraph (d) of this subsection.[Pf]

(b) Certification Requirements/Exemptions. At least one employee that has supervisory and management responsibility and the authority to direct and control food preparation and service shall be a certified food safety manager who has shown proficiency of required information through passing a test that is part of an accredited program that conforms to the national standards for organizations that certify individuals. Certified Food Safety Managers must be designated to one food service establishment only and maintain and renew certification in accordance with the requirements of the examination taken.

1. The following operations are not required to have a certified owner or manager:

(i) A mobile food service unit that does not process foods;

(ii) Food service establishments that serve non-time/temperature control for safety food that requires limited preparation, or those time/temperature control for safety foods which have been previously prepared in a permitted food service establishment; and

(iii) Temporary food service establishments in accordance with DPH Rule 511-6-1-.08(2)(a).

2. A food service establishment will have sixty days from the date of initial permit issuance, change of ownership permit issuance, or termination of employment of its CFSM to employ a new CFSM.

3. A food service establishment that operates without a CFSM shall notify the Health Authority within thirty days of the date that the establishment ceases to employ a CFSM with the name and certification number of the former CFSM and measures being taken to designate a new CFSM. Measures shall include:

(i) Hiring a new CFSM;

(ii) Designating an existing employee who is enrolled in an approved CFSM training course; or

(iii) Hiring a new employee who is enrolled in an approved CFSM training course.

(c) Certification Documentation.

1. The original CFSM certificate shall be posted in public view in each food service establishment. An additional copy shall be retained on file at the food service establishment at all times, and shall be made available for inspection by the Health Authority.

2. A CFSM certificate which has expired, been revoked or suspended shall not be posted in the food service establishment.

3. All licenses, certificates, diplomas, or other similar credentials issued or granted to an owner or operator who has successfully completed an approved or accredited food safety certification course and exam shall expire on the expiration date determined by the credentialing organization. Within ninety days of the expiration of the CFSM certificate, the CFSM shall enroll in an approved food safety training course, pass an approved exam and obtain a new certificate.

4. The certification is not transferable between persons.

(d) Certified Food Safety Manager Responsibility.

1. The responsibility of the CFSM shall include the safety of food preparation and service by ensuring that all employees who handle, or have responsibility for handling, unpackaged foods of any kind, have sufficient knowledge of safe preparation and service of the food. The nature and extent of the knowledge that each employee is required to have may be tailored, as appropriate, to the employee's duties related to food safety issues.

2. The CFSM shall:

(i) Be the person-in-charge while on the premises of the food service establishment and shall designate someone else to be the person in charge when not on the premises;

(ii) Supervise and instruct food service employees in the techniques of sanitary food handling and proper maintenance of the facility;

(iii) Offer a training program for all food service employees to satisfy employee proficiency in their job responsibilities for food safety;

(iv) Communicate with representatives of the Health Authority about the effectiveness of employee training programs; and

(v) Assess training needs of the food service employees and request formal training as needed.

(4) Employee Health.

(a) Requirement to Report Symptoms, Diagnosis and History of Exposure. The permit holder shall require food employees and conditional employees to report to the CFSM and person in charge, information about their health and activities as they relate to diseases that are transmissible through food. A food employee or conditional employee shall report the information in a manner that allows the CFSM and person in charge to reduce the risk of foodborne disease transmission, including providing necessary additional information, such as the date of onset of symptoms and an illness, or of a diagnosis without symptoms, if the food employee or conditional employee:

1. Has any of the following symptoms:

(i) Vomiting,[P]

(ii) Diarrhea,[P]

(iii) Jaundice,[P]

(iv) Sore throat with fever,[P] or

(v) A lesion containing pus such as a boil or infected wound that is open or draining and is:

(I) On the hands or wrists, unless an impermeable cover such as a finger cot or stall protects the lesion and a single-use glove is worn over the impermeable cover,[P]

(II) On exposed portions of the arms, unless the lesion is protected by an impermeable cover,[P] or

(III) On other parts of the body, unless the lesion is covered by a dry, durable, tight-fitting bandage;[P]

2. Has an illness diagnosed by a health practitioner due to:

(i) Norovirus,[P]

(ii) Hepatitis A virus,[P]

(iii) Shigella spp.,[P]

(iv) Shiga toxin-producing Escherichia coli,[P]

(v) typhoid fever (caused by Salmonella Typhi);[P] or

(vi) nontyphoidal Salmonella;[P]

3. Had typhoid fever (caused by Salmonella Typhi), diagnosed by a health practitioner, within the past three months, without having received antibiotic therapy as determined by a health practitioner;[P]

4. Had been exposed to, or is the suspected source of, a confirmed disease outbreak, because the food employee or conditional employee consumed or prepared food implicated in the outbreak, or consumed food at an event prepared by a person who is infected or ill with:

   (i) Norovirus within the past 48 hours of the last exposure,[P]

   (ii) Shiga toxin-producing Escherichia coli, or Shigella spp. within the past three days of the last exposure,[P]

   (iii) typhoid fever (caused by Salmonella Typhi) within the past 14 days of the last exposure,[P] or

   (iv) Hepatitis A virus within the past 30 days of the last exposure;[P] or

5. Has been exposed by attending or working in a setting where there is a confirmed disease outbreak, or living in the same household as, and has knowledge about, an individual who works or attends a setting where there is a confirmed disease outbreak, or living in the same household as, and has knowledge about, an individual diagnosed with an illness caused by:

   (i) Norovirus within the past 48 hours of the last exposure,[P]

   (ii) Shiga toxin-producing Escherichia coli, or Shigella spp. within the past three days of the last exposure,[P]

   (iii) typhoid fever (caused by Salmonella Typhi) within the past 14 days of the last exposure,[P] or

(iv) Hepatitis A virus within the past 30 days of the last exposure.[P]

(b) Responsibility of Person in Charge to Notify the Health Authority. The CFSM or person in charge shall notify the Health Authority when a food employee is:

1. Jaundiced,[Pf] or

2. Diagnosed with an illness due to Norovirus, Hepatitis A virus, Shigella spp., Shiga toxin-producing Escherichia coli, or typhoid fever (caused by Salmonella Typhi).[P]

(c) Person in Charge's Responsibility to Prohibit a Symptomatic Conditional Employee. The person in charge shall ensure that a conditional employee:

1. Who exhibits or reports a symptom, or who reports a diagnosed illness as specified under subsection (4)(a)1 - 3 of this Rule, is prohibited from becoming a food employee until the conditional employee meets the criteria for the specific symptoms or diagnosed illness as specified under subsection (4)(h) of this Rule;[P] and

2. Who will work as a food employee in a food service establishment that serves as a highly susceptible population and reports a history of exposure as specified under subsections (4)(a)4 and 5 of this Rule, is prohibited from becoming a food employee until the conditional employee meets the criteria as specified under subsection (4)(h)10 of this Rule.[P]

(d) Person In Charge's Responsibility to Exclude or Restrict a Symptomatic Employee. The person in charge shall ensure that a food employee who exhibits or reports a symptom, or who reports a diagnosed illness or a history of exposure as specified under subsections (4)(a)1 through 5 of this Rule is excluded or restricted and in compliance with a removal, adjustment or retention of an exclusion or restriction.[P]

(e) Responsibility of Food Employee and Conditional Employee to Report. A food employee or conditional employee shall report to the person in charge the information as specified under subsection (4)(a) of this Rule.[Pf]

(f) Responsibility of Food Employee to Comply. A food employee shall comply with an exclusion or restriction and with a removal, adjustment or retention of an exclusion or restriction.[P]

(g) Exclusions and Restrictions. The person in charge shall exclude or restrict a food employee, from a food service establishment in accordance with the following:

1. Except when the symptom is from a noninfectious condition, exclude a food employee if the food employee is:

   (i) Symptomatic with vomiting or diarrhea;[P] or

   (ii) Symptomatic with vomiting or diarrhea and diagnosed with an infection from Norovirus, Shigella spp., nontyphoidal Salmonella, or Shiga toxin-producing Escherichia coli.[P]

2. Exclude a food employee who is:

   (i) Jaundiced and the onset of jaundice occurred within the last seven calendar days, unless the food employee provides to the person in charge written medical documentation from a health practitioner specifying that the jaundice is not caused by hepatitis A virus or other fecal-orally transmitted infection;[P]

   (ii) Diagnosed with an infection from hepatitis A virus within 14 calendar days from the onset of any illness symptoms, or within seven calendar days of the onset of jaundice;[P] or

   (iii) Diagnosed with an infection from hepatitis A virus without developing symptoms.[P]

3. Exclude a food employee who is diagnosed with typhoid fever (caused by Salmonella Typhi), or reports a previous diagnosis of typhoid fever (caused by Salmonella Typhi) within the past three months, without having received antibiotic therapy.[P]

4. Exclude a food employee that works in a food service establishment serving a highly susceptible population who is:

   (i) Diagnosed with an infection from Norovirus and is asymptomatic;[P]

   (ii) Diagnosed with an infection from Shigella spp. and is asymptomatic;[P]

   (iii) Diagnosed with an infection from Shiga toxin-producing E. coli, and is asymptomatic;[P] or

   (iv) Ill with symptoms of acute onset of sore throat with fever.[P]

5. Restrict a food employee that works in a food service establishment not serving a highly susceptible population who is:

   (i) Diagnosed with an infection from Norovirus and is asymptomatic;[P]

(ii) Diagnosed with an infection from Shigella spp. and is asymptomatic;[P]

(iii) Diagnosed with an infection from Shiga toxin-producing E. coli, and is asymptomatic;[P] or

(iv) Ill with symptoms of acute onset of sore throat with fever.[P]

6. Restrict a food employee that is infected with a skin lesion containing pus such as a boil or infected wound that is open or draining and not properly covered.[P]

7. Restrict a food employee that is exposed to a foodborne pathogen as specified under subsections (4)(a)4 or 5 of this Rule, if the food employee who works in a food service establishment serving a highly susceptible population.[P]

8. Restrict a food employee that is diagnosed with an infection from nontyphoidal Salmonella and is asymptomatic who works in a food service establishment serving a highly susceptible population or in a food service establishment not serving a highly susceptible population.

(h) Removal, Adjustment, or Retention of Exclusions and Restrictions. The person in charge may remove, adjust, or retain the exclusion or restriction of a food employee according to the following conditions:

1. Except when a food employee is diagnosed with an infection from hepatitis A virus or typhoid fever (caused by Salmonella Typhi):

(i) Reinstate a food employee who was excluded for being symptomatic with vomiting or diarrhea if the food employee:

(I) Is asymptomatic for at least 24 hours;[P] or

(II) Provides to the person in charge written medical documentation from a health practitioner that states the symptom is from a noninfectious condition.[P]

(ii) If a food employee was diagnosed with an infection from Norovirus, and excluded for being symptomatic with vomiting or diarrhea:

(I) Restrict the food employee, who is asymptomatic for at least 24 hours and works in a food service establishment not serving a highly susceptible population, until the conditions

for reinstatement as specified under paragraphs 4(i) or (ii) of this subsection are met;[P] or

(II) Retain the exclusion for the food employee, who is asymptomatic for at least 24 hours and works in a food service establishment that serves a highly susceptible population, until the conditions for reinstatement as specified under paragraphs 4(i) or (ii) of this subsection are met.[P]

(iii) If a food employee was diagnosed with an infection from Shigella, and excluded for being symptomatic with vomiting or diarrhea:

(I) Restrict the food employee who is asymptomatic for at least 24 hours and works in a food service establishment not serving a highly susceptible population, until the conditions for reinstatement as specified under paragraphs 5(i) or (ii), of this subsection are met;[P] or

(II) Retain the exclusion for the food employee, who is asymptomatic for at least 24 hours and works in a food service establishment that serves a highly susceptible population, until the conditions for reinstatement as specified under paragraphs 5(i) or (ii), or 5(i) and 1(iii)(I) of this subsection are met.[P]

(iv) If a food service employee was diagnosed with an infection from Shiga toxin-producing Escherichia coli and excluded for being symptomatic with vomiting or diarrhea:

(I) Restrict the food service employee, who is asymptomatic for at least 24 hours and works in a food service establishment not serving a high susceptible population, until the conditions for reinstatement as specified under paragraphs 6(i) or (ii) of this section are met;[P] or

(II) Retain the exclusion for the food employee who is asymptomatic for at least 24 hours and works in a food service establishment that serves a highly susceptible population, until the conditions for reinstatement as specified under paragraphs (6)(i) or (ii) of this subsection are met.[P]

(v) If food employee was diagnosed with an infection from nontyphoidal Salmonella and excluded for being symptomatic with vomiting or diarrhea:

(I) Restrict the food employee who is asymptomatic for at least 30 days until conditions for reinstatement specified under paragraphs (7)(i) or (ii) of this subsection are met.[P]

(II) Retain the exclusion for the food employee who is symptomatic, until conditions for reinstatement under paragraphs (7)(i) or (ii) of this subsection are met.[P]

2. Reinstate a food employee who was excluded as specified under paragraph (4)(g)2 of this Rule if the person in charge obtains approval from the Health Authority and one of the following conditions is met:

(i) The food employee has been jaundiced for more than seven calendar days;[P]

(ii) The anicteric food employee has been symptomatic with symptoms other than jaundice for more than 14 calendar days;[P] or

(iii) The food employee provides to the person in charge written medical documentation from a health practitioner stating that the food employee is free of a hepatitis A virus infection.[P]

3. Reinstate a food employee who was excluded for a diagnosis of typhoid fever (caused by Salmonella Typhi), or a previous infection of typhoid fever within the past 3 months without receiving antibiotic treatment if:

(i) The person in charge obtains approval from the Health Authority;[P] and

(ii) The food employee provides to the person in charge written medical documentation from a health practitioner that states the food employee is free from typhoid fever (caused by Salmonella Typhi).[P]

4. Reinstate a food employee who was excluded for being symptomatic with Norovirus or asymptomatic with Norovirus and working in a food service establishment serving a highly susceptible population or who was restricted for being asymptomatic with Norovirus in a food service establishment not serving a highly susceptible population if the person in charge obtains approval from the Health Authority and one of the following conditions is met:

(i) The excluded or restricted food employee provides to the person in charge written medical documentation from a health practitioner stating that the food employee is free of a Norovirus infection;[P]

(ii) The food employee was excluded or restricted after symptoms of vomiting or diarrhea resolved, and more than 48 hours have passed since the food employee became asymptomatic;[P] or

(iii) The food employee was excluded or restricted and did not develop symptoms and more than 48 hours have passed since the food employee was diagnosed.[P]

5. Reinstate a food employee who was excluded for being symptomatic with Shigella or asymptomatic with Shigella and working in a food service establishment serving a highly susceptible population or who was restricted for being asymptomatic with Shigella in a food service establishment not serving a highly susceptible population if the person in charge obtains approval from the Health Authority and one of the following conditions is met:

(i) The excluded or restricted food employee provides to the person in charge written medical documentation from a health practitioner stating that the food employee is free of a Shigella spp. infection based on test results showing two consecutive negative stool specimen cultures that are taken:

(I) Not earlier than 48 hours after discontinuance of antibiotics,[P] and

(II) At least 24 hours apart;[P]

(ii) The food employee was excluded or restricted after symptoms of vomiting or diarrhea resolved, and more than seven calendar days have passed since the food employee became asymptomatic;[P] or

(iii) The food employee was excluded or restricted and did not develop symptoms and more than seven calendar days have passed since the food employee was diagnosed.[P]

6. Reinstate a food employee who was excluded for being symptomatic with Shiga toxin-producing Escherichia coli or asymptomatic with Shiga toxin-producing Escherichia coli and working in a food service establishment serving a highly susceptible population or who was restricted for being asymptomatic with Shiga toxin-producing Escherichia coli in a food service

establishment not serving a highly susceptible population if the person in charge obtains approval from the Health Authority and one of the following conditions is met:

(i) The excluded or restricted food employee provides to the person in charge written medical documentation from a health practitioner stating that the food employee is free of an infection from Shiga toxin-producing Escherichia coli based on test results that show two consecutive negative stool specimen cultures that are taken:

(I) Not earlier than 48 hours after discontinuance of antibiotics;[P] and

(II) At least 24 hours apart;[P]

(ii) The food employee was excluded or restricted after symptoms of vomiting or diarrhea resolved and more than seven calendar days have passed since the food employee became asymptomatic;[P] or

(iii) The food employee was excluded or restricted and did not develop symptoms and more than seven days have passed since the food employee was diagnosed.[P]

7. Reinstate a food employee who was excluded for being symptomatic with nontyphoidal Salmonella or who was restricted for being asymptomatic with nontyphoidal Salmonella and working in a Highly Susceptible Population or a food service establishment not serving a Highly Susceptible Population if the Person in Charge obtains approval from the Health Authority and one of the following conditions is met:

(i) The excluded or restricted food employee provides to the Person in Charge written medical documentation from a health practitioner stating that the food employee is free of a nontyphoidal Salmonella infection based on test results showing 2 consecutive negative stool specimen cultures that are taken;

(I) Not earlier than 48 hours after discontinuance of antibiotics,[P] and

(II) At least 24 hours apart;[P]

(ii) The food employee was restricted after symptoms of vomiting or diarrhea resolved, and more than 30 days have passed since the food employee became asymptomatic;[P] or

(iii) The food employee was excluded or restricted and did not develop symptoms and more than 30 days have passed since the food employee was diagnosed.

8. Reinstate a food employee who was excluded or restricted for being ill with symptoms of acute onset of sore throat with fever if the food employee provides to the person in charge written medical documentation from a health practitioner stating that the food employee meets one of the following conditions:

   (i) Has received antibiotic therapy for Streptococcus pyogenes infection for more than 24 hours;[P]

   (ii) Has at least one negative throat specimen culture for Streptococcus pyogenes infection;[P] or

   (iii) Is otherwise determined by a health practitioner to be free of a Streptococcus pyogenes infection.[P]

9. Reinstate a food employee who was restricted for a skin lesion containing pus such as a boil or infected wound that was open and draining if the skin, infected wound, cut, or pustular boil is properly covered with one of the following:

   (i) An impermeable cover such as a finger cot or stall and a single-use glove over the impermeable cover if the infected wound or pustular boil is on the hand, finger, or wrist;[P]

   (ii) An impermeable cover on the arm if the infected wound or pustular boil is on the arm;[P] or

   (iii) A dry, durable, tight-fitting bandage if the infected wound or pustular boil is on another part of the body.[P]

10. Reinstate a food employee who was restricted in a food service establishment serving a highly susceptible population due to exposure to one of the following pathogens as specified under subsection (4)(a)4 or 5 of this Rule:

   (i) Norovirus and one of the following conditions is met:

      (I) More than 48 hours have passed since the last day the food employee was potentially exposed;[P] or

(II) More than 48 hours have passed since the food employee's household contact became symptomatic.[P]

(ii) Shigella spp. or Shiga toxin-producing Escherichia coli and one of the following conditions is met:

(I) More than three calendar days have passed since the last day the food employee was potentially exposed;[P] or

(II) More than three calendar days have passed since the food employee's household contact became asymptomatic.[P]

(iii) Typhoid fever (caused by Salmonella Typhi) and one of the following conditions is met:

(I) More than 14 calendar days have passed since the last day the food employee was potentially exposed;[P] or

(II) More than 14 calendar days have passed since the food employee's household contact became asymptomatic.[P]

(iv) Hepatitis A virus and one of the following conditions is met:

(I) The food employee is immune to hepatitis A virus infection because of a prior illness from hepatitis A;

(II) The food employee is immune to hepatitis A virus infection because of vaccination against hepatitis A;[P]

(III) The food employee is immune to hepatitis A virus infection because of IgG administration;[P]

(IV) More than 30 calendar days have passed since the last day the food employee was potentially exposed;[P]

(V) More than 30 calendar days have passed since the food employee's household contact became jaundiced;[P] or

(VI) The food employee does not use an alternative procedure that allows bare hand contact with ready-to-eat food through a variance until at least 30 days after the potential exposure, and the food employee receives additional training about:

I. Hepatitis A symptoms and preventing the transmission of infection,[P]

II. Proper handwashing procedures,[P] and

III. Protecting ready-to-eat food from contamination introduced by bare hand contact.[P]

(5) Personal Cleanliness:

(a) Clean Condition. Food employees shall keep their hands and exposed portions of their arms clean.[P]

(b) Cleaning Procedure.

1. Except as specified in paragraph 4 of this subsection, food employees shall clean their hands and exposed portions of their arms, including surrogate prosthetic devices for hands or arms, for at least 20 seconds, using a cleaning compound in a handwashing sink that is properly equipped.[P]

2. Food employees shall use the following cleaning procedure in the order stated to clean their hands and exposed portions of their arms, including surrogate prosthetic devices for hands and arms:

(i) Rinse under clean, running warm water;[P]

(ii) Apply an amount of cleaning compound recommended by the cleaning compound manufacturer;[P]

(iii) Rub together vigorously for at least 10 to 15 seconds while:

(I) Paying particular attention to removing soil from underneath the fingernails during the cleaning procedure,[P] and

(II) Creating friction on the surfaces of the hands and arms or surrogate prosthetic devices for hands and arms, finger tips, and areas between the fingers;[P]

(iv) Thoroughly rinse under clean, running warm water;[P] and

(v) Immediately follow the cleaning procedure with thorough drying using disposable paper towels, a continuous towel system, or a heated-air hand drying device.[P]

3. To avoid recontaminating their hands or surrogate prosthetic devices, food employees may use disposable paper towels or similar clean barriers when touching surfaces such as manually operated faucet handles on a handwashing sink or the handle of a restroom door.

4. If approved and capable of removing the types of soils encountered in the food operations involved, an automatic handwashing facility may be used by food employees to clean their hands or surrogate prosthetic devices.

(c) When to Wash.

1. Food employees shall clean their hands and exposed portions of their arms immediately before engaging in food preparation including working with exposed food, clean equipment and utensils, and unwrapped single-service and single-use articles[P] and:

   (i) After touching bare human body parts other than clean hands and clean, exposed arms;[P]

   (ii) After using the toilet room;[P]

   (iii) After caring for or handling service animals or aquatic animals;[P]

   (iv) After coughing, sneezing, using a handkerchief or disposable tissue, using tobacco, eating, or drinking, except for drinking from a closed beverage container and the container is handled to prevent contamination of the hands;[P]

   (v) After handling soiled equipment or utensils;[P]

   (vi) During food preparation, as often as necessary to remove soil and contamination and to prevent cross contamination when changing tasks;[P]

   (vii) When switching between working with raw food and working with ready-to-eat food;[P]

   (viii) Before donning gloves to initiate a task that involves working with food;[P] and

   (ix) After engaging in other activities that contaminate the hands.[P]

2. All employees shall wash hands before leaving the restroom. All food employees leaving the restroom shall wash their hands again upon re-entering the food preparation area.[P]

(d) Where to Wash. Food employees shall clean their hands in a handwashing sink or approved automatic handwashing facility and may not clean their hands in a sink used for food preparation or warewashing, or in a service sink or curbed cleaning facility used for the disposal of mop water and similar liquid waste.[Pf]

(e) Hand Antiseptics.

1. A hand antiseptic used as a topical application, a hand antiseptic solution used as a hand dip, or a hand antiseptic soap shall:

(i) Comply with one of the following:

(I) Be an approved drug that is listed in the FDA publication, "Approved Drug Products with Therapeutic Equivalence Evaluations" as an approved drug based on safety and effectiveness,[Pf] or

(II) Have active antimicrobial ingredients that are listed in the FDA monograph for OTC Health-Care Antiseptic Drug Products as an antiseptic handwash,[Pf] and

(ii) Consist only of components which the intended use of each complies with one of the following:

(I) A threshold of regulation exemption as specified in 21 CFR 170.39 - Threshold of regulation for substances used in food-contact articles,[Pf] or

(II) 21 CFR 178 - Indirect Food Additives: Adjuvants, Production Aids, and Sanitizers as regulated for use as a food additive with conditions of safe use,[Pf] or

(III) A determination of generally recognized as safe (GRAS). Partial listings of substances with food uses that are GRAS may be found in 21 CFR 182 - Substances Generally Recognized as Safe, 21 CFR 184 - Direct Food Substances Affirmed as Generally Recognized as Safe, or 21 CFR 186 - Indirect Food Substances Affirmed as Generally Recognized as Safe for use in contact with food; and in FDA's Inventory of GRAS Notices,[Pf] or

(IV) A prior sanction listed under 21 CFR 181 - Prior Sanctioned Food Ingredients,[Pf] or

(V) A Food Contact Notification that is effective,[Pf] and

(iii) Be applied only to hands that are clean.[Pf]

2. If a hand antiseptic or a hand antiseptic solution used as a hand dip does not meet the criteria specified under paragraph 1(ii) of this subsection, use shall be:

   (i) Followed by thorough hand rinsing in clean water before hand contact with food or by the use of gloves; [Pf] or

   (ii) Limited to situations that involve no direct contact with food by the bare hands.[Pf]

3. A hand antiseptic solution used as a hand dip shall be maintained clean and at a strength Equivalent to at least 100 mg/L chlorine.[Pf]

(f) Fingernails. Employees shall keep their fingernails clean and trimmed to no longer than the tips of the fingers.[Pf] Unless wearing gloves in good repair, a food employee may not wear fingernail polish or artificial fingernails when working with exposed food.[Pf]

(g) Jewelry. Except for a plain ring such as a wedding band food employees may not wear jewelry including medical information jewelry on their arms and hands while preparing food.

(h) Clothing. The outer layer of clothing of all employees shall be clean. Food employees shall wear clean outer clothing to prevent contamination of food, equipment, utensils, linen, and single-service and single-use articles.

(i) Hair Restraints.

1. Employees preparing or handling food shall use effective and clean, disposable or easily cleanable nets or other hair restraints approved by the Health Authority, worn properly to restrain loose hair including beards and mustaches longer than one half inch.

2. This does not apply to employees such as counter staff who only serve beverages and wrapped or packaged foods, hostesses, and wait staff if they present a minimal risk of contaminating exposed food, clean utensils and linens and unwrapped single-service and single-use articles.

   1. A statement of the proposed variance of the Chapter requirement citing relevant rule and subsection numbers;[Pf]

2. An analysis of the rationale for how the potential public health hazards and nuisances addressed by the relevant rules and subsections will be alternatively addressed by the proposal;[Pf] and

3. A HACCP plan if required that includes the information specified under DPH Rule 511-6-1-.02(8) as it is relevant to the variance requested.[Pf]

(c) Conformance with Approved Procedures. If the Department grants a variance as specified in subsection (5)(a) of this Rule, or a HACCP plan is otherwise required as specified under DPH Rule 511-6-1-.02(7), the permit holder shall:

1. Comply with the HACCP plans and procedures that are submitted and deemed in conformance with DPH Rule 511-6-1-.02(8)(a) through (e) as a basis for the modification or waiver;[P] and

2. Maintain and provide to the Department, upon request, records specified under DPH Rule 511-6-1-.02(8) that demonstrate that the following are routinely employed;

(i) Procedures for monitoring the critical control points,[Pf]

(ii) Monitoring of the critical control points,[Pf]

(iii) Verification of the effectiveness of the operation or process,[Pf] and

(iv) Necessary corrective actions if there is failure at a critical control point.[Pf]

Cite as Ga. Comp. R. & Regs. R. 511-6-1-.03
Authority: O.C.G.A. §§ 26-2-373, 379, 31-2A-6.
History. Original Rule entitled "Management and Personnel" adopted. F. Oct. 9, 2015; eff. Oct. 29, 2015.
Amended: F. Jan. 25, 2023; eff. Feb. 24, 2023, as specified by the Agency.

Rule 511-6-1-.04. Food.

(1) Condition. Food shall be safe, unadulterated, and honestly presented.[P]

(2) Source.

(a) Compliance with Food Law.

1. Food shall be obtained from sources that comply with law.[P]

2. Food prepared in a private home or received from a consumer may not be used or offered for human consumption in a food service establishment.[P]

3. Packaged food shall be labeled as specified in law, including 21 CFR 101 Food Labeling, 9 CFR 317 Labeling, Marking Devices, and Containers, and 9 CFR 381 Subpart N Labeling and Containers, and as specified under subsections (3)(g) and (3)(h) of this Rule.[Pf]

4. Fish, other than molluscan shellfish, that are intended for consumption in their raw or undercooked form may be offered for sale or service in a food service establishment not serving a highly susceptible population if they are obtained from a supplier that freezes the fish to destroy parasites or frozen on the premises and records are retained.

5. Whole-muscle, intact beef steaks that are intended for consumption in an undercooked form without a consumer advisory shall be:

   (i) Obtained from a food processing plant that, upon request by the purchaser, packages the steaks and labels them, to indicate that the steaks meet the definition of whole-muscle, intact beef,[Pf] or

   (ii) Deemed acceptable by the Health Authority based on other evidence, such as written buyer specifications or invoices, that indicates that the steaks meet the definition of whole-muscle, intact beef,[Pf] and

   (iii) If individually cut in a food service establishment:

      (I) Cut from whole-muscle intact beef that is labeled by a food processing plant as specified in paragraph 5(i) of this subsection or identified as specified in paragraph 5(ii) of this subsection,[Pf]

      (II) Prepared so they remain intact,[Pf] and

      (III) If packaged for undercooking in a food service establishment, labeled as specified in paragraph 5(i) of this subsection or identified as specified in paragraph 5(ii) of this subsection.[Pf]

6. Meat and poultry that is not a ready-to-eat food, and is in a packaged form when it is offered for sale or otherwise offered for consumption, shall be labeled to include safe handling instructions as specified in law, including 9 CFR 317.2(l) and 9 CFR 381.125(b).

7. Eggs that have not been specifically treated to destroy all viable Salmonellae shall be labeled to include safe handling instructions as specified in law, including 21 CFR 101.17(h).

(b) Food Received in a Hermetically Sealed Container. Food received in a hermetically sealed container shall be obtained from a food processing plant that is regulated by the food regulatory agency that has jurisdiction over the plant.[P]

(c) Fluid Milk and Milk Products. Fluid milk and milk products shall be obtained from sources that comply with grade A standards as specified in law.[P]

(d) Fish. Fish that are received for sale or service shall be commercially and legally caught or harvested; or approved for sale or service.[P]

(e) Molluscan Shellfish.

1. Molluscan shellfish shall be obtained from sources according to law and the requirements specified in the U.S. Department of Health and Human Services, Public Health Service, Food and Drug Administration, National Shellfish Sanitation Program Guide for the Control of Molluscan Shellfish.[P]

2. Molluscan shellfish received in interstate commerce shall be from sources that are listed in the Interstate Certified Shellfish Shippers List.[P]

3. Molluscan shellfish that are recreationally caught may not be received for sale or service.[P]

(f) Wild Mushrooms.

1. Except as specified in paragraph 2 of this subsection, mushroom species picked in the wild shall not be offered for sale or service by a food establishment unless the food service establishment has been approved to do so.[P]

2. This subsection does not apply to:

(i) Cultivated wild mushroom species that are grown, harvested, and processed in an operation that is regulated by the food regulatory agency that has jurisdiction over the operation; or

(ii) Wild mushroom species if they are in packaged form and are the product of a food processing plant that is regulated by the food regulatory agency that has jurisdiction over the plant.

(g) Game Animals.

1. Game animals are received for sale or service shall be:

   (i) Commercially raised for food[P] and:

      (I) Raised, slaughtered, and processed under a voluntary inspection program that is conducted by the agency that has animal health jurisdiction,[P] or

      (II) Under a routine inspection program conducted by a regulatory agency other than the agency that has animal health jurisdiction,[P] and

      (III) Raised, slaughtered, and processed according to:

         I. Laws governing meat and poultry as determined by the agency that has animal health jurisdiction and the agency that conducts the inspection program,[P] and

         II. Requirements which are developed by the agency that has animal health jurisdiction and the agency that conducts the inspection program with consideration of factors such as the need for antemortem and postmortem examination by an approved veterinarian or veterinarian's designee;[P]

   (ii) Under a voluntary inspection program administered by the USDA for game animals such as exotic animals (reindeer, elk, deer, antelope, water buffalo, or bison) that are "inspected and approved" in accordance with 9 CFR 352 Exotic animals; voluntary inspection or rabbits that are "inspected and certified" in accordance with 9 CFR 354 voluntary inspection of rabbits and edible products thereof;[P]

   (iii) As allowed by law, for wild game animals that are live-caught:

      (I) Under a routine inspection program conducted by a regulatory agency such as the agency that has animal health jurisdiction,[P] and

      (II) Slaughtered and processed according to:

         (A) Laws governing meat and poultry as determined by the agency that has animal health jurisdiction and the agency that conducts the inspection program,[P] and

I. Requirements which are developed by the agency that has animal health jurisdiction and the agency that conducts the inspection program with consideration of factors such as the need for antemortem and postmortem examination by an approved veterinarian or veterinarian's designee;[P] or

II. As allowed by law, for field-dressed wild game animals under a routine inspection program that ensures the animals:

(I) Receive a postmortem examination by an approved veterinarian or veterinarian's designee,[P] or

(II) Are field-dressed and transported according to requirements specified by the agency that has animal health jurisdiction and the agency that conducts the inspection program,[P] and

(III) Are processed according to laws governing meat and poultry as determined by the agency that has animal health jurisdiction and the agency that conducts the inspection program.[P]

2. A game animal may not be received for sale or service if it is a species of wildlife that is listed in 50 CFR 17 Endangered and threatened wildlife and plants.

(3) Specifications for Receiving.

(a) Temperature.

1. Except as specified in paragraph 2 of this subsection, refrigerated, time/temperature control for safety food shall be at a temperature of 41°F (5°C) or below when received.[P]

2. If a temperature other than 41°F (5°C) for a time/temperature control for safety food is specified in law governing its distribution, such as laws governing milk and molluscan shellfish, the food may be received at the specified temperature.

3. Raw eggs shall be received in refrigerated equipment that maintains an ambient air temperature of 45°F (7°C) or less.[P]

4. Time/temperature control for safety food that is cooked and received hot shall be at a temperature of 135°F (57°C) or above.[P]

5. A food that is labeled frozen and shipped frozen by a food processing plant shall be received frozen.[Pf]

6. Upon receipt, time/temperature control for safety food shall be inspected to ensure that there is no evidence of previous temperature abuse.[Pf]

(b) Additives. Food may not contain unapproved food additives or additives that exceed amounts specified in 21 CFR 170-180 relating to food additives, generally recognized as safe or prior sanctioned substances that exceed amounts specified in 21 CFR 181-186, substances that exceed amounts specified in 9 CFR Subpart C Section 424.21(b) Food ingredients and sources of radiation, or pesticide residues that exceed provisions specified in 40 CFR 180 Tolerances for pesticides chemicals in food, and exceptions.[P]

(c) Eggs. Eggs shall be received clean and sound and may not exceed the restricted egg tolerances for U.S. Consumer Grade B as specified in United States Standards, Grades, and Weight Classes for Shell Eggs, AMS 56.200 et seq., administered by the Agricultural Marketing Service of USDA.[P]

(d) Eggs and Milk Products, Pasteurized.

1. Egg products shall be obtained pasteurized.[P]

2. Fluid and dry milk and milk products shall:

   (i) Be obtained pasteurized;[P] and

   (ii) Comply with Grade A standards as specified in law.[P]

3. Frozen milk products, such as ice cream, shall be obtained pasteurized as specified in 21 CFR 135 - Frozen desserts.[P]

4. Cheese shall be obtained pasteurized unless alternative procedures to pasteurization are specified in 21 CFR 133 - Cheeses and related cheese products, for curing certain cheese varieties.[P]

(e) Package Integrity. Food packages shall be in good condition and protect the integrity of the contents so that the food is not exposed to adulteration or potential contaminants.[Pf]

(f) Ice. Ice for use as a food or a cooling medium shall be made from drinking water.[P]

(g) Shucked Shellfish, Packaging and Identification.

1. Raw shucked shellfish shall be obtained in nonreturnable packages which bear a legible label that identifies the:[Pf]

   (i) Name, address, and certification number of the shucker, packer, or repacker of the molluscan shellfish;[Pf] and

   (ii) The "sell by" or "best if used by" date for packages with a capacity of less than one-half gallon (1.89 L) or the date shucked for packages with a capacity of one-half gallon (1.89 L) or more.[Pf]

2. A package of raw shucked shellfish that does not bear a label or which bears a label which does not contain all the information as specified under paragraph 1 of this subsection shall be subject to a hold order, as allowed by law, or seizure and destruction in accordance with 21 CFR Subpart D - Specific Administrative Decisions Regarding Interstate Shipments, Section 1240.60(d) Molluscan shellfish.

(h) Shellstock Identification.

1. Shellstock shall be obtained in containers bearing legible source identification tags or labels that are affixed by the harvester or dealer that depurates, ships, or reships the shellstock, as specified in the National Shellfish Sanitation Program Guide for the Control of Molluscan Shellfish, and that list:[Pf]

   (i) Except as specified under paragraph 3 of this subsection, on the harvester's tag or label, the following information in the following order:[Pf]

      (I) The harvester's identification number that is assigned by the shellfish control authority,[Pf]

      (II) The date of harvesting,[Pf]

      (III) The most precise identification of the harvest location or aquaculture site that is practicable based on the system of harvest area designations that is in use by the shellfish

control authority and including the abbreviation of the name of the state or country in which the shellfish are harvested,[Pf]

(IV) The type and quantity of shellfish,[Pf] and

(V) The following statement in bold, capitalized type: "This tag is required to be attached until container is empty or retagged and thereafter kept on file for 90 days;"[Pf] and

(ii) Except as specified in paragraph 4 of this subsection, on each dealer's tag or label, the following information in the following order:[Pf]

(I) The dealer's name and address, and the certification number assigned by the shellfish control authority,[Pf]

(II) The original shipper's certification number including the abbreviation of the name of the state or country in which the shellfish are harvested,[Pf]

(III) The same information as specified for a harvester's tag under paragraphs 1(i)(II) through (IV) of this subsection,[Pf] and

(IV) The following statement in bold, capitalized type: "This tag is required to be attached until container is empty and thereafter kept on file for 90 days.[Pf]

2. A container of shellstock that does not bear a tag or label or that bears a tag or label that does not contain all the information as specified under paragraph 1 of this subsection shall be subject to a hold order, as allowed by law, or seizure and destruction in accordance with 21 CFR Subpart D - Specific Administrative Decisions Regarding Interstate Shipments, Section 1240.60(d).

3. If a place is provided on the harvester's tag or label for a dealer's name, address, and certification number, the dealer's information shall be listed first.

4. If the harvester's tag or label is designed to accommodate each dealer's identification as specified under paragraphs 1(ii)(I) and (II) of this subsection, individual dealer tags or labels need not be provided.

(i) Shellstock, Condition. When received by a food service establishment, shellstock shall be reasonably free of mud, dead shellfish, and shellfish with broken shells. Dead shellfish or shellstock with badly broken shells shall be discarded.

(j) Juice Treated. Pre-packaged juice shall:

1. Be obtained from a processor with a HACCP system as specified in 21CFR Part 120 Hazard Analysis and Critical Control (HACCP) Systems;[Pf] and

2. Be obtained pasteurized or otherwise treated to attain a 5-log reduction of the most resistant microorganism of public health significance as specified in 21 CFR Part 120.24 Process Controls.[P]

(k) Molluscan Shellfish, Original Container.

1. Except as specified in paragraphs 2 through 4 of this subsection, Molluscan shellfish may not be removed from the container in which they are received until immediately before sale or preparation for service.

2. For display purposes, shellstock may be removed from the container in which they are received, displayed on drained ice, or held in a display container, and a quantity specified by a consumer may be removed from the display or display container and provided to the consumer if:

   (i) The source of the shellstock on display is identified and recorded; and

   (ii) The shellstock are protected from contamination.

3. Shucked shellfish may be removed from the container in which they were received and held in a display container from which individual servings are dispensed upon a consumer's request if:

   (i) The labeling information for the shellfish on display is retained and correlated to the date when, or dates during which, the shellfish are sold or served; and

   (ii) The shellfish are protected from contamination.

4. Shucked shellfish may be removed from the container in which they were received and repacked in consumer self service containers where allowed by law if:

   (i) The labeling information for the shellfish is on each consumer self service container;

(ii) The labeling information is retained and correlated with the date when, or dates during which, the shellfish are sold or served;

(iii) The labeling information and dates specified under paragraph 4(ii) of this subsection are maintained for 90 days; and

(iv) The shellfish are protected from contamination.

(l) Shellstock, Maintaining Identification.

1. Except as specified under paragraphs 3 (ii) of this subsection, shellstock tags shall remain attached to the container in which the shellstock are received until the container is empty.[Pf]

2. The date when the last shellstock from the container is sold or served shall be recorded on the tag or label.[Pf]

3. The identity of the source of shellstock that are sold or served shall be maintained by retaining shellstock tags or labels for 90 calendar days from the date that is recorded on the tag or label, as specified under paragraph 2 of this subsection, by:[Pf]

   (i) Using an approved record keeping system that keeps the tags or labels in chronological order correlated to the date when, or dates during which, the shellstock are sold or served; and

   (ii) If shellstock are removed from their tagged or labeled container:

      (I) Preserving source identification by using a record keeping system that keeps the tags or labels in chronological order correlated to the date when, or dates during which, the shellstock are sold or served,[Pf] and

      (II) Ensuring that shellstock from one tagged or labeled container are not commingled with shellstock from another container with different certification numbers; different harvest dates; or different growing areas as identified on the tag or label before being ordered by the consumer.[PF]

(m) After Business Hours of Operations - Key Drop Deliveries. The Health Authority may allow a food service establishment to receive deliveries after the business hours of the operation, if the following criterion is found to be in compliance by the Health Authority:

1. The permit holder or person in charge of the food service establishment notifies the local Health Authority that key drop deliveries will be received after its business operating hours;[Pf]

2. For purposes of enforcing this Chapter, an entity performing work under contract for the establishment shall be considered to be an employee of the establishment as defined in DPH Rule 511-6-1-.01(45);[Pf]

3. The business entity providing key drop deliveries to the establishment shall certify in writing to the establishment that the products delivered will be under its control throughout the delivery process to the establishment, and that all products will be delivered to the establishment during the key drop delivery hours pursuant to the secured access arrangement set by the food service establishment complies with paragraphs 4, 5 and 6 of this subsection;[Pf] and

4. The entity providing the key drop deliveries shall ensure that all products are stored within the food service establishment and not left on loading docks or in an area accessible by the public. Food products shall be stored in compliance with applicable provisions of DPH Rule 511-6-1-.04 and as follows:[P]

   (i) Food products requiring temperature control for safety shall be immediately stored within approved temperature control storage equipment verified by the food service establishment management that is capable of maintaining food product temperatures of:[P]

      (I) 41ºF (5ºC) or less, if held cold;[P] or

      (II) 135ºF (57ºC) or higher if held hot;[P] or

      (III) frozen if delivered frozen;[P] and

   (ii) All food shall be placed within appropriate storage facilities of the establishment to maintain food safety and security so as to protect against contamination and adulteration;[Pf]

5. The food service establishment shall maintain records of the written agreement as specified in subsection (3)(m)3 of this Rule as well as records that show the delivery condition and temperature of the products upon receipt of delivery. Records shall be made available upon request by the Health Authority;[Pf] and

6. Receipt of delivery by the food service establishment must be immediately verified by its employees.[Pf]

(4) Protection From Contamination After Receiving.

(a) Preventing Contamination from Hands.

1. Food employees shall wash their hands as specified under DPH Rule 511-6-1-.03(5).

2. Except when washing fruits and vegetables or as specified under subsection (a)4, food employees shall not contact exposed, ready-to-eat food with their bare hands and shall use suitable utensils such as deli tissue, spatulas, tongs, single-use gloves, or dispensing equipment.[P]

3. Food employees shall minimize bare hand and arm contact with exposed food that is not in a ready-to-eat form.[Pf]

4. Paragraph (a)2. of this subsection does not apply to a food employee that contacts exposed, ready-to-eat food with bare hands at the time the ready-to-eat food is being added as an ingredient to a food that:

(i) contains a raw animal food and is to be cooked in the food service establishment to heat all parts of the food to at least the minimum time/temperatures specified in DPH Rule 511-6-1-.04(5)(a)1 and 2 and DPH Rule 511-6-1-.04(5)(b);[P] or

(ii) does not contain a raw animal food but is to be cooked in the food service establishment to heat all parts of the food to a time/temperature of at least 145°F (63°C);[P] and

(iii) the ready-to-eat food must be identified for cooking use only and kept separate from other ready-to-eat food that will not be cooked as specified in paragraphs 4. (i) and (ii) of this subsection.[Pf]

(b) Preventing Contamination When Tasting. A food employee may not use a utensil more than once to taste food that is to be sold or served.[P]

(c) Packaged and Unpackaged Food - Separation, Packaging, and Segregation.

1. Food shall be protected from cross contamination by:

(i) Except as specified in paragraph (i)(III) of this subsection, separating raw animal foods during storage, preparation, holding, and display from:

(I) Raw ready-to-eat food including other raw animal food such as fish for sushi or molluscan shellfish, or other raw ready-to-eat food such as fruits and vegetables,[P] and

(II) Cooked ready-to-eat food;[P] and

(III) Frozen, commercially processed and packaged raw animal food may be stored or displayed with or above frozen, commercially processed and packaged, ready-to-eat food.

(ii) Except when combined as ingredients, separating types of raw animal foods from each other such as beef, fish, lamb, pork, and poultry during storage, preparation, holding, and display by:

(I) Using separate equipment for each type,[P] or

(II) Arranging each type of food in equipment so that cross contamination of one type with another is prevented,[P] and

(III) Preparing each type of food at different times or in separate areas;[P]

(iii) Cleaning and sanitizing equipment and utensils;

(iv) Except as specified under paragraph 2. of this subsection and when cooling as specified in DPH Rule 511-6-1-.04(6)(e)2.(ii), storing the food in packages, covered containers, or wrappings, except for loosely covered or uncovered containers in which food is being cooled if protected from overhead contamination;

(v) Cleaning hermetically sealed containers of food of visible soil before opening;

(vi) Protecting food containers that are received packaged together in a case or overwrap from cuts when the case or overwrap is opened;

(vii) Storing damaged, spoiled, or recalled food being held in the food service establishment separate from food, equipment, utensils, linens and single-service and single-use articles; or

(viii) Separating fruits and vegetables, before they are washed from ready-to-eat food.

2. The requirement in paragraph 1(iv) of this subsection does not apply to:

(i) Whole, uncut, raw fruits and vegetables and nuts in the shell that require peeling or hulling before consumption;

(ii) Primal cuts, quarters, or sides of raw meat or slab bacon that are hung on clean, sanitized hooks or placed on clean, sanitized racks;

(iii) Whole, uncut, processed meats such as country hams, and smoked or cured sausages that are placed on clean, sanitized racks;

(iv) Food being cooled in cooling or cold holding equipment loosely covered, or uncovered if protected from overhead contamination; or

(v) Shellstock.

(d) Food Storage Containers, Identified with Common Name of Food. Except for containers holding food that can be readily and unmistakably recognized, such as dry pasta, working containers holding food or food ingredients that are removed from their original packages for use in the food establishment, such as cooking oils, flour, herbs, potato flakes, salt, spices, and sugar shall be clearly and legibly identified, in English, with the common name of the food.

(e) Pasteurized Eggs, Substitute for Raw Eggs for Certain Recipes. Pasteurized eggs or egg products shall be substituted for raw eggs in the preparation of foods such as Caesar salad, hollandaise or Béarnaise sauce, mayonnaise, meringue, eggnog, ice cream, and egg-fortified beverages if raw eggs are not cooked to the required temperatures specified under subsection (5)(a)1(i) or (ii) of this Rule or served with a consumer advisory in a food establishment that serves a population that is not a highly susceptible population.

(f) Protection from Unapproved Additives.

1. As specified in subsection (3)(b) of this Rule, food shall be protected from contamination that may result from the addition of:

   (i) Unsafe or unapproved food or color additives;[P] and

   (ii) Unsafe or unapproved levels of approved food and color additives.[P]

2. A food employee may not:

   (i) Apply sulfiting agents to fresh fruits and vegetables intended for raw consumption or to a food considered to be a good source of vitamin B1;[P] or

   (ii) Except for grapes, serve or sell food specified under paragraph 2(i) of this subsection that is treated with sulfiting agents before receipt by the food service establishment.[P]

(g) Washing Fruits and Vegetables.

1. Except as specified in paragraphs (g)2 and 3 of this subsection and except for whole, raw fruits and vegetables that are intended for washing by the consumer before consumption, raw fruits and vegetables shall be thoroughly washed in water, in a sink designated for that purpose only, to remove soil and other contaminants before being cut, combined with other ingredients, cooked, served, or offered for human consumption in ready-to-eat form.

2. Fruits and vegetables may be washed by using chemicals as specified under DPH Rule 511-6-1-.07(6)(h).

3. Ready-to-eat food such as potatoes, soups, chili, sauces, etc., may be thawed, rehydrated, or cooled after cooking in the sink if the sink is cleaned and sanitized before ready-to-eat food is placed in the sink and again before washing whole, raw fruits and vegetables. This does not apply to ready to-eat-food that is served as raw or undercooked animal foods.

4. Devices used for on-site generation of chemicals meeting the requirements specified in 21 CFR 173.315, Chemicals used in the washing or to assist in the peeling of fruits and vegetables, for the washing of raw, whole fruits and vegetables shall be used in accordance with the manufacturer's instructions.[Pf]

(h) Ice Used as Exterior Coolant, Prohibited as Ingredient. Ice may not be used as food after it has been used as a medium for cooling the exterior surfaces of food such as melons or fish, packaged foods such as canned beverages, or cooling coils and tubes of equipment.[P]

(i) Storage or Display of Food in Contact with Water or Ice.

1. Packaged food may not be stored in direct contact with ice or water if the food is subject to the entry of water because of the nature of its packaging, wrapping, or container or positioning in the ice or water.

2. Except as specified in paragraphs 3 and 4 of this subsection, unpackaged food may not be stored in direct contact with undrained ice.

3. Whole, raw fruits or vegetables; cut, raw vegetables such as celery or carrot sticks or cut potatoes; and tofu may be immersed in ice or water.

4. Raw poultry and raw fish that are received immersed in ice in shipping containers may remain in that condition while in storage awaiting preparation, display, service, or sale.

(j) Food Contact with Equipment and Utensils. Food shall only contact surfaces of:

1. Equipment and utensils that are cleaned and sanitized as specified under DPH Rule 511-6-1-.05(7) and (8);[P] or

2. Single-service and single-use articles;[P] or

3. Linens, such as cloth napkins, that have been laundered as specified under DPH Rule 511-6-1-.05(9).

(k) Storage of In-Use Utensils. During pauses in food preparation or dispensing, food preparation and dispensing utensils shall be stored:

1. Except as specified under paragraph 2 of this subsection, in the food with their handles above the top of the food and the container;

2. In food that is not time/temperature control for safety food with their handles above the top of the food within containers or equipment that can be closed, such as bins of sugar, flour, or cinnamon;

3. On a clean portion of the food preparation table or cooking equipment only if the in-use utensil and the food-contact surface of the food preparation table or cooking equipment are cleaned and sanitized at a frequency specified under DPH Rule 511-6-1-.05(7)(b) and (8)(a);

4. In running water of sufficient velocity to flush particulates to the drain, if used with moist food such as ice cream or mashed potatoes;

5. In a clean, protected location if the utensils, such as ice scoops, are used only with a food that is not time/temperature control for safety food; or

6. In a container of water if the water is maintained at a temperature of at least 135°F (57°C) and the container is cleaned at a frequency specified under DPH Rule 511-6-1-.05(7)(b)3(vi).

(l) Linens and Napkins, Use Limitation. Linens, such as cloth napkins, may not be used in contact with food unless they are used to line a container for the service of foods and the linens and napkins are replaced each time the container is refilled for a new consumer.

(m) Wiping Cloths, Use Limitation.

1. Cloths in-use for wiping food spills from tableware and carry-out containers that occur as food is being served shall be:

(i) Maintained dry; and

(ii) Used for no other purpose.

2. Cloths in-use for wiping counters and other equipment surfaces shall be:

   (i) Held between uses in a chemical sanitizer solution at a concentration specified under DPH Rule 511-6-1-.05(6)(n); and

   (ii) Laundered daily.

3. Cloths in-use for wiping surfaces in contact with raw animal foods shall be kept separate from cloths used for other purposes.

4. Dry wiping cloths and the chemical sanitizing solutions in which wet wiping cloths are held between uses shall be free of food debris and visible soil.

5. Containers of chemical sanitizing solutions in which wet wiping cloths are held between uses shall be stored off the floor and used in a manner that prevents contamination of food, equipment, utensils, linens, single-service, or single-use articles.

6. Single-use disposable sanitizer wipes shall be used in accordance with EPA-approved manufacturer's label use instructions.

(n) Gloves, Use Limitation.

1. If used, single-use gloves shall be used for only one task such as working with ready-to-eat food or with raw animal food, used for no other purpose, and discarded when damaged or soiled, or when interruptions occur in the operation.[P]

2. Except as specified in paragraph 3 of this subsection, slash-resistant gloves that are used to protect the hands during operations requiring cutting shall be used in direct contact only with food that is subsequently cooked as specified under subsection (5) such as frozen food or a primal cut of meat.

3. Slash-resistant gloves may be used with ready-to-eat food that will not be subsequently cooked if the slash-resistant gloves have a smooth, durable, and nonabsorbent outer surface; or if the slash-resistant gloves are covered with a smooth, durable, nonabsorbent glove, or a single-use glove.

4. Cloth gloves may not be used in direct contact with food unless the food is subsequently cooked, such as frozen food or a primal cut of meat.

(o) Using Clean Tableware for Second Portions and Refills.

1. Except for refilling a consumer's drinking cup or container without contact between the pouring utensil and the lip-contact area of the drinking cup or

container, food employees may not use tableware, or single-service articles, soiled by the consumer, to provide second portions or refills.

2. Except as specified in paragraph 3 of this subsection, self-service consumers may not be allowed to use soiled tableware, including single-service articles, to obtain additional food from the display and serving equipment.

3. Drinking cups and containers may be reused by self-service consumers if refilling is a contamination-free process.

(p) Refilling Returnables.

1. Except as specified in paragraphs 2. and 5. of this subsection, empty containers returned to a food service establishment for cleaning and refilling with food shall be cleaned and refilled in a regulated food processing plant.

2. A take-home food container returned to a food service establishment may be refilled at a food service establishment with food if the food container is:

   (i) Designed and constructed for reuse and in accordance with the requirements as specified in DPH Rule 511-6-1-.05(1) and (2);[P]

   (ii) One that was initially provided by the food service establishment to the consumer, either empty or filled with food by the food service establishment, for the purpose of being returned, for reuse;

   (iii) Returned to the food service establishment by the consumer after use;

   (iv) Visually inspected by a food employee to verify that the container, as returned meets the requirements in DPH Rule 511-6-1-.05(1) and (2), and is cleaned and sanitized before being refilled with food[P]; and

3. A take-home food container returned to a food service establishment may be refilled at a food service establishment with beverage if:

   (i) The beverage is not a Time/Temperature Control for Safety Food;

   (ii) The design of the container and of the rinsing equipment and the nature of the beverage, when considered together, allow effective cleaning at home or in the food service establishment;

   (iii) Facilities for rinsing before refilling returned containers with fresh, hot water that is under pressure and not recirculated are provided as

part of the dispensing system or by the food service establishment if the consumer is notified by signage;

(iv) The consumer-owned container returned to the food service establishment for refilling is refilled for sale or service only to the same consumer; and

(v) The container is refilled by:

(I) An employee of the establishment, or

(II) The owner of the container if the beverage system includes a contamination-free transfer process as specified under DPH Rule 511-6-1-.05(2)(p)1., 2., and 4. that cannot be bypassed by the container owner.

4. Consumer-owned, personal take-out beverage containers, such as thermally insulated bottles, nonspill coffee cups, and promotional beverage glasses, may be refilled by employees or the consumer if refilling is a contamination-free process as specified under DPH Rule 511-6-16-1-.05(2)(p)1., 2., and 4.

5. Consumer-owned containers that are not food-specific may be filled at a water vending machine or system.

(q) Food Storage.

1. Except as specified in paragraphs 2 and 3 of this subsection, food shall be protected from contamination by storing the food:

(i) In a clean, dry location;

(ii) Where it is not exposed to splash, dust, or other contamination; and

(iii) At least 6 inches (15 cm) above the floor.

2. Food in packages and working containers may be stored less than 6 inches (15 cm) above the floor on case lot handling equipment if the equipment can be moved by hand or by conveniently available apparatuses such as hand trucks and forklifts.

3. Pressurized beverage containers, cased food in waterproof containers such as bottles or cans, and milk containers in plastic crates may be stored on a floor that is clean and not exposed to floor moisture.

(r) Food Storage, Prohibited Areas. Food may not be stored in the following areas:

1. Locker rooms;
2. Toilet rooms;
3. Dressing rooms;
4. Garbage rooms;
5. Mechanical rooms;
6. Under sewer lines that are not shielded to intercept potential drips;
7. Under leaking water lines, including leaking automatic fire sprinkler heads, or under lines on which water has condensed;
8. Under open stairwells; or
9. Under other sources of contamination.

(s) Vended Time/Temperature Control for Safety Food, Original Container. Time/temperature control for safety food dispensed through a vending machine shall be in the package in which it was placed at the food service establishment or food processing plant at which it was prepared.

(t) Food Preparation. During preparation, unpackaged food shall be protected from environmental sources of contamination.

(u) Food Display.

1. Except for nuts in the shell and whole, raw fruits and vegetables that are intended for hulling, peeling, or washing by the consumer before consumption, food on display shall be protected from contamination by the use of packaging; counter, service line, or salad bar food guards, display cases, or other effective means.[P]
2. Protective devices for counters, serving lines, salad bars and other similar food displays in food service establishments shall be designed and constructed so as to intercept contaminants which may be expelled from the customer's mouth or nose.
3. All food, whether on display, being prepared for service or placed for consumer self-service must be protected from contamination from consumers standing or sitting within eight feet of the food, except that table side finishing as approved by the Health Authority and hibachi grills will be allowed when food preparation is for immediate service.

(v) Condiments, Protection.

1. Condiments shall be protected from contamination by being kept in dispensers that are designed to provide protection, protected food displays provided with the proper utensils, original containers designed for dispensing, or individual packages or portions.

2. Condiments at a vending machine location shall be in individual packages or provided in dispensers that are filled at an approved location, such as the food service establishment that provides food to the vending machine location, a food processing plant that is regulated by the agency that has jurisdiction over the operation, or a properly equipped facility that is located on the site of the vending machine location.

(w) Consumer Self-Service Operations.

1. Raw, unpackaged animal food, such as beef, lamb, pork, poultry, and fish may not be offered for consumer self-service. This paragraph does not apply to:

   (i) Consumer self-service of ready-to-eat foods at buffets or salad bars that serve foods such as sushi or raw shellfish;

   (ii) Ready-to-cook individual portions for immediate cooking and consumption on the premises such as consumer-cooked meats or consumer-selected ingredients for Mongolian barbecue; or

   (iii) Raw, frozen, shell-on shrimp, or lobster.

2. Consumer self-service operations for ready-to-eat foods shall be provided with suitable utensils or effective dispensing methods that protect the food from contamination.[Pf]

3. Clean tableware shall be provided to consumers returning to the self-service area for additional food. A public notice informing consumers to use clean tableware shall be posted in a conspicuous place in the self-service area. Beverage cups and glasses, and flatware including forks, knives and spoons are exempt from this requirement.[Pf]

4. When refilling containers of Time/Temperature Control for safety (TCS) foods on a self-service display, the new food product shall not be mixed with the old food product unless:

   (i) The displayed product is holding at 41°F or below or 135°F or above;[Pf] and

(ii) The self-service operation is being monitored by employees trained in safe operating procedures;[Pf] and

(iii) The date and time of the earliest food prepared shall either be marked on the container, or documented by an alternate method acceptable to the Health Authority.[Pf]

5. All unwrapped foods on a self-service buffet or salad bar shall be disposed of at the end of the business day or after a maximum of 24 hours. Written procedures for tracking the total accumulative time that unwrapped food is displayed shall be prepared in advance, maintained within the food service establishment, and made available to the Health Authority upon request. Those written procedures shall specify:[Pf]

   (i) How displayed foods will be identified;[Pf]

   (ii) How food shall be monitored in regards to tracking time during display for each food item;[Pf] and

   (iii) Corrective action to be taken should a total accumulative display time as specified in subsection (4)(w)5 above is exceeded.[Pf]

6. Family-style of self-service may be allowed in facilities that do not serve a highly susceptible population as long as the following provisions are met:[Pf]

   (i) The permit holder shall fully disclose how the family-style of service will be provided to consumers prior to their being seated for service. Disclosure shall be in the form of a prominently displayed sign containing descriptive language of a letter height of at least 1 inch so as to be easily readable by consumers at the location where consumers wait to be seated and then again, verbally by the host, hostess or server prior to consumers being seated;[Pf]

   (ii) A group of consumers will be seated at a table for one sitting;[Pf]

   (iii) Each container of food shall have its own serving utensils as required within paragraph 2 of this subsection;[Pf]

   (iv) All food will be placed in bulk on a table, and served to only one sitting of people;[Pf]

   (v) Any food served to a consumer shall not later be offered as food for human consumption to other consumers.[Pf]

(x) Returned Food and Re-Service of Food.

1. Except as specified in paragraph 2 of this subsection, after being served or sold and in the possession of a consumer, food that is unused or returned by the consumer may not be offered as food for human consumption.[P]

2. Except for food served to patients or clients who are under contact precautions or protective environment isolation in a facility serving a highly susceptible population, a container of food that is not time/temperature control for safety food may be re-served from one consumer to another if:

   (i) The food is dispensed so that it is protected from contamination and the container is closed between uses, such as a narrow-neck bottle containing catsup, steak sauce, or wine; or

   (ii) The food, such as crackers, salt, or pepper, is in an unopened original package and is maintained in sound condition.

(y) Outdoor Cooking and Service of Food.

1. For special events, foods requiring only cooking may be prepared, if served immediately, in an outside area on the premises of a permitted food service establishment. Prior approval must be obtained from the Health Authority.[P]

2. The presentation of food orders and limited table side finishing, such as tossing salad and flaming desserts, is permissible from a permitted food service establishment in an adjoining outdoor seating area. Outdoor salad bars or unenclosed dessert carts are prohibited.[P]

3. Outdoor barbeque pits or barbeque cookers may be allowed on the premises of a food service establishment with the approval of the Health Authority if the following requirements are met:[Pf]

   (i) The cooking equipment is used only for cooking bulk volume of meats and poultry such as hams, chicken or beef and not as a grill for cooking individual orders;[P]

   (ii) Within the food service establishment, all meats and poultry will be placed within clean and sanitized containers and then covered prior to being carried to the cooking equipment;[P]

   (iii) All of the meat and poultry will be placed at one time onto cooking surfaces of cooking equipment that has been preheated and then cooked as required in subsection (5) of this Rule. Once meats have completed the cooking process, they will be placed in a clean and sanitized food grade container, using separate utensils from handling raw meats and poultry and then covered and transported

into the food service establishment for further processing and service. No food preparation other than seasoning will be allowed at outdoor barbeque pits or barbeque cookers;[P]

(iv) Utensils and food shall not be left outside of the cooking equipment or outside of the food service establishment;[P]

(vi) Outdoor barbeque pits or barbeque cookers shall be protected with permanent overhead protection and placed on an easily cleanable surface such as smooth finished concrete;[Pf]

(vii) Outdoor barbeque pits or barbeque cookers shall be equipped with closable lids and kept closed except for cleaning and working with food such as turning and seasoning;[Pf]

(viii) The outside cooking area shall be designed and constructed so as to control the presence of vermin;[Pf] and

(ix) The outside cooking area shall be designed and constructed so as to facilitate the ease of routine cleaning and to promote good sanitation.[Pf]

(z) Miscellaneous Sources of Contamination. Food shall be protected from contamination that may result from a factor or source not specified under paragraphs (a) through (y) of this subsection.

(5) Pathogen Destruction.

(a) Raw Animal Foods.

1. Except as specified under paragraphs 2, 3 and 4 of this subsection, raw animal foods such as eggs, fish, meat, poultry, and foods containing these raw animal foods, shall be cooked to heat all parts of the food to a temperature and for a time that complies with one of the following methods based on the food that is being cooked:

(i) 145°F (63°C) or above for 15 seconds for:[P]

(I) Raw eggs that are broken and prepared in response to a consumer's order and for immediate service,[P] and

(II) Except as specified under paragraphs 1(ii) and (iii), 2, and 3 of this subsection, fish and meat including game animals commercially raised for food or under a voluntary inspection program;[P]

(ii) 155°F (68°C) for 15 seconds or the temperature specified in the following chart that corresponds to the holding time for ratites, mechanically tenderized, and injected meats; the following if they are comminuted: fish, meat, game animals raised for food, and commercially game animals or under a voluntary inspection program; and raw eggs that are not prepared to a consumer's order and for immediate service;[P] or

Minimum	
Temperature °F (°C)	Time
145 (63)	3 minutes
150 (66)	1 minute
158 (70)	<1 second (instantaneous)

(iii) 165°F (74°C) or above for 15 seconds for poultry, baluts, wild game animals, stuffed fish, stuffed meat, stuffed pasta, stuffed poultry, stuffed ratites, or stuffing containing fish, meat, poultry, or ratites.[P]

2. Whole meat roasts including beef, corned beef, lamb, pork, and cured pork roasts such as ham shall be cooked:

(i) In an oven that is preheated to the temperature specified for the roast's weight in the following chart and that is held at that temperature:[Pf]

Oven Type	Oven Temperature Based on Roast Weight	
	Less than 10 lbs (4.5 kg)	10 lbs (4.5 kg) or More
Still Dry	350°F (177°C) or more	250°F (121°C) or more
Convection	325°F (163°C) or more	250°F (121°C) or more
High Humidity[1]	250°F (121°C) or less	250°F (121°C) or less

[1]Relative humidity greater than 90% for at least 1 hour as measured in the cooking chamber or exit of the oven; or in a moisture-impermeable bag that provides 100% humidity.

and

(ii) As specified in the following chart, to heat all parts of the food to a temperature and for the holding time that corresponds to that temperature:[P]

Temperature °F (°C)	Time[1] in Minutes	Temperature °F (°C)	Time[1] in Seconds
130 (54.4)	112	147 (63.9)	134
131 (55.0)	89	149 (65.0)	85
133 (56.1)	56	151 (66.1)	54
135 (57.2)	36	153 (67.2)	34
136 (57.8)	28	155 (68.3)	22
138 (58.9)	18	157 (69.4)	14
140 (60.0)	12	158 (70.0)	0
142 (61.1)	8		
144 (62.2)	5		
145 (62.8)	4		
[1]Holding time may include postoven heat rise.			

3. A raw or undercooked whole-muscle, intact beef steak may be served or offered for sale in a ready-to-eat form if:

   (i) The food service establishment serves a population that is not a highly susceptible population, and

   (ii) The steak is labeled by the producer or supplier to indicate that it meets the definition of "whole-muscle, intact beef", and

   (iii) The steak is cooked on both the top and bottom to a surface temperature of 145°F (63°C) or above and a cooked color change is achieved on all external surfaces.

4. A raw animal food such as raw egg, raw fish, raw-marinated fish, raw molluscan shellfish, or steak tartare; or a partially cooked food such as lightly cooked fish, soft cooked eggs, or rare meat other than whole-muscle, intact beef steaks as specified in paragraph 3 of this subsection, may be served or offered for sale upon consumer request or selection in a ready-to-eat form if:

   (i) The food service establishment serves a population that is not a highly susceptible population; and

(ii) The food, if served or offered for service by consumer selection from a children's menu, does not contain comminuted meat,[Pf] and

(iii) The consumer is informed that to ensure its safety, the food should be cooked as specified under paragraphs 1 or 2 of this subsection; or

(iv) The Health Authority grants a variance from paragraphs 1 or 2 of this subsection as specified in DPH Rule 511-6-1-.10(5)(a) based on a HACCP plan that:

(I) Is submitted by the permit holder and granted as specified under DPH Rule 511-6-1-.10(5)(b), and

(II) Documents scientific data or other information showing that a lesser time and temperature regimen results in a safe food, and

(III) Verifies that equipment and procedures for food preparation and training of food employees at. the food service establishment meet the conditions of the variance.

(b) Microwave Cooking. Raw animal foods cooked in a microwave oven shall be:

1. Rotated or stirred throughout or midway during cooking to compensate for uneven distribution of heat;

2. Covered to retain surface moisture;

3. Heated to a temperature of at least 165°F (74°C) in all parts of the food;[P] and

4. Allowed to stand covered for 2 minutes after cooking to obtain temperature equilibrium.

(c) Plant Food Cooking for Hot Holding. Fruits and vegetables that are cooked for hot holding shall be cooked to a temperature of 135°F (57°C).[Pf]

(d) Non-Continuous Cooking of Raw Animal Foods. Raw animal foods that are cooked using a non-continuous cooking process shall be:

1. Subject to an initial heating process that is no longer than sixty minutes in duration;[P]

2. Immediately after initial heating, cooled according to the time and temperature parameters as specified in subsection (6)(d) of this Rule for cooked time/temperature control for safety food;[P]

3. After cooling, held frozen or cold, as specified for time/temperature control for safety food as specified in subsection (6)(f) of this Rule;[P]

4. Prior to sale or service, cooked using a process that heats all parts of the food to a temperature for a time as specified under subsection (5)(a)1-3 of this Rule;[P]

5. Cooled according to the time and temperature parameters specified for cooked time/temperature control for safety food as specified in 2 of this subsection if not either hot held as specified in subsection (6)(f) of this Rule, served immediately, or held using time as a public health control as specified in subsection (6)(i) of this Rule after complete cooking;[P] and

6. Prepared and stored according to written procedures that:

   (i) Have obtained prior approval from the Health Authority;[Pf]

   (ii) Are maintained in the food service establishment and are available to the Health Authority upon request;[Pf]

   (iii) Describe how the requirements specified in paragraphs 1 through 5 of this subsection are to be monitored and documented by the permit holder and the corrective actions to be taken if the requirements are not met;[Pf]

   (iv) Describe how the foods, after initial heating, but prior to complete cooking, are to be marked or otherwise identified as foods that must be cooked as specified in paragraph 4 of this subsection prior to being offered for sale or service;[Pf] and

   (v) Describe how the foods, after initial heating but prior to cooking as specified in paragraph 4 of this subsection, are to be separated from ready-to-eat foods as specified in subsection (4)(c)1 of this Rule.[Pf]

(e) Parasite Destruction.

1. Before service or sale in ready-to-eat form, raw, raw-marinated, partially cooked, or marinated-partially cooked fish shall be:

   (i) Frozen and stored at a temperature of -4°F (-20°C) or below for a minimum of 7 days (168 hours) in a freezer;[P]

(ii) Frozen at -31°F (-35°C) or below until solid and stored at -31°F (-35°C) or below for a minimum of 15 hours;[P] or

(iii) Frozen at -31°F (-35°C) or below until solid and stored at -4°F (-20°C) or below for a minimum of 24 hours.[P]

2. The requirement in paragraph 1 of this subsection does not apply to:

(i) Molluscan shellfish;

(ii) A scallop product consisting only of the shucked adductor muscle;

(iii) Tuna of the species Thunnusalalunga, Thunnusalbacares (Yellowfin tuna), Thunnusatlanticus, Thunnusmaccoyii (Bluefin tuna, Southern), Thunnusobesus (Bigeye tuna), or Thunnusthynnus (Bluefin tuna, Northern); or

(iv) Aquacultured fish, such as salmon, that:

(I) If raised in open water, are raised in net-pens, or

(II) Are raised in land-based operations such as ponds or tanks, and

(III) Are fed formulated feed, such as pellets, that contains no live parasites infective to the aquacultured fish.

(v) Fish eggs that have been removed from the skein and rinsed.

(f) Records, Creation and Retention.

1. Except as specified in subsections (2) and (5)(e) of this Rule. If raw, raw-marinated, partially cooked, or marinated-partially cooked fish are served or sold in ready-to-eat form, the person in charge shall record the freezing temperature and time to which the fish are subjected and shall retain the records of the food service establishment for 90 calendar days beyond the time of service or sale of the fish.[Pf]

2. If the fish are frozen by a supplier, a written agreement or statement from the supplier stipulating that the fish supplied are frozen to a temperature and for a time specified under subsection (5)(e) of this Rule may substitute for the records specified under paragraph 1 of this subsection.

3. If raw, raw-marinated, partially cooked, or marinated-partially cooked fish are served or sold in ready-to-eat form, and the fish are raised and fed as

specified in subsection (5)(e)2(iv) of this Rule, a written agreement or statement from the supplier or aquaculturist stipulating that the fish were raised and fed as specified in subsection (5)(e)2(iv) of this Rule shall be obtained by the person in charge and retained in the records of the food service establishment for 90 calendar days beyond the time of service or sale of the fish.[Pf]

(g) Preparation for Immediate Service. Cooked and refrigerated food that is prepared for immediate service in response to an individual consumer order, such as a roast beef sandwich au jus, may be served at any temperature.

(h) Reheating for Hot Holding.

1. Except as specified under paragraphs 2, 3, and 5 of this subsection, time/temperature control for safety food that is cooked, cooled, and reheated for hot holding shall be reheated so that all parts of the food reach a temperature of at least 165°F (74°C) for 15 seconds.[P]

2. Except as specified under paragraph 3 of this subsection, time/temperature control for safety food reheated in a microwave oven for hot holding shall be reheated so that all parts of the food reach a temperature of at least 165°F (74°C) and the food is rotated or stirred, covered, and then allowed to stand covered for 2 minutes after reheating.[P]

3. Ready-to-eat time/temperature control for safety food that has been commercially processed and packaged in a food processing plant that is inspected by the food regulatory authority that has jurisdiction over the plant, shall be heated to a temperature of at least 135°F (57°C) for hot holding.[P]

4. Reheating for hot holding shall be done rapidly and the time the food is between the temperatures of 41°F (5°C) and 165°F (74°C) and 41°F (5°C) and 135°F (57°C) for commercially processed food, may not exceed 2 hours.[P]

5. Remaining unsliced portions of meat roasts that are cooked as specified under subsection (5)(a)2 of this Rule may be reheated for hot holding using the same oven parameters and minimum time and temperature conditions under which it was cooked.

(i) Treating Juice. Juice packaged in a food service establishment shall be:

1. Treated under a HACCP plan to attain a 5-log reduction, which is equal to a 99.999% reduction, of the most resistant microorganism of public health significance;[P] or

2. Labeled, if not treated to yield a 5-log reduction of the most resistant microorganism of public health significance:[Pf]

   (i) As specified under subsection (7)(c) of this Rule,[Pf] and

   (ii) As specified in 21 CFR 101.17(g) Food labeling, warning, notice, and safe handling statements, juices that have not been specifically processed to prevent, reduce, or eliminate the presence of pathogens with the following, "WARNING: This product has not been pasteurized and, therefore, may contain harmful bacteria that can cause serious illness in children, the elderly, and persons with weakened immune systems."[Pf]

(6) Limiting the Growth of Pathogens

(a) Frozen Food. Stored frozen foods shall be maintained frozen.

(b) Time/Temperature Control for Safety Food, Slacking. Frozen time/temperature control for safety food that is slacked to moderate the temperature shall be held:

1. Under refrigeration that maintains the food temperature at 41°F (5°C) or less; or

2. At any temperature if the food remains frozen.

(c) Thawing. Except as specified in paragraph 4 of this subsection, time/temperature control for safety food shall be thawed:

1. Under refrigeration that maintains the food temperature at 41°F (5°C) or less; or

2. Completely submerged under running water:

   (i) At a water temperature of 70°F (21°C) or below,

   (ii) With sufficient water velocity to agitate and float off loose particles in an overflow, and

   (iii) For a period of time that does not allow thawed portions of ready-to-eat food to rise above 41°F (5°C), or

   (iv) For a period of time that does not allow thawed portions of a raw animal food requiring cooking to be above 41°F (5°C), for more than 4 hours including:

(I) The time the food is exposed to the running water and the time needed for preparation for cooking, or

(II) The time it takes under refrigeration to lower the food temperature to 41°F (5°C);

3. As part of a cooking process if the food that is frozen is:

   (i) Cooked as specified under subsections (5)(a)1 or 2 or (5)(b) of this Rule, or

   (ii) Thawed in a microwave oven and immediately transferred to conventional cooking equipment, with no interruption in the process; or

4. Using any procedure if a portion of frozen ready-to-eat food is thawed and prepared for immediate service in response to an individual consumer's order.

5. Reduced oxygen packaged fish that bears a label indicating that it is to be kept frozen until time of use shall be removed from the reduced oxygen environment:

   (i) Prior to its thawing under refrigeration that maintains the food temperature at 41°F (5°C) or less; or

   (ii) Prior to, or immediately upon completion of its thawing, using procedures to completely submerge in running water as specified in paragraph 2 of this subsection.

(d) Cooling.

1. Cooked time/temperature control for safety food shall be cooled:

   (i) Within 2 hours from 135°F (57°C) to 70°F (21°C);[P] and

   (ii) Within a total of 6 hours from 135°F (57°C) to 41°F (5°C) or less.[P]

2. Time/temperature control for safety food shall be cooled within 4 hours to 41°F (5°C) or less if prepared from ingredients at ambient temperature, such as reconstituted foods and canned tuna.[P]

3. Except as specified under paragraph 4 of this subsection, a time/temperature control for safety food received in compliance with laws allowing a

temperature above 41°F (5°C) during shipment from the supplier shall be cooled within 4 hours to 41°F (5°C).[P]

4. Raw eggs shall be received and immediately placed in refrigerated equipment that maintains an ambient air temperature of 45°F (7°C) or less.[P]

(e) Cooling Methods.

1. Cooling shall be accomplished in accordance with the time and temperature criteria specified under DPH Rule 511-6-1-.04(6)(d) by using one or more of the following methods depending on the type of food being cooled:

   (i) Placing the food in shallow pans;[Pf]

   (ii) Separating the food into smaller or thinner portions;[Pf]

   (iii) Using rapid cooling equipment;[Pf]

   (iv) Stirring the food in a container placed in an ice water bath;[Pf]

   (v) Using containers that facilitate heat transfer;[Pf]

   (vi) Adding ice as an ingredient;[Pf] or

   (vii) Other effective methods.[Pf]

2. When placed in cooling or cold holding equipment, food containers in which food is being cooled shall be:

   (i) Arranged in the equipment to provide maximum heat transfer through the container walls; and

   (ii) Loosely covered, or uncovered if protected from overhead contamination during the cooling period to facilitate heat transfer from the surface of the food.

(f) Time/Temperature Control for Safety Food, Hot and Cold Holding. Except during preparation, cooking, or cooling, or when time is used as the public health control, time/temperature control for safety food shall be maintained at 41°F (5°C) or below or 135°F (57°C) or above, except that roasts cooked to a temperature and for a time specified in subsection (5)(a)2 of this Rule and reheated using the same temperature and time conditions as cooking may be held at a temperature of 130°F (54°C) or above.[P]

(g) Ready-to-Eat Time/Temperature Control for Safety Food, Date Marking.

1. Except when packaging food using a reduced oxygen packaging method, and except as specified in paragraphs 4 and 5 of this subsection, refrigerated, ready-to-eat, time/temperature control for safety food prepared and held in a food establishment for more than 24 hours shall be clearly marked to indicate the date or day by which the food shall be consumed on the premises, sold, or discarded, when held at a temperature of 41°F (5°C) or below for a maximum of 7 days. The day of preparation shall be counted as Day 1.[Pf]

2. Except as specified in paragraphs 4 through 6 of this subsection, refrigerated, ready-to-eat, time/temperature control for safety food prepared and packaged by a food processing plant shall be clearly marked, at the time the original container is opened in a food service establishment and if the food is held for more than 24 hours, to indicate the date or day by which the food shall be consumed on the premises, sold, or discarded, when held at a temperature of 41°F (5°C) or below for a maximum of 7 days after the original container is opened. The day the original container is opened in the food service establishment shall be counted as Day 1, except, the day or date marked by the food service establishment may not exceed a manufacturer's use by date if the manufacturer determined the use-by date based on food safety;[Pf]

3. A refrigerated, ready-to-eat, time/temperature control for safety food ingredient or a portion of a refrigerated, ready-to-eat, time/temperature control for safety food that is subsequently combined with additional ingredients or portions of food shall retain the date marking of the earliest-prepared or first-prepared ingredient.[Pf]

4. A date marking system that meets the criteria stated in paragraphs 1 and 2 of this subsection may include:

   (i) Using a method approved by the Health Authority for refrigerated, ready-to-eat time/temperature control for safety food that is frequently rewrapped, such as lunchmeat or a roast, or for which date marking is impractical, such as soft serve mix or milk in a dispensing machine;

   (ii) Marking the date or day of preparation, with a procedure to discard the food on or before the last date or day by which the food must be consumed on the premises, sold, or discarded;

   (iii) Marking the date or day the original container is opened in a food service establishment, with a procedure to discard the food on or before the last date or day by which the food must be consumed on the premises, sold, or discarded; or

(iv) Using calendar dates, days of the week, color-coded marks, or other effective marking methods, provided that the marking system is disclosed to the Health Authority upon request.

5. The requirements in paragraphs 1 and 2 of this subsection do not apply to individual meal portions served or repackaged for sale from a bulk container upon a consumer's request.

6. The requirements in paragraphs 1 and 2 of this subsection do not apply to shellstock.

7. The requirement in paragraph 2 of this subsection does not apply to the following foods prepared and packaged by a food processing plant inspected by a Health Authority:

   (i) Deli salads, such as ham salad, seafood salad, chicken salad, egg salad, pasta salad, potato salad, and macaroni salad, manufactured in accordance with 21 CFR 110 Current good manufacturing practice in manufacturing, packing, or holding human food;

   (ii) Hard cheeses containing not more than 39% moisture as defined in 21 CFR 133 Cheeses and related cheese products, such as cheddar, gruyere, parmesan and reggiano, and romano;

   (iii) Semi-soft cheeses containing more than 39% moisture, but not more than 50% moisture, as defined in 21 CFR 133 Cheeses and related cheese products, such as blue, edam, gorgonzola, gouda, and monterey jack;

   (iv) Cultured dairy products as defined in 21 CFR 131 Milk and cream, such as yogurt, sour cream, and buttermilk;

   (v) Preserved fish products, such as pickled herring and dried or salted cod, and other acidified fish products defined in 21 CFR 114 Acidified foods;

   (vi) Shelf stable, dry fermented sausages, such as pepperoni and Genoa salami; and

   (vii) Shelf stable salt-cured products, such as prosciutto and Parma ham.

(h) Ready-to-Eat, Time/Temperature Control for Safety Food, Disposition.

1. A food that requires datemarking shall be discarded if it:

(i) Exceeds 7 days, not including the time that the product is frozen;[P]

(ii) Is in a container or package that does not bear a date or day;[P] or

(iii) Is appropriately marked with a date or day that exceeds 7 days.[P]

2. Refrigerated, ready-to-eat, time/temperature control for safety food prepared in a food service establishment and dispensed through a vending machine with an automatic shutoff control shall be discarded if it exceeds 7 days.[P]

(i) Time as a Public Health Control.

1. Except as specified under paragraph 4 of this subsection, if time without temperature control is used as the public health control for a working supply of time/temperature control for safety food before cooking, or for ready-to-eat time/temperature control for safety food that is displayed or held for sale or service, written procedures shall be prepared in advance, maintained in the food service establishment, and made available to the regulatory authority upon request that specify:[Pf]

   (i) Methods of compliance with paragraphs 2(i) - (iii) or 3(i) through (v) of this subsection; and

   (ii) Methods of compliance with the cooling of time/temperature control for safety food that is prepared, cooked, and refrigerated before time is used as a public health control.[Pf]

2. If time without temperature control is used as the public health control up to a maximum of 4 hours:

   (i) The food shall have an initial temperature of 41°F (5°C) or less when removed from cold holding temperature control, or 135°F (57°C) or greater when removed from hot holding temperature control;[P]

   (ii) The food shall be marked or otherwise identified to indicate the time that is 4 hours past the point in time when the food is removed from temperature control;[Pf]

   (iii) The food shall be cooked and served, served at any temperature if ready-to-eat, or discarded, within 4 hours from the point in time when the food is removed from temperature control;[P] and

   (iv) The food in unmarked containers or packages, or marked to exceed a 4-hour limit shall be discarded.[P]

3. If time without temperature control is used as the public health control up to a maximum of 6 hours:

   (i) The food shall have an initial temperature of 41°F (5°C) or less when removed from temperature control and the food temperature may not exceed 70°F (21°C) within a maximum time period of 6 hours;[P]

   (ii) The food shall be monitored to ensure the warmest portion of the food does not exceed 70°F (21°C) during the 6-hour period, unless an ambient air temperature is maintained that ensures the food does not exceed 70°F (21°C) during the 6-hour holding period;[Pf]

   (iii) The food shall be marked or otherwise identified to indicate:[Pf]

      (I) The time when the food is removed from 41°F (5°C) or less cold holding temperature control,[Pf] and

      (II) The time that is 6 hours past the point in time when the food is removed from cold holding temperature control;

   (iv) The food shall be:

      (I) Discarded if the temperature of the food exceeds 70°F (21°C),[P] or

      (II) Cooked and served, served at any temperature if ready-to-eat, or discarded within a maximum of 6 hours from the point in time when the food is removed from 41°F (5°C) or less cold holding temperature control;[P] and

   (v) The food in unmarked containers or packages, or marked with a time that exceeds the 6-hour limit shall be discarded.[P]

4. A food service establishment that serves a highly susceptible population may not use time as the public health control for raw eggs.

(j) Variance Requirement. A food service establishment shall obtain a variance from the Health Authority as specified in DPH Rule 511-6-1-.10(5)(a) and (5)(b) before:[Pf]

1. Smoking food as a method of food preservation rather than as a method of flavor enhancement;[Pf]

2. Curing food;[Pf]

3. Using food additives or adding components such as vinegar:[Pf]

(i) As a method of food preservation rather than as a method of flavor enhancement,[Pf] or

(ii) To render a food so that it is not time/temperature control for safety food;[Pf]

4. Operating a molluscan shellfish life-support system display tank used to store or display shellfish that are offered for human consumption;[Pf]

5. Packaging time/temperature control for safety food using a reduced oxygen packaging method except where the growth and toxin formation of Clostridium botulinum and growth of Listeria monocytogenes are controlled as specified under (k) of this Rule;[Pf]

6. Custom processing animals that are for personal use as food and not for sale or service in a food service establishment;[Pf]

7. Preparing food by another method that is determined by the Health Authority to require a variance;[Pf] or

8. Sprouting seeds or beans.[Pf]

(k) Reduced Oxygen Packaging Without a Variance But HACCP Plan Required, Criteria.

1. Except for a food service establishment that obtains a variance as specified under (j) of this Rule, a food service establishment that packages time/temperature control for safety food using a reduced oxygen packaging method shall control the growth and toxin formation of Clostridium botulinum and the growth of Listeria monocytogenes.[P]

2. Except as specified under paragraph 6 of this subsection, a food service establishment that packages time/temperature control for safety food using a reduced oxygen packaging method shall implement a HACCP plan that contains the information specified under DPH Rule 511-5-14-.02(6)(b) and (d) and that:[Pf]

(i) Identifies the food to be packaged;[Pf]

(ii) Except as specified under paragraphs 3 through 5 of this subsection, requires that the packaged food shall be maintained at 41°F (5°C) or less and meet at least one of the following criteria:[Pf]

(I) Has an aw of 0.91 or less,[Pf]

(II) Has a pH of 4.6 or less,[Pf]

(III) Is a meat or poultry product cured at a food processing plant regulated by the USDA using substances specified in 9 CFR 424.21, Use of food ingredients and sources of radiation, and is received in an intact package,[Pf] or

(IV) Is a food with a high level of competing organisms such as raw meat, raw poultry, or raw vegetables;[Pf]

(iii) Describes how the package shall be prominently and conspicuously labeled on the principal display panel in bold type on a contrasting background, with instructions to:[Pf]

(I) Maintain the food at 41°F (5°C) or below,[Pf] and

(II) Discard the food if within 30 calendar days of its packaging if it is not served for on-premises consumption, or consumed if served or sold for off-premises consumption;[Pf]

(iv) Limits the refrigerated shelf life to no more than 30 calendar days from packaging to consumption, except the time the product is maintained frozen, or the original manufacturer's "sell by" or "use by" date, whichever occurs first;[P]

(v) Includes operational procedures that:

(I) Prohibit contacting ready-to-eat food with bare hands,[Pf]

(II) Identify a designated work area and the method by which:[Pf]

(A) Physical barriers or methods of separation of raw foods and ready-to-eat foods minimize cross contamination,[Pf] and

(B) Access to the processing equipment is limited to responsible trained personnel familiar with the potential hazards of the operation,[Pf] and

(III) Delineate cleaning and sanitization procedures for food-contact surfaces;[Pf] and

(vi) Describes the training program that ensures that the individual responsible for the reduced oxygen packaging operation understands the:[Pf]

(I) Concepts required for a safe operation,[Pf]

(II) Equipment and facilities,[Pf] and

(III) Procedures specified under paragraph 2(v) of this subsection and DPH Rule 511-6-1-.02(8)(b) and (d).[Pf]

3. Except for fish that is frozen before, during, and after packaging. a food service establishment may not package fish using a reduced oxygen packaging method.[P]

4. Except as specified under paragraph 3 of this subsection and subsection (l) of this Rule, a food service establishment that packages food using a cook-chill or sous vide process shall:

(i) Prior to implementation, provide a HACCP plan that contains the information as specified under DPH Rule 511-6-1-.02(8)(b) and (d) to the Health Authority;[Pf]

(ii) Ensure the food is:

(I) Prepared and consumed on the premises, or prepared and consumed off the premises but within the same business entity with no distribution or sale of the bagged product to another business entity or the consumer,[Pf]

(II) Cooked to heat all parts of the food to a temperature and for a time as specified under DPH Rule 511-6-1-.04(5)(a),[P]

(III) Protected from contamination before and after cooking as specified within DPH Rule 511-6-1-.04(4) and (5) of this Rule,[P]

(IV) Placed in a package with an oxygen barrier and sealed before cooking, or placed in a package and sealed immediately after cooking and before reaching a temperature below 135°F (57°C),[P]

(V) Cooled to 41°F (5°C) in the sealed package or bag as specified under DPH Rule 511-6-1-.04(6)(d) of this Rule and subsequently:[P]

I. Cooled to 34°F (1°C) within 48 hours of reaching 41°F (5°C) and held at that temperature until consumed or discarded within 30 days after the date of packaging;[P]

II. Held at 41°F (5°C) or less for no more than 7 days, at which time the food must be consumed or discarded;[P] or

III. Held frozen with no shelf life restriction while frozen until consumed or used.[P]

(VI) Held in a refrigeration unit that is equipped with an electronic system that continuously monitors time and temperature and is visually examined for proper operation twice daily,[Pf]

(VII) If transported off-site to a satellite location of the same business entity, equipped with verifiable electronic monitoring devices to ensure that times and temperatures are monitored during transportation,[Pf] and

(VIII) Labeled with the product name and the date packaged,[Pf] and

(iii) Maintain the records required to confirm that cooling and cold holding refrigeration time/temperature parameters are required as part of the HACCP plan for at least six months and, make such records available to the Health Authority upon request,[Pf]

(iv) Implement written operational procedures as specified under paragraph 2(v) of this subsection and a training program as specified under paragraph 2(vi) of this subsection.[Pf]

5. Except as specified under subsection (l) below, a food service establishment that packages cheese using a reduced oxygen packaging method shall:

(i) Limit the cheeses packaged to those that are commercially manufactured in a food processing plant with no ingredients added in the food service establishment and that meet the Standards of Identity as specified in 21 CFR 133.150 Hard cheeses, 21 CFR 133.169 pasteurized process cheese or 21 CFR 133.187 Semisoft Cheeses;[P]

(ii) Have a HACCP plan that contains the information specified under DPH Rule 511-6-1-.02(6)(b) and (d) and as specified under paragraphs 2(i), (iii)(I), (v), and (vi) of this subsection;[Pf]

(iii) Labels the package on the principal display panel with a "use by" date that does not exceed 30 days from its packaging or the original manufacturer's "sell by" or "use by" date, whichever occurs first;[Pf] and

(v) Discard s the reduced oxygen packaged cheese if it is not sold for off-premises consumption or consumed within 30 calendar days of its packaging.[Pf]

(l) Reduced Oxygen Packaging Without a Variance and no HACCP Plan Required, Criteria.

A HACCP Plan is not required when a food service establishment uses a reduced oxygen packaging method to package time/temperature control for safety food that is always:

1. Labeled with the production time and date,
2. Held at 41°F (5°C) or less during refrigerated storage, and
3. Removed from its package in the food service establishment within 48 hours after packaging.

(7) Food Identity, Presentation, and On-Premises Labeling.

(a) Standards of Identity. Packaged food shall comply with standard of identity requirements in 21 CFR 131-169 and 9 CFR 319 Definitions and standards of identity or composition, and the general requirements in 21 CFR 130 Food Standards: General and 9 CFR 319 Subpart A - General.

(b) Honestly Presented.

1. Food shall be offered for human consumption in a way that does not mislead or misinform the consumer.
2. Food or color additives, colored overwraps, or lights may not be used to misrepresent the true appearance, color, or quality of a food.

(c) Food Labels.

1. Food packaged in a food service establishment, shall be labeled as specified in law, including 21 CFR 101 - Food labeling, and 9 CFR 317 Labeling, marking devices, and containers.

2. Label information shall include:

   (i) The common name of the food, or if there is no common name, an adequately descriptive identity statement;

   (ii) If made from two or more ingredients, a list of ingredients and sub-ingredients in descending order of predominance by weight, including a declaration of artificial color or flavors and chemical preservatives, if contained in the food;

   (iii) An accurate declaration of the net quantity of contents;

   (iv) The name and place of business of the manufacturer, packer, or distributor; and

   (v) The name of the food source for each major food allergen contained in the food unless the food source is already part of the common or usual name of the respective ingredient.[Pf]

   (vi) Except as exempted in the Federal Food, Drug, and Cosmetic Act § 403(Q)(3) - (5), nutrition labeling as specified in 21 CFR 101 - Food Labeling and 9 CFR 317 Subpart B Nutrition Labeling.

   (vii) For any salmonid fish containing canthaxanthin or astaxanthin as a color additive, the labeling of the bulk fish container, including a list of ingredients, displayed on the retail container or by other written means, such as a counter card, that discloses the use of canthaxanthin or astaxanthin.

3. Bulk food that is available for consumer self-dispensing shall be prominently labeled with the following information in plain view of the consumer:

   (i) The manufacturer's or processor's label that was provided with the food; or

   (ii) A card, sign, or other method of notification that includes the information specified under paragraphs 2(i), (ii), and (vi) of this subsection.

4. Bulk, unpackaged foods such as bakery products and unpackaged foods that are portioned to consumer specification need not be labeled if:

   (i) A health, nutrient content, or other claim is not made;

   (ii) There are no state or local laws requiring labeling; and

   (iii) The food is manufactured or prepared on the premises of the food service establishment or at another food service establishment or a food processing plant that is owned by the same person and is regulated by the food regulatory agency that has jurisdiction.

(d) Other Forms of Information.

1. If required by law, consumer warnings shall be provided.

2. Food service establishment or manufacturers' dating information on foods may not be concealed or altered.

(e) Consumption of Animal Foods that are Raw, Undercooked, or Not Otherwise Processed to Eliminate Pathogens.

1. Except as specified in subsections (5)(a)3, and (5)(a)(iv), and (9)(a)3 of this Rule, if an animal food such as beef, eggs, fish, lamb, pork, poultry, or shellfish is served or sold raw, undercooked, or without otherwise being processed to eliminate pathogens, either in ready-to-eat form or as an ingredient in another ready-to-eat food, the permit holder shall inform consumers of the significantly increased risk of consuming such foods by way of a disclosure and reminder, as specified in paragraphs 2 and 3 of this subsection using brochures, deli case or menu advisories, label statements, table tents, placards, or other effective written means. The disclosure and reminder statements shall be worded in legible type in all capital letters and no smaller than font size #8, or if displayed on a menu board shall be printed no smaller than the smallest lettering used for a menu item.[Pf]

2. Disclosure shall include:

   (i) A description of the animal-derived foods, such as "oysters on the half shell (raw oysters)," "raw-egg Caesar salad," and "hamburgers (can be cooked to order);"[Pf] or

   (ii) Identification of the animal-derived foods by asterisking them to a footnote that states that the items are served raw or undercooked, or contain (or may contain) raw or undercooked ingredients.[Pf]

3. The reminder shall include asterisking the animal-derived foods requiring disclosure to a footnote that states:

   (i) Consuming raw or undercooked meats, poultry, seafood, shellfish, or eggs may increase your risk of foodborne illness;[Pf] or

   (ii) Consuming raw or undercooked meats, poultry, seafood, shellfish, or eggs may increase your risk of foodborne illness, especially if you have certain medical conditions.[Pf]

(8) Contaminated Food.

(a) Discarding or Reconditioning Unsafe, Adulterated, or Contaminated Food.

1. A food that is unsafe, adulterated, or not honestly presented shall be discarded or reconditioned according to an approved procedure.[P]

2. Food that is not from an approved source shall be discarded.[P]

3. Ready-to-eat food that may have been contaminated by an employee who has been restricted or excluded shall be discarded.[P]

4. Food that is contaminated by food employees, consumers, or other persons through contact with their hands, bodily discharges, such as nasal or oral discharges, or other means shall be discarded.[P]

(b) Expired Foods. Prepackaged sandwiches, eggs, infant formula, shucked oysters, milk, and time/temperature control safety foods that are labeled as "keep refrigerated" and that are for sale or service to the consumer or used as an ingredient in other foods shall be immediately discarded and shall not be sold, served, or used after the manufacturer's expiration date or the sell-by date.[P]

(9) Special Requirements for Highly Susceptible Populations (Pasteurized Foods, Prohibited Re-Service, and Prohibited Food).

(a) In a food service establishment that serves a highly susceptible population:

1. The following criteria apply to juice:

   (i) For the purposes of this paragraph only, children who are age 9 or less and receive food in a school, day care setting, or similar facility that provides custodial care are included as highly susceptible populations;

   (ii) Prepackaged juice or a prepackaged beverage containing juice, that bears a warning label as specified in 21 CFR, 101.17(g) Food

labeling, warning, notice, and safe handling statements, juices that have not been specifically processed to prevent, reduce, or eliminate the presence of pathogens, or a packaged juice or beverage containing juice, that bears a warning label may not be served or offered for sale;[P] and

(iii) Unpackaged juice that is prepared on the premises for service or sale in a ready-to-eat form shall be processed under a HACCP plan that contains the information specified under DPH Rule 511-6-1-.02(6)(b) through (e) and as specified in 21 CFR Part 120 - Hazard Analysis and Critical Control Point (HACCP) Systems, Subpart B Pathogen Reduction 120.24 Process controls.[P]

2. Pasteurized eggs or egg products shall be substituted for raw eggs in the preparation of:

   (i) Foods such as Caesar salad, hollandaise or Béarnaise sauce, mayonnaise, meringue, eggnog, ice cream, and egg-fortified beverages,[P] and

   (ii) Except as specified in paragraph 6 of this subsection, recipes in which more than one egg is broken and the eggs are combined;[P]

3. The following foods may not be served or offered for sale in a ready-to-eat form:[P]

   (i) Raw animal foods such as raw fish, raw-marinated fish, raw molluscan shellfish, and steak tartare,[P]

   (ii) A partially cooked animal food such as lightly cooked fish, rare meat, soft-cooked eggs that are made from raw eggs, and meringue;[P] and

   (iii) Raw seed sprouts.[P]

4. Except when washing fruits and vegetables, food employees shall handle ready-to-eat food as specified under (4)(a)2. of this Rule.[P]

5. Time only, as the public health control may not be used for raw eggs.[P]

6. The requirement in paragraph 2(ii) of this subsection does not apply if:

   (i) The raw eggs are combined immediately before cooking for one consumer's serving at a single meal, cooked to 145°F (63°C) for 15

seconds, and served immediately, such as an omelet, soufflé, or scrambled eggs;

(ii) The raw eggs are combined as an ingredient immediately before baking and the eggs are thoroughly cooked to a ready-to-eat form, such as a cake, muffin, or bread; or

(iii) The preparation of the food is conducted under a HACCP plan that:

(I) Identifies the food to be prepared,

(II) Prohibits contacting ready-to-eat food with bare hands,

(III) Includes specifications and practices that ensure:

I. Salmonella Enteritidis growth is controlled before and after cooking, and

II. Salmonella Enteritidis is destroyed by cooking the eggs to 155°F (68°C) for 15 seconds or

(IV) Contains the information specified under DPH Rule 511-6-1-.02(8)(d) including procedures that:

I. Control cross contamination of ready-to-eat food with raw eggs, and

II. Set forth cleaning and sanitization procedures for food-contact surfaces, and

(v) Describes the training program that ensures that the food employee responsible for the preparation of the food understands the procedures to be used.

7. Except as specified in paragraph 8 of this subsection, food may be re-served if the food is dispensed so that it is protected from contamination and the container is closed between uses, such as a narrow-neck bottle containing catsup, steak sauce, or wine; or the food, such as crackers, salt, or pepper, is in an unopened original package and is maintained in sound condition.

8. Food may not be re-served under the following conditions:

(i) Any food served to patients or clients who are under contact precautions in medical isolation or quarantine, or protective environment isolation may not be re-served to others outside.

(ii) Packages of food from any patients, clients, or other consumers should not be re-served to persons in protective environment isolation.

Cite as Ga. Comp. R. & Regs. R. 511-6-1-.04
Authority: O.C.G.A. §§ 26-2-373; 31-2A-4.
History. Original Rule entitled "Food" adopted. F. Oct. 9, 2015; eff. Oct. 29, 2015.
Amended: F. Jan. 25, 2023; eff. Feb. 24, 2023, as specified by the Agency.

Rule 511-6-1-.05. Equipment and Utensils.

(1) **Materials.**

(a) **General Requirements.** Utensils and food-contact surfaces of equipment shall be made of materials that do not allow the migration of deleterious substances or impart colors, odors, or tastes to food and under normal use conditions, and shall be: **P** safe **P**, durable, corrosion-resistant, and nonabsorbent. In addition, materials shall be sufficient in weight and thickness to withstand repeated warewashing and shall be finished to have a smooth, easily cleanable surface. Materials shall be resistant to pitting, chipping, crazing, scratching, scoring, distortion and decomposition.

(b) **Iron, Use Limitations.** Cast iron may not be used for utensils or food contact surfaces of equipment except as follows:

1. Cast iron may be used as a surface for cooking.

2. Cast iron may be used in utensils for serving food if the utensils are used only as part of an uninterrupted process from cooking through service.

(c) **Lead, Use Limitation.**

1. Ceramic, china, crystal and decorative utensils such as hand painted ceramic or china that are used in contact with food shall be lead-free or contain levels of lead not to exceed the limits of the following utensil categories: **P**

UTENSIL CATEGORY	Ceramic Article Description	Maximum Lead mg/L
BEVERAGE MUGS, CUPS, PITCHERS	**Coffee Mugs**	**0.5**

LARGE HOLLOWWARE (EXCLUDING PITCHERS)	**Bowls > 1.1 Liter (1.16 Quart)**	**1**
SMALL HOLLOWWARE (EXCLUDING CUPS & MUGS)	**Bowls < 1.1 Liter (1.16 Quart)**	**2.0**
FLAT TABLEWARE	**Plates, Saucers**	**3.0**

2. Pewter alloys containing lead in excess of 0.05% may not be used as a food-contact surface. **P**

3. Solder and flux containing lead in excess of 0.2% may not be used as a food-contact surface.

(d) **Copper, Use Limitations.** Copper and copper alloys such as brass may not be used in contact with a food that has a pH below 6 such as vinegar, fruit juice, or wine or for a fitting or tubing installed between a backflow prevention device and a carbonator **P**, except that copper and copper alloys may be used in contact with beer brewing ingredients that have a pH below 6 in the prefermentation and fermentation steps of a beer brewing operation such as a brewpub or microbrewery.

(e) **Galvanized Metal, Use Limitation.** Galvanized metal may not be used for utensils or food-contact surfaces of equipment that are used in contact with acidic food. **P**

(f) **Sponges, Use Limitation.** Sponges may not be used in contact with cleaned and sanitized or in-use food-contact surfaces.

(g) **Wood, Use Limitation.**

1. Except as specified in paragraphs 2, 3, and 4 of this subsection, wood and wood wicker may not be used as a food-contact surface.

2. Hard maple or an equivalently hard, close-grained wood may be used for cutting boards; cutting blocks; bakers' tables; and utensils such as rolling pins, doughnut dowels, salad bowls, toothpicks, and chopsticks. It may also be used for wooden paddles used in confectionery operations for pressure scraping kettles when manually preparing confections at a temperature of 230ºF (110ºC) or above.

3. Whole, uncut, raw fruits and vegetables, and nuts in the shell may be kept in the wood shipping containers in which they were received, until the fruits, vegetables, or nuts are used.

4. If the nature of the food requires removal of rinds, peels, husks, or shells before consumption, the whole, uncut, raw food may be kept in untreated wood containers or treated wood containers if the containers are treated with a preservative that meets the requirements specified in 21 CFR 178.3800 Preservatives for wood.

(h) **Nonstick Coating, Use Limitation.** Multiuse kitchenware such as frying pans, griddles, sauce pans, cookie sheets, and waffle bakers that have a perfluorocarbon resin (nonstick) coating shall be used with nonscoring or nonscratching utensils and cleaning aids.

(i) **Nonfood-contact Surfaces.** Nonfood-contact surfaces of equipment that are exposed to splash, spillage, or other food soiling or that require frequent cleaning shall be constructed of a corrosion-resistant, nonabsorbent, and smooth material.

(j) **Single-service and Single-use Articles.** Materials that are used to make single-service and single-use articles may not allow the migration of deleterious substances **P** or impart colors, odors, or tastes to food and shall be safe **P**, and clean.

(2) **Design and Construction.**

(a) **Equipment and Utensils.** Equipment and utensils shall be designed and constructed to be durable and to retain their characteristic qualities under normal use conditions.

(b) **Food Temperature Measuring Devices.** Food temperature measuring devices may not have sensors or stems constructed of glass, except that thermometers with glass sensors or stems that are encased in a shatterproof coating such as candy thermometers may be used. **P**

(c) **Multiuse Food-Contact Surfaces.**

1. Multiuse food-contact surfaces shall be:

(i) Smooth; **Pf**

(ii) Free of breaks, open seams, cracks, chips, inclusions, pits, and similar imperfections; **Pf**

(iii) Free of sharp internal angles, corners, and crevices; **Pf**

(iv) Finished to have smooth welds and joints; **Pf** and

(v) Except as specified in paragraph 2 of this subsection, accessible for cleaning and inspection by one of the following methods:

(I) Without being disassembled, [Pf]

(II) By disassembling without the use of tools, [Pf] or

(III) By easy disassembling with the use of handheld tools commonly available to maintenance and cleaning personnel such as screwdrivers, pliers, open-end wrenches, and Allen wrenches. [Pf]

2. The requirement in paragraph 1(v) of this subsection does not apply to cooking oil storage tanks,

   Distribution lines for cooking oils, or beverage syrup lines or tubes.

(d) **Clean-in Place (CIP) Equipment.**

1. Clean-in place (CIP) equipment shall meet the characteristics specified under subsection (2)(c)

   of this Rule and shall be designed and constructed so that:

   (i) Cleaning and sanitizing solutions circulate throughout a fixed system and contact all interior food-contact surfaces, [Pf] and

   (ii) The system is self-draining or capable of being completely drained of cleaning and sanitizing solutions; and

2. CIP equipment that is not designed to be disassembled for cleaning shall be designed with inspection access points to ensure that all interior food-contact surfaces throughout the fixed system

   are being effectively cleaned.

(e) **"V" Threads.** Except for hot oil cooking or filtering equipment,"V" type threads may not be used on food-contact surfaces.

(f) **Hot Oil Filtering Equipment.** Hot oil filtering equipment shall meet the characteristics specified under subsections (2)(c) or (d) of this Rule and shall be readily accessible for filter replacement and cleaning of the filter.

(g) **Can Openers.** Cutting or piercing parts of can openers shall be readily removable for cleaning and for replacement.

(h) **Nonfood-contact Surfaces.** Nonfood-contact surfaces shall be free of unnecessary ledges, projections, and crevices, and designed and constructed to allow easy cleaning and to facilitate maintenance.

(i) **Kick Plates.** Kick plates shall be designed so that the areas behind them are accessible for inspection and cleaning by being:

1. Removable by one of the methods specified under subsection (2)(c)1(v) of this Rule or capable of being rotated open; and

2. Removable or capable of being rotated open without unlocking equipment doors.

(j) **Ventilation Hood Systems, Filters.** Filters or other grease extracting equipment shall be designed to be readily removable for cleaning and replacement if not designed to be cleaned in place.

(k) **Temperature Measuring Devices, Food.**

1. Food temperature measuring devices that are scaled only in Celsius or dually scaled in Celsius and Fahrenheit shall be accurate to ±1ºC in the intended range of use. **Pf**

2. Food temperature measuring devices that are scaled only in Fahrenheit shall be accurate to ±2ºF in the intended range of use. **Pf**

(l) **Temperature Measuring Devices, Ambient Air and Water.**

1. Ambient air and water temperature measuring devices that are scaled in Celsius or dually scaled in Celsius and Fahrenheit shall be designed to be easily readable and accurate to ±1.5ºC in the intended range of use. **Pf**

2. Ambient air and water temperature measuring devices that are scaled only in Fahrenheit shall be accurate to ±3ºF in the intended range of use. **Pf**

(m) **Pressure Measuring Devices.** Pressure measuring devices that display the pressures in the water supply line for the fresh hot water sanitizing rinse shall have increments of 1 pound per square inch (7 kilopascals) or smaller and shall be accurate to ± 2 pounds per square inch (± 14 kilopascals) in the 15-25 pounds per square inch (100-170 kilopascals) range.

(n) **Exhaust Ventilation Hood Systems.** Exhaust ventilation hood systems in food preparation and warewashing areas, including components such as hoods, fans, guards, and ducting shall be designed to prevent grease or condensation from draining or dripping onto food, equipment, utensils, linens, and single-service and single-use articles.

(o) **Equipment Openings, Closures and Deflectors.**

1. A cover or lid for equipment shall overlap the opening and be sloped to drain.

2. An opening located within the top of a unit of equipment that is designed for use with a cover or lid shall be flanged upward at least two-tenths of an inch (5 millimeters).

3. Except as specified under paragraph 4 of this subsection, fixed piping, temperature measuring devices, rotary shafts, and other parts extending into equipment shall be provided with a water tight joint at the point where the item enters the equipment.

4. If a watertight joint is not provided:

   (i) The piping, temperature measuring devices, rotary shafts, and other parts extending through the openings shall be equipped with an apron designed to deflect condensation, drips, and dust from openings into the food; and

   (ii) The opening shall be flanged upward at least two-tenths of an inch (5 millimeters).

(p) **Dispensing Equipment, Protection of Equipment and Food.** In equipment that dispenses or vends liquid food or ice in unpackaged form:

1. The delivery tube, chute, orifice, and splash surfaces directly above the container receiving the food shall be designed in a manner, such as with barriers, baffles, or drip aprons, so that drips from condensation and splash are diverted from the opening of the container receiving the food;

2. The delivery tube, chute, and orifice shall be protected from manual contact such as by being recessed;

3. The delivery tube or chute and orifice of equipment used to vend liquid food or ice in unpackaged form to self-service consumers shall be designed so that the delivery tube or chute and orifice are protected from dust, insects, rodents, and other contamination by a self-closing door if the equipment is:

   (i) Located in an outside area that does not otherwise afford the protection of an enclosure against the rain, windblown debris, insects, rodents, and other contaminants that are present in the environment; or

(ii) Available for self-service during hours when it is not under the full-time supervision of a food employee; and

4. The dispensing equipment actuating lever or mechanism and filling device of consumer self-service beverage dispensing equipment shall be designed to prevent contact with the lip-contact surface of glasses or cups that are refilled.

(q) **Vending Machine, Vending Stage Closure.** The dispensing compartment of a vending machine including a machine that is designed to vend prepackaged snack food that is not time/temperature control for safety food, such as chips, party mixes, and pretzels, shall be equipped with a self-closing door or cover if the machine is:

1. Located in an outside area that does not otherwise afford the protection of an enclosure against the rain, windblown debris, insects, rodents, and other contaminants that are present in the environment; or

2. Available for self-service during hours when it is not under the full-time supervision of a food employee.

(r) **Bearings and Gear Boxes, Leakproof.** Equipment containing bearings and gears that require lubricants shall be designed and constructed so that the lubricant cannot leak, drip, or be forced into food or onto food-contact surfaces.

(s) **Beverage Tubing, Separation.** Beverage tubing and cold-plate beverage cooling devices may not be installed in contact with stored ice. This does not apply to cold plates that are constructed integrally with an ice storage bin.

(t) **Ice Units, Separation of Drains.** Liquid waste drain lines may not pass through an ice machine or ice storage bin.

(u) **Condenser Unit, Separation.** If a condenser unit is an integral component of equipment, the condenser unit shall be separated from the food and food storage space by a dustproof barrier.

(v) **Molluscan Shellfish Life-Support System.**

1. Except as specified under paragraph 2 of this subsection, molluscan shellfish life support system display tanks may not be used to display shellfish that are offered for human consumption and shall be conspicuously marked so that it is obvious to the consumer that the shellfish are for display only. **P**

2. Molluscan shellfish life-support system display tanks that are used to store or display shellfish that are offered for human consumption shall be operated and maintained in accordance with a variance granted by the Health Authority as specified in DPH Rule 511-6-1-.10(5)(a) and a HACCP plan that: **Pf**

   (i) Is submitted by the permit holder and deemed by the Health Authority as being in satisfactory conformance with the specifications found in DPH Rule 511-6-1-.02(6); **Pf** and

   (ii) Ensures that:

      (I) Water used with fish other than molluscan shellfish does not flow into the molluscan tank, **Pf**

      (II) The safety and quality of the shellfish as they were received are not compromised by the use of the tank, **Pf** and

      (III) The identity of the source of the shellstock is retained as specified under DPH Rule 511-6-1-.04(3)(l). **Pf**

(w) **Vending Machines, Automatic Shutoff.**

1. A machine vending time/temperature control for safety food shall have an automatic control that prevents the machine from vending food:

   (i) If there is a power failure, mechanical failure, or other condition that results in an internal machine temperature that cannot maintain food temperatures as specified under DPH Rule 511-6-1-.04(6)(f); **P** and

   (ii) If a condition specified under paragraph 1(i) of this subsection occurs, until the machine is serviced and restocked with food that has been maintained at temperatures specified under DPH Rule 511-6-1-.04(6)(f). **P**

2. When the automatic shutoff within a machine vending time/temperature control for safety food is activated:

   (i) In a refrigerated vending machine, the ambient temperature may not exceed 41°F (5°C) for more than 30 minutes immediately after the machine is filled, serviced, or restocked; **P** or

   (ii) In a hot holding vending machine, the ambient temperature may not be less than 135°F (57°C) for more than 120 minutes immediately after the machine is filled, serviced, or restocked. **P**

(x) **Temperature Measuring Devices**.

1. In a mechanically refrigerated or hot food storage unit, the sensor of a temperature measuring device shall be located to measure the air temperature in the warmest part of a mechanically refrigerated unit and in the coolest part of a hot food storage unit.

2. Except as specified in paragraph 3 of this subsection, cold or hot holding equipment used for time/temperature control for safety food shall be designed to include and shall be equipped with at least one integral or permanently affixed temperature measuring device that is located to allow easy viewing of the device's temperature display.

3. The requirement in paragraph 2 of this subsection does not apply to equipment for which the placement of a temperature measuring device is not a practical means for measuring the ambient air surrounding the food because of the design, type, and use of the equipment such as insulated food transport containers and salad bars.

4. Temperature measuring devices shall be designed to be easily readable.

5. Food temperature measuring devices and water temperature measuring devices on warewashing machines shall have a numerical scale, printed record, or digital readout in increments no greater than 1ºC or 2ºF in the intended range of use. **Pf**

(y) **Warewashing Machine, Data Plate Operating Specifications.** A warewashing machine, if utilized, shall be provided with an easily accessible and readable data plate affixed to the machine by the manufacturer that indicates the machine's design and operating specifications including the:

1. Temperatures required for washing, rinsing, and sanitizing;

2. Pressure required for the fresh water sanitizing rinse unless the machine is designed to use only a pumped sanitizing rinse; and

3. Conveyor speed for conveyor machines or cycle time for stationary rack machines.

(z) **Warewashing Machines, Internal Baffles.** Warewashing machine wash and rinse tanks shall be equipped with baffles, curtains, or other means to minimize internal cross contamination of the solutions in wash and rinse tanks.

(aa) **Warewashing Machines, Temperature Measuring Devices.** A warewashing machine shall be equipped with a temperature measuring device that indicates the temperature of the water:

1. In each wash and rinse tank; **Pf** and

2. As the water enters the hot water sanitizing final rinse manifold or in the chemical sanitizing solution tank. **Pf**

(bb) **Manual Warewashing Equipment, Heaters and Baskets.** If hot water is used for sanitization in manual warewashing operations, the sanitizing compartment of the sink shall be:

1. Designed with an integral heating device that is capable of maintaining water at a temperature not less than 171ºF (77ºC); **Pf** and

2. Provided with a rack or basket to allow complete immersion of equipment and utensils into the hot water. **Pf**

(cc) **Warewashing Machines, Automatic Dispensing of Detergents and Sanitizers.** A warewashing machine that is installed after September 12, 2007 shall be designed and equipped to: automatically dispense detergents and sanitizers **Pf** and incorporate a visual means to verify that detergents and sanitizers are delivered or a visual or audible alarm to signal if the detergents and sanitizers are not delivered to the respective washing and sanitizing cycles. **Pf**

(dd) **Warewashing Machines, Flow Pressure Device.**

1. Warewashing machines that provide a fresh hot water sanitizing rinse shall be equipped with a pressure gauge or similar device such as a transducer that measures and displays the water pressure in the supply line immediately before entering the warewashing machine; and

2. If the flow pressure measuring device is upstream of the fresh hot water sanitizing rinse control valve, the device shall be mounted in a 6.4 millimeter or one-fourth inch Iron Pipe Size (IPS) valve.

3. The requirements in paragraphs 1 and 2 of this subsection do not apply to a machine that uses only a pumped or recirculated sanitizing rinse.

(ee) **Warewashing Sinks and Drainboards, Self-Draining.** Sinks and drainboards of warewashing sinks and machines shall be self-draining.

(ff) **Equipment Compartments, Drainage.** Equipment compartments that are subject to accumulation of moisture due to conditions such as condensation, food or beverage drip, or water from melting ice shall be sloped to an outlet that allows complete draining.

(gg) **Vending Machines, Liquid Waste Products.**

1. Vending machines designed to store beverages that are packaged in containers made from paper products shall be equipped with diversion devices and retention pans or drains for container leakage.

2. Vending machines that dispense liquid food in bulk shall be:

   (i) Provided with an internally mounted waste receptacle for the collection of drip, spillage, other overflow, or internal wastes; and

   (ii) Equipped with an automatic shutoff device that will place the machine out of operation before the waste receptacle overflows.

3. Shutoff devices specified under paragraph 2(ii) of this subsection shall prevent water or liquid food from continuously running if there is a failure of a flow control device in the water or liquid food system or waste accumulation that could lead to overflow of the waste receptacle.

(hh) **Case Lot Handling Equipment, Moveability.** Apparatuses, such as dollies, pallets, racks, and skids used to store and transport large quantities of packaged foods received from a supplier in a cased or overwrapped lot, shall be designed to be moved by hand or by conveniently available apparatuses such as hand trucks and forklifts.

(ii) **Vending Machine Doors and Openings**.

1. Vending machine doors and access opening covers to food and container storage spaces shall be tight-fitting so that the space along the entire interface between the doors or covers and the cabinet of the machine, if the doors or covers are in a closed position, is no greater than 1.5 millimeters or one-sixteenth inch by:

   (i) Being covered with louvers, screens, or materials that provide an equivalent opening of not greater than 1.5 millimeters or one-sixteenth inch. Screening of 12 mesh to 1 inch (12 or more mesh to 2.5 centimeters) meets this requirement;

   (ii) Being effectively gasketed;

   (iii) Having interface surfaces that are at least 13 millimeters or one-half inch wide; or

   (iv) Jambs or surfaces used to form an L-shaped entry path to the interface.

2. Vending machine service connection openings through an exterior wall of a machine shall be closed by sealants, clamps, or grommets so that the openings are no larger than 1.5 millimeters or one-sixteenth inch.

(jj) **Food Service Equipment, Acceptability.** Food service equipment must be commercial grade equipment and designed and built according to standards set by American National standards Institute (ANSI) accredited certification programs. Such an accredited program includes, but is not limited to, one offered by the National Sanitation Foundation, or Underwriters Laboratories. Food equipment that is certified or classified for sanitation by an American National Standards Institute (ANSI) accredited certification program is deemed to comply with subsections (1) and (2) of this Rule when used for its intended purpose.

(3) **Numbers and Capacities.**

(a) **Cooling, Heating, and Holding Capacities.** Equipment for cooling and heating food, and holding cold and hot food, shall be sufficient in number and capacity to provide food temperatures as specified under DPH Rule 511-6-1-.04. **Pf**

(b) **Manual Warewashing, Sink Compartment Requirements.**

1. A sink with at least three compartments shall be provided for manually washing, rinsing, and sanitizing equipment and utensils. **Pf**

2. Sink compartments shall be large enough to accommodate immersion of the largest equipment and utensils. Equipment and utensils that are too large for the warewashing sink, shall be washed, rinsed, and sanitized manually or cleaned through pressure spray methods. **Pf**

3. Alternative manual warewashing equipment may be used when there are special cleaning needs or constraints and its use is approved. Alternative manual warewashing equipment may include:

(i) High-pressure detergent sprayers;

(ii) Low- or line-pressure spray detergent foamers;

(iii) Other task-specific cleaning equipment;

(iv) Brushes or other implements; or

(v) Receptacles that substitute for the compartments of a multicompartment sink.

(c) **Drainboards.** Drainboards, utensil racks, or tables large enough to separately accommodate all soiled and cleaned items that may accumulate during hours of

operation shall be provided for necessary utensil holding before cleaning and after sanitizing.

(d) **Ventilation Hood Systems, Adequacy.** Ventilation hood systems and devices shall be sufficient in number and capacity to prevent grease or condensation from collecting on walls and ceilings.

(e) **Clothes Washers and Dryers.**

1. If work clothes or linens are laundered on the premises, then a mechanical clothes washer and dryer shall be provided and used.

2 . If on-premises laundering is limited to wiping cloths intended to be used moist, or wiping cloths are air-dried, then a mechanical clothes washer and dryer need not be provided.

(f) **Utensils, Consumer Self-Service.** A food dispensing utensil shall be available for each container displayed at a consumer self-service unit such as a buffet or salad bar. The utensil's length shall be longer than the widest portion of the container. **Pf**

(g) **Food Temperature Measuring Devices.**

1. Food temperature measuring devices shall be provided and readily accessible for use in ensuring attainment and maintenance of food temperatures as specified under DPH Rule 511-6-1-.04. **Pf**

2. A temperature measuring device with a suitable small-diameter probe that is designed to measure the temperature of thin masses shall be provided and readily accessible to accurately measure the temperature in thin foods such as meat patties and fish filets. **Pf**

(h) **Temperature Measuring Devices, Manual and Mechanical Warewashing.**

1. In manual warewashing operations, a temperature measuring device shall be provided and readily accessible for frequently measuring the washing and sanitizing temperatures. **Pf**

2. In hot water mechanical warewashing operations, an irreversible registering temperature indicator shall be provided and readily accessible for measuring the utensil surface temperature. **Pf**

(i) **Sanitizing Solutions, Testing Devices.** A test kit or other device that accurately measures the concentration in mg/L of sanitizing solutions shall be provided. **Pf**

(j) **Sink for Washing Raw Fruits and Vegetables.** At least one sink, plumbed with hot and cold water under pressure, shall be provided for the washing of fruits and vegetables as specified under DPH Rule 511-6-1-.04(4)(g)1. **P**

(4) **Location and Installation.**

(a) **Equipment, Clothes Washers and Dryers, and Storage Cabinets, Contamination Prevention.**

1. Except as specified in paragraph 2 of this subsection, equipment, a cabinet used for the storage of food, or a cabinet that is used to store cleaned and sanitized equipment, utensils, laundered linens, and single-service and single-use articles may not be located under any source of contamination, including in locker rooms; in toilet rooms; in garbage rooms; in mechanical rooms; under sewer lines; under leaking water lines including leaking automatic fire sprinkler heads or under lines on which water has condensed; or under open stairwells.

2. A storage cabinet used for linens or single-service or single-use articles may be stored in a locker room.

3. If a mechanical clothes washer or dryer is provided, it shall be located so that the washer or dryer is protected from contamination and only where there is no exposed food; clean equipment, utensils, and linens; and unwrapped single-service and single-use articles.

(b) **Fixed Equipment, Spacing or Sealing.**

1. Equipment that is fixed because it is not easily movable shall be installed so that it is:

   (i) Spaced to allow access for cleaning along the sides, behind, and above the equipment;

   (ii) Spaced from adjoining equipment, walls, and ceilings a distance of not more than one thirty-second inch or 1 millimeter; or

   (iii) Sealed to adjoining equipment or walls, if the equipment is exposed to spillage or seepage.

2. Table-mounted equipment that is not easily movable shall be installed to allow cleaning of the equipment and areas underneath and around the equipment by being:

   (i) Sealed to the table; or

(ii) Elevated on legs that provide at least a 4 inch (10 centimeter) clearance between the table and the equipment.

(c) **Fixed Equipment, Elevation or Sealing.**

1. Except as specified in paragraph 2 of this subsection, floor-mounted equipment that is not easily movable shall be sealed to the floor or elevated on legs that provide at least a 6 inch (15 centimeter) clearance between the floor and the equipment.

2. If no part of the floor under the floor-mounted equipment is more than 6 inches (15 centimeters) from the point of cleaning access, the clearance space may be only 4 inches (10 centimeters).

3. Except as specified in paragraph 4 of this subsection, table-mounted equipment that is not easily movable shall be elevated on legs that provide at least a 4 inch (10 centimeter) clearance between the table and the equipment.

4. The clearance space between the table and table-mounted equipment may be:

   (i) 3 inches (7.5 centimeters) if the horizontal distance of the table top under the equipment is no more than 20 inches (50 centimeters) from the point of access for cleaning; or

   (ii) 2 inches (5 centimeters) if the horizontal distance of the table top under the equipment is no more than 3 inches (7.5 centimeters) from the point of access for cleaning.

(5) **Acceptability of Existing Equipment.** Equipment that was installed in a food service establishment prior to September 12, 2007 and that does not fully meet all of the material, design and fabrication requirements specified under subsections (1)(a) through (j) and subsections (2)(a) through (jj) of this Rule shall be deemed acceptable in that establishment if it is in good repair, capable of being maintained in a sanitary condition and the food-contact surfaces are nontoxic. Replacement equipment and new equipment acquired after the effective date of this Chapter shall meet the requirements of this Rule. **Pf**

(6) **Maintenance and Operation.**

(a) **Good Repair and Proper Adjustment.**

1. Equipment shall be maintained in a state of repair and condition that meets the requirements specified under subsections (1) and (2)of this Rule.

2. Equipment components such as doors, seals, hinges, fasteners, and kick plates shall be kept intact, tight, and adjusted in accordance with manufacturer's specifications.

3. Cutting or piercing parts of can openers shall be kept sharp to minimize the creation of metal fragments that can contaminate food when the container is opened.

(b) **Cutting Surfaces.** Surfaces such as cutting blocks and boards that are subject to scratching and scoring shall be resurfaced if they can no longer be effectively cleaned and sanitized, or discarded if they cannot be resurfaced.

(c) **Microwave Ovens.** Microwave ovens shall be in good repair and meet the safety standards specified in 21 CFR 1030.10 for Microwave ovens.

(d) **Warewashing Equipment, Cleaning Frequency**. A warewashing machine; the compartments of sinks, basins, or other receptacles used for washing and rinsing equipment, utensils, or raw foods, or laundering wiping cloths; and drainboards or other equipment used to substitute for drainboards shall be cleaned before use; throughout the day at a frequency necessary to prevent recontamination of equipment and utensils and to ensure that the equipment performs its intended function; and if used, at least every 24 hours.

(e) **Warewashing Machines, Manufacturers' Operating Instructions.**

1. A warewashing machine and its auxiliary components shall be operated in accordance with the machine's data plate and other manufacturer's instructions.

2. A warewashing machine's conveyor speed or automatic cycle times shall be maintained accurately and timed in accordance with the manufacturer's specifications.

(f) **Warewashing Sinks, Use Limitation.**

1. A warewashing sink may not be used for handwashing. **Pf**

2. A warewashing sink may be used for thawing and preparing raw foods and raw foods served in the ready-to-eat form, other than fruits and vegetables, if the sink is cleaned and sanitized prior to use and the food is placed in a clean colander or pan. **Pf**

(g) **Warewashing Equipment, Cleaning Agents.** When used for warewashing, the wash compartment of a sink or mechanical warewasher shall contain a wash solution of soap, detergent, acid cleaner, alkaline cleaner, degreaser, abrasive cleaner, or other cleaning agent according to the cleaning agent manufacturer's label instructions. **Pf**

(h) **Warewashing Equipment, Clean Solutions.** The wash, rinse, and sanitize solutions shall be kept clean.

(i) **Manual Warewashing Equipment, Wash Solution Temperature.** The temperature of the wash solution in manual warewashing equipment shall be maintained at not less than 110°F (43°C) or the temperature specified on the cleaning agent manufacturer's label instructions. **Pf**

(j) **Mechanical Warewashing Equipment, Wash Solution Temperature.**

1. The temperature of the wash solution in spray type warewashers that use hot water to sanitize may not be less than:

   (i) For a stationary rack, single temperature machine, 165ºF (74ºC); **Pf**

   (ii) For a stationary rack, dual temperature machine, 150ºF (66ºC); **Pf**

   (iii) For a single tank, conveyor, dual temperature machine, 160ºF (71ºC); **Pf** or

   (iv) For a multitank, conveyor, multitemperature machine, 150ºF (66ºC). **Pf**

2. The temperature of the wash solution in spray-type warewashers that use chemicals to sanitize may not be less than 120ºF (49ºC). **Pf**

(k) **Manual Warewashing Equipment, Hot Water Sanitization Temperatures.** If immersion in hot water is used for sanitizing in a manual operation, the temperature of the water shall be maintained at 171ºF (77ºC) or above. **P**

(l) **Mechanical Warewashing Equipment, Hot Water Sanitization Temperatures.**

1. Except as specified in paragraph 2 of this subsection, in a mechanical operation, the temperature of the fresh hot water sanitizing rinse as it enters the manifold may not be more than 194ºF (90ºC), or less than: **Pf**

   (i) For a stationary rack, single temperature machine, 165ºF (74ºC); **Pf** or

   (ii) For all other machines, 180ºF (82ºC). **Pf**

2. The maximum temperatures specified under paragraph 1 of this subsection, do not apply to the high pressure and temperature systems with wand-type, hand-held, spraying devices used for the in-place cleaning and sanitizing of equipment such as meat saws.

(m) **Mechanical Warewashing Equipment, Sanitization Pressure.** The flow pressure of the fresh hot water sanitizing rinse in a warewashing machine, as measured in the water line immediately downstream or upstream from the fresh hot water sanitizing control valve, shall be within the range specified on the machine manufacturer's data plate and may not be less than 35 kilopascals (5 pounds per square inch) or more than 200 kilopascals (30 pounds per square inch).

(n) **Manual and Mechanical Warewashing Equipment, Chemical Sanitization - Temperature, pH, Concentration, and Hardness.** A chemical sanitizer used in a sanitizing solution for a manual or mechanical operation at contact times specified under subsection (8)(b)3 of this Rule shall meet the requirements specified in DPH Rule 511-6-1-.07(6)(g), shall be used in accordance with the Environmental Protection Agency (EPA)-registered label use instructions **P**, and shall be used as follows:

1. A chlorine solution shall have a minimum temperature based on the concentration and pH of the solution as listed in the following chart; **P**

Concentration Range	Minimum Temperature	
MG/L	PH 10 or less ºF (ºC)	PH 8 or less ºF (ºC)
25-49	120 (49)	120 (49)
50-99	100 (38)	75 (24)
100	55 (13)	55 (13)

2. An iodine solution shall have a minimum temperature of 68°F (20°C **P** minimum concentration between 12.5 ppm and 25 ppm, **P** and pH of 5.0 or less or a pH no higher than the level for which the manufacturer specifies for the solution to be effective; **P**

3. A quaternary ammonium compound solution shall have a minimum temperature of 75ºF (24ºC), **P** have a concentration as specified in DPH Rule 511-6-1-.07(6)(g) and as indicated by the manufacturer's use directions included in the labeling, **P** and be used only in water with 500 ppm hardness

or less or in water having a hardness no greater than specified by the EPA-registered label use instructions; **P**

4. If another solution of a chemical specified under paragraphs 1 through 3 of this subsection is used, the permit holder shall demonstrate to the Health Authority that the solution achieves sanitization and the use of the solution shall be approved; **P**

5. If a chemical sanitizer other than chlorine, iodine, or a quaternary ammonium compound is used, it shall be applied in accordance with the EPA-registered label use instructions; **P** and

6. If a chemical sanitizer is generated by a device located on-site at the food service establishment, it shall be used as specified in 1-5 of this subsection and shall be produced by a device that:

   (i) complies with law as specified in sections 2(q)(1) and 12 of the Federal Insecticide, Fungicide, and Rodenticide Act (FIFRA), **P**

   (ii) complies with 40 CFR 152.500 Requirement for Devices and 40 CFR 156.10 Labeling Requirements, **P**

   (iii) displays the EPA device manufacturing facility registration number on the device, **Pf** and

   (iv) is operated and maintained in accordance with manufacturer's instructions. **Pf.**

7. On-site chemical sanitizer generating equipment with active ingredients, such as copper, must be registered as pesticides. The active ingredient may be part of the equipment or separately added.

(o) **Manual Warewashing Equipment, Chemical Sanitization Using Detergent-Sanitizers.** If a detergent-sanitizer is used to sanitize in a cleaning and sanitizing procedure where there is no distinct water rinse between the washing and sanitizing steps, the agent applied in the sanitizing step shall be the same detergent-sanitizer that is used in the washing step.

(p) **Warewashing Equipment, Determining Chemical Sanitizer Concentration.** Concentration of the sanitizing solution shall be accurately determined by using a test kit or other device. **Pf.**

(q) **Good Repair and Calibration.**

1. Utensils shall be maintained in a state of repair or condition that complies with the requirements specified under subsections (1) and (2) of this Rule or shall be discarded.

2. Food temperature measuring devices shall be calibrated in accordance with manufacturer's specifications as necessary to ensure their accuracy. **Pf.**

3. Ambient air temperature, water pressure, and water temperature measuring devices shall be maintained in good repair and be accurate within the intended range of use.

(r) **Single-Service and Single-Use Articles, Use Limitation.**

1. Single-service and single-use articles may not be reused.

2. The bulk milk container dispensing tube shall be cut on the diagonal leaving no more than one inch protruding from the chilled dispensing head.

(s) **Shells, Use Limitation.** Mollusk and crustacean shells shall not be used more than once as serving containers.

(7) **Cleaning of Equipment and Utensils.**

(a) **Equipment, Food-Contact Surfaces, Nonfood-Contact Surfaces, and Utensils**.

1. Equipment food-contact surfaces and utensils shall be clean to sight and touch. **Pf.**

2. The food-contact surfaces of cooking equipment and pans shall be kept free of encrusted grease deposits and other soil accumulations.

3. Nonfood-contact surfaces of equipment shall be kept free of an accumulation of dust, dirt, food residue, and other debris.

(b) **Equipment Food-Contact Surfaces and Utensils.**

1. Equipment food-contact surfaces and utensils shall be cleaned:

(i) Before each use with a different type of raw animal food such as beef, fish, lamb, pork, or poultry. It does not apply if the food-contact surface or utensil is in contact with a succession of different types of raw meat and raw poultry each requiring a higher cooking temperature as specified under DPH Rule 511-6-1.04(5)(a) than the previous type such as preparing raw pork followed by cutting raw poultry on the same cutting board; **P**

(ii) Each time there is a change from working with raw foods to working with ready-to-eat foods; **P**

(iii) Between uses with raw fruits and vegetables and with Time/Temperature Control for safety food; **P**

(iv) Before using or storing a food temperature measuring device; **P** and

(v) At any time during the operation when contamination may have occurred. **P**

2. Except as specified in paragraph 3 of this subsection, if used with time/temperature control for safety food, equipment food-contact surfaces and utensils shall be cleaned at least every 4 hours throughout the day. **P**

3. Surfaces of utensils and equipment contacting time/temperature control for safety food may be cleaned less frequently than every 4 hours if:

(i) In storage, containers of time/temperature control for safety food and their contents are maintained at temperatures specified under DPH Rule 511-6-1-.04 and the containers are cleaned when they areempty;

(ii) Utensils and equipment are used to prepare food in a refrigerated room or area that is maintained at one of the temperatures in the following chart and:

(I) The utensils and equipment are cleaned at the frequency in the following chart that corresponds to the temperature:

Temperature	Cleaning Frequency
41ºF (5.0ºC) or less	24 hours
>41ºF - 45ºF (>5.0ºC - 7.2ºC)	20 hours
>45ºF - 50ºF (>7.2ºC - 10.0ºC)	16 hours
>50ºF - 55ºF (>10.0ºC - 12.8ºC)	10 hours

and

(II) The cleaning frequency based on the ambient temperature of the refrigerated room or area is documented in the food service establishment.

(iii) Temperature measuring devices are maintained in contact with food, such as when left in a container of deli food or in a roast, held at temperatures specified under DPH Rule 511-6-1-.04;

(iv) Equipment is used for storage of packaged or unpackaged food, such as a reach-in refrigerator, and the equipment is cleaned at a frequency necessary to preclude accumulation of soil residues;

(v) The cleaning schedule is approved based on consideration of:

(I) Characteristics of the equipment and its use,

(II) The type of food involved,

(III) The amount of food residue accumulation, and

(IV) The temperature at which the food is maintained during the operation and the potential for the rapid and progressive multiplication of pathogenic or toxigenic microorganisms that are capable of causing foodborne disease; or

(vi) In-use utensils are intermittently stored in a container of water in which the water is maintained at 135ºF (57ºC) or more and the utensils and container are cleaned at least every 24 hours or at a frequency necessary to preclude accumulation of soil residues.

4. Dining counters and table-tops shall be cleaned and sanitized routinely after removing all soiled tableware and food trays shall be cleaned and sanitized after each use by one of the following methods:

(i) A two step method in which one cloth, rinsed in sanitizing solution is used to clean food debris from the surface and a second cloth in separate sanitizing solution is used to rinse;

(ii) Sanitizing solution is sprayed onto the surface and the surface is then wiped clean with a disposable towel;

(iii) If used for cleaning and sanitizing, single-use disposable sanitizer wipes shall be used in accordance with EPA-registered label use instructions; or

(iv) Other methods approved by the Health Authority.

(v) Food trays may be cleaned and sanitized the same as table ware.

5. Except when dry cleaning methods are used as specified under subsection (7)(e) of this Rule. surfaces of utensils and equipment contacting food that is not time/temperature control for safety food shall be cleaned:

   (i) At any time when contamination may have occurred;

   (ii) At least every 24 hours for iced tea dispensers including nozzles and consumer self-service utensils such as tongs, scoops, or ladles;

   (iii) Before restocking consumer self-service equipment and utensils such as condiment dispensers and display containers; and

   (iv) In equipment such as ice bins and beverage dispensing nozzles and enclosed components of equipment such as ice makers, cooking oil storage tanks and distribution lines, beverage and syrup dispensing lines or tubes, coffee bean grinders, and water vending equipment:

      (I) At a frequency specified by the manufacturer; or

      (II) Absent manufacturer specifications, at a frequency necessary to preclude accumulation of soil or mold.

(c) **Cooking and Baking Equipment.**

1. The food-contact surfaces of cooking and baking equipment shall be cleaned at least every 24 hours. This subsection does not apply to hot oil cooking and filtering equipment if it is cleaned as specified under subsection (7)(b)3(v) of this Rule.

2. The cavities and door seals of microwave ovens shall be cleaned at least every 24 hours by using the manufacturer's recommended cleaning procedure.

(d) **Nonfood-Contact Surfaces.** Nonfood-contact surfaces of equipment shall be cleaned at a frequency necessary to preclude accumulation of soil residues.

(e) **Dry Cleaning.**

1. If used, dry cleaning methods such as brushing, scraping, and vacuuming shall contact only surfaces that are soiled with dry food residues that are not time/temperature control for safety food.

2. Cleaning equipment used in dry cleaning food-contact surfaces may not be used for any other purpose.

(f) **Precleaning.**

1. Food debris on equipment and utensils shall be scraped over a waste disposal unit, or garbage receptacle or shall be removed in a warewashing machine with a prewash cycle.

2. If necessary for effective cleaning, utensils and equipment shall be preflushed, presoaked, or scrubbed with abrasives.

(g) **Loading of Soiled Items, Warewashing Machines.** Soiled items to be cleaned in a warewashing machine shall be loaded into racks, trays, or baskets or onto conveyors in a position that:

1. Exposes the items to the unobstructed spray from all cycles; and

2. Allows the items to drain.

(h) **Wet Cleaning.**

1. Equipment food-contact surfaces and utensils shall be effectively washed to remove or completely loosen soils by using the manual or mechanical means necessary such as the application of detergents containing wetting agents and emulsifiers; acid, alkaline, or abrasive cleaners; hot water; brushes; scouring pads; high-pressure sprays; or ultrasonic devices.

2. The washing procedures selected shall be based on the type and purpose of the equipment or utensil, and on the type of soil to be removed.

(i) **Washing, Procedures for Alternative Manual Warewashing Equipment.** If washing in sink compartments or a warewashing machine is impractical, such as when the equipment is fixed or the utensils are too large, washing shall be done by using alternative methods in accordance with the following procedures:

1. Equipment shall be disassembled as necessary to allow access of the detergent solution to all parts;

2. Equipment components and utensils shall be scraped or rough cleaned to remove food particle accumulation; and

3. Equipment and utensils shall be washed as specified under subsection (7)(h)1 of this Rule.

(j) **Rinsing Procedures.** Washed utensils and equipment shall be rinsed so that abrasives are removed and cleaning chemicals are removed or diluted through the use of water or a detergent-sanitizer solution by using one of the following procedures:

1. Use of a distinct, separate water rinse after washing and before sanitizing if using:

   (i) A 3-compartment sink, or

   (ii) A 3-step washing, rinsing, and sanitizing procedure in a warewashing system for CIP equipment;

2. Use of a detergent-sanitizer as specified under subsection (6)(o) of this Rule if using a warewashing system for CIP equipment;

3. If using a warewashing machine that does not recycle the sanitizing solution as specified under paragraph 4 of this subsection, or alternative manual warewashing equipment such as sprayers, use of a nondistinct water rinse must be:

   (i) Integrated in the application of the sanitizing solution, and

   (ii) Wasted immediately after each application; or

4. If using a warewashing machine that recycles the sanitizing solution for use in the next wash cycle, use of a nondistinct water rinse that is integrated in the application of the sanitizing solution.

(8) **Sanitization of Equipment and Utensils.**

(a) **Before Use After Cleaning.** Utensils and food-contact surfaces of equipment shall be sanitized before use after cleaning. **P**

(b) **Hot Water and Chemical.** After being cleaned, equipment food-contact surfaces and utensils shall be sanitized in:

1. Hot water manual operations by immersion for at least 30 seconds in water at a temperature of 171°F (77°C) or above; **P**

2. Hot water mechanical operations by being cycled through equipment that is set up as specified under subsections (6)(e), (l), and (m) of this Rule and achieving a utensil surface temperature of 160ºF (71ºC) as measured by an irreversible registering temperature indicator; **P** or

3. Chemical manual or mechanical operations, including the application of sanitizing chemicals by immersion, manual swabbing, brushing, or pressure

spraying methods, using a solution as specified under subsection (6)(n) of this Rule. Contact times shall be consistent with those on EPA-registered label use instructions by providing:

(i) Except as specified under paragraph 3(ii) of this subsection, an contact time of at least 10 seconds for a chlorine solution specified under subsection (6)(n)1 of this Rule; **P**

(ii) A contact time of at least seven seconds for a chlorine solution of 50 ppm that has pH of 10 or less and a temperature of at least 100ºF (38ºC) or a pH of 8 or less and a temperature of at least 75ºF (24ºC); **P**

(iii) A contact time of at least 30 seconds for other chemical sanitizing solutions; **P** or

(iv) A contact time used in relationship with a combination of temperature, concentration, and pH that, when evaluated for efficacy, yields sanitization. **P**

(9) **Laundering.**

(a) **Clean Linens.** Clean linens shall be free from food residues and other soiling matter.

(b) **Specifications.**

1. Linens that do not come in direct contact with food shall be laundered between operations if they become wet, sticky, or visibly soiled.

2. Cloth gloves used in direct contact with foods that will be subsequently cooked shall be laundered before being used with a different type of raw animal food such as beef, fish, lamb, pork or poultry.

3. Linens, used to line a container for service of food, that come in direct contact with food and cloth napkins shall be laundered between each use.

4. Wet wiping cloths shall be laundered daily.

5. Dry wiping cloths shall be laundered as necessary to prevent contamination of food and clean serving utensils.

(c) **Storage of Soiled Linens.** Soiled linens shall be kept in clean, nonabsorbent receptacles or clean, washable laundry bags and stored and transported to prevent contamination of food, clean equipment, clean utensils, and single-service and single-use articles.

(d) **Mechanical Washing and Drying.**

1. Except as specified in paragraph 2 of this subsection, all linens shall be mechanically washed.

2. In food service establishments in which only wiping cloths are laundered as specified in subsection (3)(e)2 of this Rule, the wiping cloths may be laundered in a mechanical washer, sink designated only for laundering wiping cloths, or a warewashing sink that is cleaned before and after use.

(e) **Use of Laundry Facilities.**

1. Except as specified in paragraph 2 of this subsection, laundry facilities on the premises of a food service establishment shall be used only for the washing and drying of items used in the operation of the establishment.

2. Separate laundry facilities located on the premises for the purpose of general laundering such as for institutions providing boarding and lodging may also be used for laundering food service establishment items.

(10) **Protection of Clean Items.**

(a) **Equipment and Utensils, Air-Drying Required.** After cleaning and sanitizing, equipment and utensils:

1. Shall be air-dried or used after adequate draining before contact with food; and

2. May not be cloth dried except that utensils that have been air-dried may be polished with cloths that are maintained clean and dry.

(b) **Wiping Cloths, Air-Drying Locations.** Wiping cloths laundered in a food service establishment that does not have a mechanical clothes dryer shall be air-dried in a location and in a manner that prevents contamination of food, equipment, utensils, linens, and single-service and single-use articles and the wiping cloths. This subsection does not apply if wiping cloths are stored after laundering in a sanitizing solution.

(c) **Food-Contact Surfaces.** Lubricants shall be applied to food-contact surfaces that require lubrication in a manner that does not contaminate food-contact surfaces.

(d) **Equipment.** Equipment shall be reassembled so that food-contact surfaces are not contaminated.

(e) **Equipment, Utensils, Linens, and Single-Service and Single-Use Articles**.

1. Except as specified in paragraph 4 of this subsection, cleaned equipment and utensils, laundered linens, and single-service and single-use articles shall be stored:

   (i) In a clean, dry location;

   (ii) Where they are not exposed to splash, dust, or other contamination; and

   (iii) At least 6 inches (15 centimeters) above the floor.

2. Clean equipment and utensils shall be stored as specified under paragraph 1 of this subsection and shall be stored:

   (i) In a self-draining position that allows air drying; and

   (ii) Covered or inverted.

3. Single-service and single-use articles shall be stored as specified under paragraph 1 of this subsection and shall be kept in the original protective package or stored by using other means that afford protection from contamination until used.

4. Items that are kept in closed packages may be stored less than 6 inches (15 centimeters) above the floor on dollies, pallets, racks, and skids that are designed as specified under subsection (2)(hh) of this Rule.

(f) **Prohibitions.**

1. Except as specified in paragraph 2 of this subsection, cleaned and sanitized equipment, utensils, laundered linens, and single-service and single-use articles may not be stored in or under any source of contamination, including in locker rooms, in toilet rooms, in garbage rooms, in mechanical rooms, under sewer lines, under leaking water lines including leaking automatic fire sprinkler heads or under lines on which water has condensed; under open stairwells; or under other sources of contamination.

2. Laundered linens and single-service and single-use articles that are packaged or in a facility such as a cabinet may be stored in a locker room.

(g) **Kitchenware and Tableware.**

1. Single-service and single-use articles and cleaned and sanitized utensils shall be handled, displayed, and dispensed so that contamination of food- and lip-contact surfaces is prevented.

2. Knives, forks, and spoons that are not pre-wrapped shall be presented so that only the handles are touched by employees and by consumers if consumer self-service is provided.

3. Except as specified under paragraph 2 of this subsection, single-service articles that are intended

   for food- or lip-contact shall be furnished for consumer self-service with the original individual wrapper intact or from an approved dispenser.

(h) **Soiled and Clean Tableware.** Soiled tableware shall be removed from consumer eating and drinking areas and handled so that clean tableware is not contaminated.

(i) **Preset Tableware.**

1 . Except as specified in subsection 2(i) below, tableware that is preset shall be protected from contamination by being wrapped, covered, or inverted.

2. Preset tableware may be exposed if:

   (i) Unused settings are removed when a consumer is seated; or

   (ii) Settings not removed when a consumer is seated are cleaned and sanitized before further use.

(j) After being cleaned and sanitized, equipment and utensils shall not be rinsed before air drying, unless:

(i) The rinse is applied directly from a potable water supply by a warewashing machine that is maintained and operated as specified under subsections (2) and (6) of this Rule; and

(ii) The rinse is applied only after the equipment and utensils have been sanitized by the application of hot water or by the application of a chemical sanitizer solution whose EPA-registered label use instructions call for rinsing off the sanitizer after it is applied in a commercial warewashing machine.

Cite as Ga. Comp. R. & Regs. R. 511-6-1-.05
Authority: O.C.G.A. §§ 26-2-373, 31-2A-6.
History. Original Rule entitled "Equipment and Utensils" adopted. F. Oct. 9, 2015; eff. Oct. 29, 2015.

Rule 511-6-1-.06. Sanitary Facilities and Controls.

(1) Water Supply.

(a) Approved System. Enough potable water for the needs of the food service establishment shall be provided from an approved source that is a public water system; p or a nonpublic water system that is constructed, maintained and operated according to applicable state or local codes as amended.[p]

(b) System Flushing and Disinfection. A potable water system shall be flushed and disinfected before being placed in service after construction, repair, or modification and after an emergency situation, such as a flood, or water interruption event that may introduce contaminants to the system.[p]

(c) Bottled Drinking Water. Bottled and packaged potable water shall be obtained from a source that complies with all laws and shall be handled and stored in a way that protects it from contamination.[p] Bottled and packaged potable water shall be dispensed from the original container.

(d) Standards. Except as specified under subsection (1)(e) of this Rule:

1. Water from a public water system shall meet 40 CFR 141 - National Primary Drinking Water Regulations and state drinking water quality standards;[p] and

2. Water from a nonpublic water system shall meet state drinking water quality standards or as applicable as established by the department.[p]

(e) Nondrinking Water. A non-potable water supply may be used for nonculinary purposes such as air conditioning, nonfood equipment cooling, fire protection, and irrigation.[P]

(f) Non-Public Water Supply - Approved Wells.

1. Sampling. Except when used as specified under subsection (1)(e) of this Rule water from a non-public water system shall be sampled and tested in accordance with requirements as established by the department,[Pf] and

2. Sampling Report. The most recent sample report for the non-public water system shall be retained on file in the food service establishment or the report shall be maintained as specified by the Department.

(g) Capacity.

1. The water source and system shall be of sufficient capacity to meet the peak water demands of the food service establishment.[Pf]

2. Hot water generation and distribution systems shall be sufficient to meet the peak hot water demands throughout the food service establishment.[Pf]

(h) Pressure. Water under pressure shall be provided to all fixtures, equipment, and nonfood equipment that are required to use water except that water supplied as specified under subsection(1)(k)1 and 2 to a temporary food service operation or in response to a temporary interruption of a water supply need not be under pressure.[Pf]

(i) System. Water shall be received from the source through the use of:

1. An approved public water main;[Pf] or

2. One or more of the following that shall be constructed, maintained, and operated according to law:[Pf]

   (i) Nonpublic water main, water pumps, pipes, hoses, connections, and other appurtenances,[Pf]

   (ii) Water transport vehicles,[Pf] or

   (iii) Water containers.[Pf]

(j) Alternative Water Supply. Water meeting the requirements specified under subsections (1)(a) - (i) of this Rule shall be made available for a mobile food service establishment's base of operation, for a temporary food service establishment without a permanent water supply, and for a food service establishment with a temporary interruption of its water supply through:

1. A supply of containers of commercially bottled drinking water;[Pf]

2. One or more closed portable water containers;[Pf]

3. An enclosed vehicular water tank;[Pf]

4. An on-premises water storage tank;[Pf] or

5. Piping, tubing, or hoses connected to an adjacent approved source.[Pf]

(2) Plumbing System.

(a) Approved.

1. A plumbing system and hoses conveying water shall be constructed and repaired with approved materials according to law.[P]

2. A water filter shall be made of safe materials.[Pf]

(b) Approved System and Cleanable Fixtures.

1. A plumbing system shall be designed, constructed, and installed according to law.[P]

2. A plumbing fixture such as a handwashing sink, toilet, or urinal shall be easily cleanable.

(c) Handwashing Sink Installation.

1. A handwashing sink shall be equipped to provide tempered water at a temperature of at least 100ºF (38ºC) through a mixing valve or combination faucet.[Pf]

2. A steam mixing valve may not be used at a handwashing sink.

3. A self-closing, slow-closing, or metering faucet shall provide a flow of water for at least 15 seconds without the need to reactivate the faucet.

4. An automatic handwashing facility shall be installed in accordance with manufacturer's instructions.

(d) Backflow Prevention, Air Gap. An air gap between the water supply inlet and the flood level rim of the plumbing fixture, equipment or nonfood equipment shall be at least twice the diameter of the water supply inlet and may not be less than 1 inch (25 mm).[P]

(e) Backflow Prevention Device, Design Standard. A backflow or backsiphonage prevention device installed on a water supply system shall meet American Society of Sanitary Engineering (A.S.S.E.) standards for construction, installation, maintenance, inspection, and testing for that specific application and type of device.[P]

(f) Conditioning Device, Design. A water filter, screen, and other water conditioning device installed on water lines shall be located to facilitate disassembly for periodic servicing and cleaning. A water filter element shall be of the replaceable type.

(g) Handwashing Sinks, Numbers and Capacities.

1. Except as specified in paragraph 2 of this subsection, at least one handwashing sink, a number of handwashing sinks necessary for their convenient use by employees in areas specified under subsection (2)(l) of this Rule, and not fewer than the number of handwashing sinks required by law shall be provided.[Pf]

2. If approved and capable of removing the types of soils encountered in the food operations involved, automatic handwashing facilities may be substituted for handwashing sinks in a food service establishment that has at least one handwashing sink.

(h) Toilets and Urinals, Numbers and Capacities.

1. Toilet facilities shall be provided for food employees.

2. All toilet facilities shall be installed in accordance with applicable State or local plumbing code as amended, and shall be the number required by such code.

3. In toilet facilities that have exit doors with handles or knobs that must be touched to open, sanitary towels must be provided.

4. In all establishments with dining facilities on the premises and permitted since July 31, 1995, patrons' toilet facilities shall be provided. Access to patrons' toilet facilities shall not be through food service, preparation, storage, or warewashing areas.

5. Toilets shall be located on or within 200 feet of the premises. Off-premises toilets must be approved by the Health Authority.

(i) Service Sinks, Numbers and Capacities. At least one service sink or one curbed cleaning facility equipped with a floor drain shall be provided and conveniently located for the cleaning of mops or similar wet floor cleaning tools and for the disposal of mop water and similar liquid waste. Toilets and urinals may not be used as a service sink for the disposal of mop water and similar liquid waste.

(j) Backflow Prevention Device, When Required. A plumbing system shall be installed to preclude backflow of a solid, liquid, or gas contaminant into the water supply system at each point of use at the food service establishment, including on a hose bib if a hose is attached or on a hose bib if a hose is not attached and backflow prevention is required by law, by:

1. Providing an air gap;[P] or

2. Installing an approved backflow prevention devices.[P]

(k) Backflow Prevention Device, Carbonator.

1. If not provided with an air gap as specified under subsection (2)(d) of this Rule a double check valve with an intermediate vent preceded by a screen of not less than 100 mesh to 1 inch (100 mesh to 25.4 mm) shall be installed

upstream from a carbonating device and downstream from any copper in the water supply line.[P]

2. A single or double check valve attached to the carbonator need not be of the vented type if an air gap or vented backflow prevention device has been otherwise provided as specified under paragraph 1 of this subsection.

(l) Handwashing Sinks, Location and Placement. A handwashing sink shall be located:

1. To allow convenient use by employees in food preparation, food dispensing, and warewashing areas;[Pf] and

2. In, or immediately adjacent to, toilet rooms.[Pf]

(m) Backflow Prevention Device, Location. A backflow prevention device shall be located so that it may be serviced and maintained.

(n) Conditioning Device, Location. A water filter, screen, and other water conditioning device installed on water lines shall be located to facilitate disassembly for periodic servicing and cleaning.

(o) Using a Handwashing Sink.

1. A handwashing sink shall be maintained so that it is accessible at all times for employee use.[Pf]

2. A handwashing facility may not be used for purposes other than handwashing.[Pf]

3. An automatic handwashing facility shall be used in accordance with manufacturer's instructions.[Pf]

(p) Prohibiting a Cross Connection.

1. A person may not create a cross connection by connecting a pipe or conduit between the drinking water system and a nondrinking water system or a water system of unknown quality.[P]

2. The piping of a nondrinking water system shall be durably identified so that it is readily distinguishable from piping that carries drinking water.[Pf]

(q) Scheduling Inspection and Service for a Water System Device. A device such as a water treatment device or backflow preventer shall be scheduled for inspection and service, in accordance with manufacturer's instructions and as necessary to

prevent device failure based on local water conditions, and records demonstrating inspection and service shall be maintained by the person in charge.[Pf]

(r) System Maintained in Good Repair. A plumbing system shall be repaired according to law;[P] and maintained in good repair.

(3) Mobile Water Tank and Mobile Food Service Unit Water Tanks.

(a) Approved. Materials that are used in the construction of a mobile water tank, mobile food service unit water tank, and appurtenances shall be:

1. Safe;[P]

2. Durable, corrosion-resistant, and nonabsorbent; and

3. Finished to have a smooth, easily cleanable surface.

(b) Enclosed System, Sloped to Drain. A mobile water tank shall be:

1. Enclosed from the filling inlet to the discharge outlet; and

2. Sloped to an outlet that allows complete drainage of the tank.

(c) Inspection and Cleaning Port, Protected and Secured. If a water tank is designed with an access port for inspection and cleaning, the opening shall be in the top of the tank and:

1. Flanged upward at least one-half inch (13 mm); and

2. Equipped with a port cover assembly that is:

(i) Provided with a gasket and a device for securing the cover in place, and

(ii) Flanged to overlap the opening and sloped to drain.

(d) "V" Type Threads, Use Limitation. A fitting with "V" type threads on a water tank inlet or outlet shall be allowed only when a hose is permanently attached.

(e) Tank Vent, Protected. If provided, a water tank vent shall terminate in a downward direction and shall be covered with:

1. 16 mesh to 1 inch (16 mesh to 25.4 mm) screen or equivalent when the vent is in a protected area; or

2. A protective filter when the vent is in an area that is not protected from windblown dirt and debris.

(f) Inlet and Outlet, Sloped to Drain.

1. A water tank and its inlet and outlet shall be sloped to drain.

2. A water tank inlet shall be positioned so that it is protected from contaminants such as waste discharge, road dust, oil, or grease.

(g) Hose, Construction and Identification. A hose used for conveying drinking water from a water tank shall be:

1. Safe;[P]

2. Durable, corrosion-resistant, and nonabsorbent;

3. Resistant to pitting, chipping, crazing, scratching, scoring, distortion, and decomposition;

4. Finished with a smooth interior surface; and

5. Clearly and durably identified as to its use if not permanently attached.

(h) Filter, Compressed Air. A filter that does not pass oil or oil vapors shall be installed in the air supply line between the compressor and drinking water system when compressed air is used to pressurize the water tank system.[P]

(i) Protective Cover or Device. A cap and keeper chain, closed cabinet, closed storage tube, or other approved protective cover or device shall be provided for a water inlet, outlet, and hose.

(j) Mobile Food Service Unit Tank Inlet. A mobile food service unit's water tank inlet shall be:

1. Three-fourths inch (19.1 mm) in inner diameter or less; and

2. Provided with a hose connection of a size or type that will prevent its use for any other service.

(k) System Flushing and Sanitization. A water tank, pump, and hoses shall be flushed and sanitized before being placed in service after construction, repair, modification, and periods of nonuse.[P]

(l) Using a Pump and Hoses, Backflow Prevention. A person shall operate a water tank, pump, and hoses so that backflow and other contamination of the water supply are prevented.

(m) Protecting Inlet, Outlet, and Hose Fitting. If not in use, a water tank and hose inlet and outlet fitting shall be protected using a cover or device as specified under subsection (3)(i) of this Rule.

(n) Tank, Pump, and Hoses, Dedication.

1. Except as specified in paragraph 2 of this subsection, a water tank, pump, and hoses used for conveying drinking water shall be used for no other purpose.[P]

2. Water tanks, pumps, and hoses approved for liquid foods may be used for conveying drinking water if they are cleaned and sanitized before they are used to convey water.

(4) Sewage, Other Liquid Waste, and Rainwater.

(a) Mobile Holding Tank, Capacity and Drainage. A sewage holding tank ona mobile food service unit shall be:

1. Sized 15 percent larger in capacity than the water supply tank; and

2. Sloped to a drain that is 1 inch (25 mm) in inner diameter or greater, equipped with a shut-off valve.

(b) Establishment Drainage System. Food service establishment drainage systems, including grease traps, that convey sewage shall be designed and installed as specified under subsection (2)(b)1 of this Rule.

(c) Backflow Prevention.

1. Except as specified in paragraphs 2, 3, and 4 of this subsection, a direct connection may not exist between the sewage system and a drain originating from equipment in which food, portable equipment, or utensils are placed.[P]

2. The requirement in paragraph 1 of this subsection does not apply to floor drains that originate in refrigerated spaces that are constructed as an integral part of the building.

3. If allowed by law, a warewashing machine may have a direct connection between its waste outlet and a floor drain when the machine is located within 5 feet (1.5 m) of a trapped floor drain and the machine outlet is connected to the inlet side of a properly vented floor drain trap.

4. If allowed by law, a warewashing or culinary sink may have a direct connection.

(d) Grease Trap. If used, a grease trap shall be located to be easily accessible for cleaning.

(e) Conveying Sewage. Sewage shall be conveyed to the point of disposal through an approved sanitary sewage system or other system, including use of sewage transport vehicles, waste retention tanks, pumps, pipes, hoses, and connections that are constructed, maintained, and operated according to law.[P]

(f) Removing Mobile Food Service Wastes. Sewage and other liquid wastes shall be removed from a mobile food service unit at an approved waste servicing area in such a way that a public health hazard or nuisance is not created.[Pf]

(g) Flushing a Waste Retention Tank. A tank for liquid waste retention shall be thoroughly flushed and drained in a sanitary manner during the servicing operation.

(h) Approved Sewage Disposal System. Sewage shall be disposed through an approved facility that is:

1. A public sewage treatment plant;[P] or

2. An individual sewage disposal system that is sized, constructed, maintained, and operated according to law.[P]

(i) Other Liquid Wastes and Rainwater. Condensate drainage and other nonsewage liquids and rainwater shall be drained from point of discharge to disposal according to law.

(5) Refuse, Recyclables, And Returnables.

(a) Indoor Storage Area. If located within the food service establishment, a storage area for refuse, recyclables, and returnables shall meet the requirements specified under DPH Rule 511-6-1-.07(1) and (2).

(b) Outdoor Storage Surface. An outdoor storage surface for refuse, recyclables, and returnables shall be constructed of nonabsorbent material such as concrete or asphalt and shall be smooth, durable, and sloped enough to drain to prevent the collection of surface water.

(c) Outdoor Enclosure. If used, an outdoor enclosure for refuse, recyclables, and returnables shall be constructed of durable and cleanable materials.

(d) Receptacles.

1. Except as specified in paragraph 2 of this subsection, receptacles and waste handling units for refuse, recyclables, and returnables and for use with

materials containing food residue shall be durable, cleanable, insect- and rodent-resistant, leakproof, and nonabsorbent.

2. Plastic bags and wet strength paper bags may be used to line receptacles for storage inside the food service establishment, or within closed outside receptacles.

(e) Receptacles in Vending Machines. Except for a receptacle for beverage bottle crown closures, a refuse receptacle may not be located within a vending machine.

(f) Outside Receptacles.

1. Receptacles and waste handling units for refuse, recyclables, and returnables used with materials containing food residue and used outside the food service establishment shall be designed and constructed to have tight-fitting lids, doors, or covers.

2. Receptacles and waste handling units for refuse and recyclables such as an on-site compactor shall be installed so that accumulation of debris and insect and rodent attraction and harborage are minimized and effective cleaning is facilitated around and, if the unit is not installed flush with the base pad, under the unit.

(g) Storage Areas, Rooms, and Receptacles, Capacity and Availability.

1. An inside storage room and area, outside storage area and enclosure, and receptacles shall be of sufficient capacity to hold refuse, recyclables, and returnables that accumulate.

2. A receptacle shall be provided in each area of the food service establishment or premises where refuse is generated or commonly discarded, or where recyclables or returnables are placed.

3. If disposable towels are used at handwashing sinks, a waste receptacle shall be located at each handwashing sink or group of adjacent sinks.

(h) Toilet Room Receptacle, Covered. A toilet room used by females shall be provided with a covered receptacle for sanitary napkins.

(i) Cleaning Implements and Supplies.

1. Except as specified in paragraph 2 of this subsection, suitable cleaning implements and supplies such as high pressure pumps, hot water, steam, and detergent shall be provided as necessary for effective cleaning of receptacles and waste handling units for refuse, recyclables, and returnables.

2. If approved, off-premises-based cleaning services may be used if on-premises cleaning implements and supplies are not provided.

(j) Storage Areas, Redeeming Machines, Receptacles and Waste Handling Units, Location.

1. An area designated for refuse, recyclables, returnables, and, except as specified in paragraph 2 of this subsection, a redeeming machine for recyclables or returnables shall be located so that it is separate from food, equipment, utensils, linens, and single-service and single-use articles and a public health hazard or nuisance is not created.

2. A redeeming machine may be located in the packaged food storage area or consumer area of a food service establishment if food, equipment, utensils, linens, and single-service and single-use articles are not subject to contamination from the machines and a public health hazard or nuisance is not created.

3. The location of receptacles and waste handling units for refuse, recyclables, and returnables may not create a public health hazard or nuisance or interfere with the cleaning of adjacent space.

(k) Storing Refuse, Recyclables, and Returnables. Refuse, recyclables, and returnables shall be stored in receptacles or waste handling units so that they are inaccessible to insects and rodents.

(l) Areas, Enclosures, and Receptacles, Good Repair. Storage areas, enclosures, and receptacles for refuse, recyclables, and returnables shall be maintained in good repair.

(m) Outside Storage Prohibitions.

1. Except as specified in paragraph 2 of this subsection, refuse receptacles not meeting the requirements specified under subsection (5)(d)1 of this Rule such as receptacles that are not rodent-resistant, unprotected plastic bags and paper bags, or baled units that contain materials with food residue may not be stored outside.

2. Cardboard or other packaging material that does not contain food residues and that is awaiting regularly scheduled delivery to a recycling or disposal site may be stored outside without being in a covered receptacle if it is stored so that it does not create a rodent harborage problem.

(n) Covering Receptacles. Receptacles and waste handling units for refuse, recyclables, and returnables shall be kept covered:

1. Inside the food service establishment if the receptacles and units:
   (i) Contain food residue and are not in continuous use; or
   (ii) After they are filled; and
2. With tight-fitting lids or doors if kept outside the food service establishment.

(o) Using Drain Plugs. Drains in receptacles and waste handling units for refuse, recyclables, and returnables shall have drain plugs in place.

(p) Maintaining Refuse Areas and Enclosures. A storage area and enclosure for refuse, recyclables, or returnables shall be maintained free of unnecessary items and clean.

(q) Cleaning Receptacles.

1. Receptacles and waste handling units for refuse, recyclables, and returnables shall be thoroughly cleaned in a way that does not contaminate food, equipment, utensils, linens, or single-service and single-use articles, and waste water shall be disposed of as specified under subsection (4)(e) of this Rule.
2. Soiled receptacles and waste handling units for refuse, recyclables, and returnables shall be single-use articles.[P]

Cite as Ga. Comp. R. & Regs. R. 511-6-1-.06
Authority: O.C.G.A. §§ 26-2-373, 379, 31-2A-6.
History. Original Rule entitled "Sanitary Facilities and Controls" adopted. F. Oct. 9, 2015; eff. Oct. 29, 2015.
Amended: F. Jan. 25, 2023; eff. Feb. 24, 2023, as specified by the Agency.

Rule 511-6-1-.07. Physical Facilities.

(1) **Materials for Construction and Repair.**

(a) **Indoor Materials.** Materials for indoor floor, wall, and ceiling surfaces under conditions of normal use shall be:

1. Smooth, durable, and easily cleanable for areas where food service establishment operations are conducted;
2. Closely woven and easily cleanable carpet for carpeted areas; and

3. Nonabsorbent for areas subject to moisture such as food preparation areas, walk-in refrigerators, warewashing areas, toilet rooms, mobile food service unit servicing areas, and areas subject to flushing or spray cleaning methods.

(b) **Outdoor Surfaces.**

1. The outdoor walking and driving areas shall be surfaced with concrete, asphalt, or gravel or other materials that have been approved by the Health Authority and have been graded to drain.

2. Exterior surfaces of buildings shall be of weather-resistant materials and shall comply with law.

(2) **Design, Construction, and Installation.**

(a) **Floors, Walls, and Ceilings, Cleanability.** Except as specified under subsection (2)(d) of this Rule and except for antislip floor coverings or applications that may be used for safety reasons, floors, floor coverings, walls, wall coverings, and ceilings shall be designed, constructed, and installed so they are smooth and easily cleanable.

(b) **Utility Lines.**

1. Utility service lines and pipes may not be unnecessarily exposed.

2. Exposed utility service lines and pipes shall be installed so they do not obstruct or prevent cleaning of the floors, walls, or ceilings.

3. Exposed horizontal utility service lines and pipes may not be installed on the floor.

(c) **Floor and Wall Junctures, Coved, and Enclosed or Sealed.**

1. In food service establishments in which cleaning methods other than water flushing are used for cleaning floors, the floor and wall junctures shall be coved and closed to no larger than one thirty-second inch (1 mm).

2. The floors in food service establishments in which water flush cleaning methods are used shall be provided with drains and be graded to drain, and the floor and wall junctures shall be coved and sealed.

(d) **Floor Carpeting, Restrictions and Installation.**

1. A floor covering such as carpeting or similar material may not be installed as a floor covering in food preparation areas, walk-in refrigerators, warewashing areas, toilet room areas where handwashing sinks, toilets, and

urinals are located, refuse storage rooms, or other areas where the floor is subject to moisture, flushing, or spray cleaning methods.

2. If carpeting is installed as a floor covering in areas other than those specified under paragraphs 1 of this subsection, it shall be:

   (i) Securely attached to the floor with a durable mastic, by using a stretch and tack method, or by another method; and

   (ii) Installed tightly against the wall under the coving or installed away from the wall with a space between the carpet and the wall and with the edges of the carpet secured by metal stripping or some other means.

(e) **Floor Covering, Mats and Duckboards.** Mats and duckboards shall be designed to be removable and easily cleanable.

(f) **Wall and Ceiling Coverings and Coatings.**

1. Wall and ceiling covering materials shall be nonabsorbent, light colored, and attached so that they are easily cleanable.

2. Except in areas used only for dry storage. concrete, porous blocks, or bricks used for indoor wall construction shall be finished and sealed to provide a smooth, nonabsorbent, easily cleanable surface.

(g) **Walls and Ceiling, Attachments.**

1. Except as specified in paragraphs 2 of this subsection, attachments to walls and ceilings such as light fixtures, mechanical room ventilation system components, vent covers, wall mounted fans, decorative items, and other attachments shall be easily cleanable.

2. In a consumer area, wall and ceiling surfaces and decorative items and attachments that are provided for ambiance need not meet this requirement if they are kept clean.

(h) **Walls and Ceilings, Studs, Joists, and Rafters.** Except for temporary food service establishments, studs, joists, and rafters may not be exposed in areas subject to moisture.

(i) **Light Bulbs, Protective Shielding.**

1. Except as specified in paragraph 2 of this subsection, light bulbs shall be shielded, coated, or otherwise shatter-resistant in areas where there is

exposed food; clean equipment, utensils, and linens; or unwrapped single-service and single-use articles.

2. Shielded, coated, or otherwise shatter-resistant bulbs need not be used in areas used only for storing food in unopened packages, if:

   (i) The integrity of the packages cannot be affected by broken glass falling onto them; and

   (ii) The packages are capable of being cleaned of debris from broken bulbs before the packages are opened.

3. An infrared or other heat lamp shall be protected against breakage by a shield surrounding and extending beyond the bulb so that only the face of the bulb is exposed.

(j) **Heating, Ventilating, Air Conditioning, System Vents.** Heating, ventilating, and air conditioning systems shall be designed and installed so that make-up air intake and exhaust vents do not cause contamination of food, food-contact surfaces, equipment, or utensils.

(k) **Insect Control Devices, Design and Installation.**

1. Insect control devices that are used to electrocute or stun flying insects shall be designed to retain the insect within the device.

2. Insect control devices shall be installed so that:

   (i) The devices are not located over a food preparation area; and

   (ii) Dead insects and insect fragments are prevented from contact with exposed food; clean equipment, utensils, and linens; and unwrapped single-service and single-use articles.

(l) **Toilet Rooms, Enclosed.** Except where a toilet room is located outside a food service establishment and does not open directly into the food service establishment, such as a toilet room that is provided by the management of a shopping mall, a toilet room located on the premises shall be completely enclosed and provided with a tight-fitting and self-closing door.

(m) **Outer Openings, Protected.**

1. Except as specified in paragraphs 2 through 5 of this subsection, outer openings of a food service establishment shall be protected against the entry of insects and rodents by:

(i) Filling or closing holes and other gaps along floors, walls, and ceilings;

(ii) Closed, tight-fitting windows; and

(iii) Solid, self-closing, tight-fitting doors.

2. The requirements in paragraph 1 of this subsection does not apply if a food service establishment opens into a larger structure, such as a mall, airport, or office building, or into an attached structure, such as a porch, and the outer openings from the larger or attached structure are protected against the entry of insects and rodents.

3. Exterior doors used as exits need not be self-closing if they are:

   (i) Solid and tight-fitting;

   (ii) Designated for use only when an emergency exists, by the fire protection authority that has jurisdiction over the food establishment; and

   (iii) Limited-use so they are not used for entrance or exit from the building for purposes other than the designated emergency exit use.

4. Except as specified in paragraphs 2 and 5 of this subsection, if the windows or doors of a food service establishment, or of a larger structure within which a food service establishment is located, are kept open for ventilation or other purposes or a temporary food service establishment is not provided with windows and doors as specified under paragraph 1 of this subsection, the openings shall be protected against the entry of insects and rodents by:

   (i) 16 mesh to 1 inch (16 mesh to 25.4 mm) screens;

   (ii) Properly designed and installed air curtains to control flying insects; or

   (iii) Other effective means.

5. The requirement in paragraph 4 of this subsection does not apply if flying insects and other pests are absent due to the location of the establishment, the weather, or other limiting condition.

(n) **Exterior Walls and Roofs, Protective Barrier.** Perimeter walls and roofs of a food service establishment shall effectively protect the establishment from the weather and the entry of insects, rodents, and other animals.

(o) **Outdoor Food Vending Areas, Overhead Protection.** Except for machines that vend canned beverages, if located outside, a machine used to vend food shall be provided with overhead protection.

(p) **Outdoor Walking and Driving Surfaces, Graded to Drain.** Exterior walking and driving surfaces shall be graded to drain.

(q) **Outdoor Refuse Areas, Curbed and Graded to Drain.** Outdoor refuse areas shall be constructed in accordance with Law and shall be curbed and graded to drain to collect and dispose of liquid waste that results from the refuse and from cleaning the area and waste receptacles.

(r) **Private Homes and Living or Sleeping Quarters, Use Prohibition.** A private home kitchen, a room used as living or sleeping quarters, or an area directly opening into a room used as living or sleeping quarters shall not be used for conducting food service establishment operations. **P**

(s) **Living or Sleeping Quarters, Separation.** Living or sleeping quarters located on the premises of a food service establishment such as those provided for lodging registration clerks or resident managers shall be separated from rooms and areas used for food service establishment operations by complete partitioning and solid self-closing doors.

(3) **Numbers and Capacities.**

(a) **Handwashing Cleanser, Availability.** Each handwashing sink or group of two adjacent handwashing sinks shall be provided with a supply of hand cleaning liquid, powder, or bar soap. **Pf**

(b) **Hand Drying Provision.** Each handwashing sink or group of adjacent handwashing sinks shall be provided with:

1. Individual, disposable towels; **Pf**

2. A continuous towel system that supplies the user with a clean towel; **Pf**

3. A heated-air hand drying device; **Pf** or

4. A hand drying device that employs an air-knife system that delivers high velocity, pressurized air at ambient temperatures. **Pf**

(c) **Handwashing Aids and Devices, Use Restrictions.** A sink used for food preparation or utensil washing, or a service sink or curbed cleaning facility used for the disposal of mop water or similar wastes, may not be provided with the handwashing aids and devices required for a handwashing sink.

(d) **Handwashing Signage.** A sign or poster that notifies food employees to wash their hands shall be provided at all handwashing sinks used by food employees and shall be clearly visible to food employees.

(e) **Toilet Tissue, Availability.** A supply of toilet tissue shall be available at each toilet. [Pf]

(f) **Lighting Intensity.** The light intensity shall be:

1. At least 10 foot candles (108 lux) at a distance of 30 inches (75 cm) above the floor, in walk-in refrigeration units and dry food storage areas and in other areas and rooms during periods of cleaning;

2. At least 20 foot candles (215 lux):

   (i) At a surface where food is provided for consumer self-service such as buffets and salad bars or where fresh produce or packaged foods are sold or offered for consumption;

   (ii) Inside equipment such as reach-in and under-counter refrigerators;

   (iii) At a distance of 30 inches (75 cm) above the floor in areas used for handwashing, warewashing, and equipment and utensil storage, and in toilet rooms; and

3. At least 50 foot candles (540 lux) at a surface where a food service employee is working with food or working with utensils or equipment such as knives, slicers, grinders, or saws where employee safety is a factor.

(g) **Mechanical Ventilation.** If necessary to keep rooms free of excessive heat, steam, condensation, vapors, obnoxious odors, smoke, and fumes, mechanical ventilation of sufficient capacity shall be provided.

(h) **Dressing Areas and Lockers.**

1. Dressing rooms or dressing areas shall be designated and used if employees routinely change their clothes in the establishment.

2. Lockers or other suitable facilities shall be provided and used for the orderly storage of employees' clothing and other possessions.

(4) **Location and Placement.**

(a) **Toilet Rooms Convenience and Accessibility.** Toilet rooms shall be conveniently located and accessible to employees during all hours of operation.

(b) **Designated Areas for Employee Activity.**

1. Areas designated for employees to eat, drink, and use tobacco shall be located so that food, equipment, linens, and single-service and single-use articles are protected from contamination.

2. Lockers or other suitable facilities shall be located in a designated room or area where contamination of food, equipment, utensils, linens and single-service and single-use articles cannot occur.

(c) **Segregation and Location.** Products that are held by permit holder for credit, redemption, or returned to the distributor, such as damaged, spoiled, or recalled products, shall be segregated and held in designated areas that are separated from food, equipment, utensils, linens, and single-service and single-use articles. **Pf**

(5) **Maintenance and Operation.**

(a) **Good Repair.** All physical facilities shall be maintained in good repair.

(b) **Cleaning, Frequency and Restrictions.**

1. The physical facilities shall be cleaned as often as necessary to keep them clean and by methods that prevent contamination of food products.

2. Except for cleaning that is necessary due to a spill or other accident, cleaning shall be done during periods when the least amount of food is exposed, such as after closing.

3. If present, playground equipment and associated areas shall be maintained in a clean and sanitary condition. Further, a plan for employees to follow when responding to vomiting and diarrheal events shall be included and submitted at the time of permit application as specified in DPH Rule 511-6-1-.02(1)(c). **Pf**

(c) **Dustless Methods of Cleaning Floors.**

1. Only dustless methods of cleaning shall be used, such as wet cleaning, vacuum cleaning, mopping with treated dust mops, or sweeping using a broom and dust-arresting compounds, except for emergency spills that occur between normal cleaning times.

2. Spills or drippage on floors that occur between normal floor cleaning times may be cleaned: without the use of dust-arresting compounds; and in the case of liquid spills or drippage, with the use of a small amount of absorbent compound such as sawdust or diatomaceous earth applied immediately before spot cleaning.

(d) **Cleaning Ventilation Systems, Nuisance and Discharge Prohibition.** Intake and exhaust air ducts shall be cleaned and filters changed so they are not a source of contamination by dust, dirt, and other materials. If vented to the outside, ventilation systems may not create a public health hazard or nuisance or unlawful discharge.

(e) **Cleaning Maintenance Tools, Preventing Contamination.** Food preparation sinks, handwashing sinks, and warewashing equipment may not be used for the cleaning of maintenance tools, the preparation or holding of maintenance materials, or the disposal of mop water and similar

(f) **Drying Mops.** After use, mops shall be placed in a position that allows them to air-dry without soiling walls, equipment, or supplies.

(g) **Absorbent Materials on Floors, Use Limitation.** Except as specified in subsection (5)(c)2 of this Rule, sawdust, wood shavings, granular salt, baked clay, diatomaceous earth, or similar materials may not be used on floors.

(h) **Cleaning of Plumbing Fixtures.** Plumbing fixtures such as handwashing sinks, toilets, and urinals shall be cleaned as often as necessary to keep them clean and maintained.

(i) **Closing Toilet Room Doors.** Except during cleaning and maintenance operations, toilet room doors as specified under subsection (2)(l) of this Rule shall be kept closed.

(j) **Using Dressing Rooms and Lockers**.

1. Dressing rooms shall be used by employees if the employees regularly change their clothes in the establishment.

2. Lockers or other suitable facilities shall be used for the orderly storage of employee clothing and other possessions.

(k) **Controlling Pests.** The presence of insects, rodents, and other pests shall be controlled to minimize their presence on the premises by:

1. Routinely inspecting incoming shipments of food and supplies;

2. Routinely inspecting the premises for evidence of pests;

3. Using methods, if pests are found, such as trapping devices or other means of pest control asspecified under subsections (6)(e), (6)(m), and (6)(n) of this Rule; **Pf** and

4. Eliminating harborage conditions.

(l) **Removing Dead or Trapped Birds, Insects, Rodents, and Other Pests.** Dead or trapped birds, insects, rodents, and other pests shall be removed from control devices and the premises at a frequency that prevents their accumulation, decomposition, or the attraction of pests.

(m) **Maintenance Tools.** Maintenance tools such as brooms, mops, vacuum cleaners, and similar items shall be:

1. Stored so they do not contaminate food, equipment, utensils, linens, and single-service and single-use articles; and

2. Stored in an orderly manner that facilitates cleaning the area used for storing the maintenance tools.

3. If wet, placed in a position that allows them to air-dry without soiling walls, equipment, or supplies.

(n) **Maintaining Premises.** The premises shall be free of items that are unnecessary to the operation or maintenance of the establishment, such as litter or equipment that is nonfunctional or no longer used.

(o) **Prohibiting Animals.**

1. Except as specified in paragraphs 2, 3, and 4 of this subsection, live animals may not be allowed on the premises of a food service establishment. **Pf**

2. Live animals may be allowed in the following situations if the contamination of food, clean equipment, utensils, and linens; and unwrapped single-service and single-use articles cannot result:

   (i) Edible fish or decorative fish in aquariums, shellfish or crustacea on ice or under refrigeration, and shellfish and crustacea in display tank systems;

   (ii) Patrol dogs accompanying police or security officers in offices and dining, sales, and storage areas, and sentry dogs running loose in outside fenced areas;

   (iii) In areas that are not used for food preparation and that are usually open for customers, such as dining and sales areas, service animals that are controlled by the disabled employee, person or trainer of such animal, if a health or safety hazard will not result from the presence or activities of the service animal;

   (iv) Pets in the common dining areas of group residences or institutional care facilities at times other than during meals if:

(I) Effective partitioning and self-closing doors separate the common dining areas from food storage or food preparation areas; and

(II) Condiments, equipment, and utensils are stored in enclosed cabinets or removed from the common dining areas when pets are present; and

(III) Dining areas including tables, countertops, and similar surfaces are effectively cleaned before the next meal service; and

(v) In areas that are not used for food preparation, storage, sales, display, or dining, in which there are caged animals or animals that are similarly restricted, such as in a variety store that sells pets or a tourist park that displays animals.

(vi) Pet dogs may be allowed in outside dining areas of a food service establishment that are accessed from the outside of the establishment under the following conditions:

(I) The food service establishment prepares written procedures that include:

I. A diagram of the outdoor area to be designated as available to consumers with pet dogs; [Pf]

II. The establishment's procedure for assuring that employees do not touch, pet or otherwise handle pet dogs and for immediately cleaning accidents involving dog waste. The procedure must also describe the location of materials and equipment necessary to clean up accidents involving dog waste; [Pf] and

III. The establishment's procedure for notifying employees and consumers of the requirements of this paragraph. [Pf]

(II) Pet dogs may not come into contact with serving dishes, utensils and tableware. Pet dogs are also not allowed on chairs, tables and other furnishings. [Pf]

(III) Employees and consumers may not provide food to pet dogs. Pf

(IV) Pet dogs must be on a leash and under control of the consumer at all times. Pf

(V) At no time may pet dogs be permitted to travel through the indoor or non-designated outdoor portions of the food establishment. Pf

3. Live or dead fish bait may be stored if contamination of food; clean equipment, utensils, and linens; and unwrapped single-service and single-use articles cannot result.

(6) **Poisonous or Toxic Materials.**

(a) **Original Containers, Identifying Information.** Containers of poisonous or toxic materials shall bear a legible manufacturer's label. **Pf**

(b) **Working Containers, Common Name.** Working containers used for storing poisonous or toxic materials such as cleaners and sanitizers taken from bulk supplies shall be clearly and individually identified with the common name of the material. **Pf**

(c) **Storage, Separation.** Poisonous or toxic materials shall be stored so they cannot contaminate food, equipment, utensils, linens, and single-service and single-use articles by:

1. Separating the poisonous or toxic materials by spacing or partitioning; **P** and

2. Locating the poisonous or toxic materials in an area that is not above food, equipment, utensils,

   linens, and single-service or single-use articles. This requirement does not apply to equipment and utensil cleaners and sanitizers that are stored in warewashing areas for availability and convenience if the materials are stored to prevent contamination of food, equipment, utensils, linens, and single-service and single-use articles. **P**

(d) **Restriction.**

1. Only those poisonous or toxic materials that are required for the operation and maintenance of the food service establishment, such as for the cleaning

and sanitizing of equipment and utensils, and the control of insects and rodents shall be allowed in a food service establishment. **Pf**

2. The requirement in paragraph 1of this subsection does not apply to packaged poisonous or toxic materials that are for retail sale.

(e) **Conditions of Use.**

1. Poisonous or toxic materials shall be used according to:

   (i) Law and this Chapter;

   (ii) Manufacturer's use directions included in labeling, and, for a pesticide, manufacturer's label instructions that state that use is allowed in a food service establishment, **P**

   (iii) The conditions of certification, if certification is required, for use of the pest control materials, **P** and

   (iv) Additional conditions that may be established by the Health Authority; and

2. Be applied so that:

   (i) A hazard to employees or other persons is not created, **P** and

   (ii) Contamination including toxic residues due to drip, drain, fog, splash or spray on food, equipment, utensils, linens, and single-service and single-use articles is prevented, and for a restricted use pesticide, this is achieved by: **P**

      (I) Removing the items, **P**

      (II) Covering the items with impermeable covers, **P** or

      (III) Taking other appropriate preventive actions, **P** and

      (IV) Cleaning and sanitizing equipment and utensils after the application. **P**

3. A restricted use pesticide shall be applied only by an applicator certified as defined in 7 USC 136 Definitions, (e) Certified Applicator, of the Federal Insecticide, Fungicide, and Rodenticide Act, or a person under the direct supervision of a certified applicator. **Pf**

(f) **Poisonous or Toxic Materials Containers, Prohibition.** A container previously used to store poisonous or toxic materials shall not be used to store, transport, or dispense food. **P**

(g) **Chemical Sanitizers, Criteria.** Chemical sanitizers, including chemical sanitizing solutions generated on-site, and other chemical antimicrobials applied to food-contact surfaces shall:

1. Meet requirements specified in 40 CFR 180.940 Tolerance exemptions for active and inert ingredients for use in antimicrobial formulations (Food-contact surface sanitizing solutions) **P, or**

2. Meet the requirements as specified in 40 CFR 180.2020 Pesticide Chemicals Not Requiring a Tolerance or Exemption from Tolerance-Non-food determinations. **P**

(h) **Chemicals for Washing, Treatment, Storage, and Processing Fruits and Vegetables, Criteria.**

1. Chemicals, including those generated on-site, used to wash or peel raw, whole fruits and vegetables shall:

   (i) Be an approved food additive listed for this intended use in 21 CFR 173, P or

   (ii) Be generally recognized as safe (GRAS) for this intended use, P or

   (iii) Be the subject of an effective food contact notification for this intended use (only effective for the manufacturer or supplier identified in the notification), P and

   (iv) Meet the requirements in 40 CFR 156 Labeling Requirements for Pesticide and Devices. P

2. Ozone as an antimicrobial agent used in the treatment, storage, and processing of fruits and vegetables in a food service establishment shall meet the requirements specified in 21 CFR 173.368 Ozone. **P**

(i) **Boiler Water Additives, Criteria.** Chemicals used as boiler water additives shall meet the requirements specified in 21 CFR 173.310 Boiler Water Additives. **P**

(j) **Drying Agents, Criteria.** Drying agents used in conjunction with sanitization shall:

1. Contain only components that are listed as one of the following:

(i) Generally recognized as safe for use in food as specified in 21 CFR 182 - Substances Generally Recognized as Safe, or 21 CFR 184 - Direct Food Substances Affirmed as Generally Recognized as Safe, **P**

(ii) Generally recognized as safe for the intended use as specified in 21 CFR 186 - Indirect Food Substances Affirmed as Generally Recognized as Safe, **P**

(iii) Generally recognized as safe for the intended use as determined by experts qualified in scientific training and experience to evaluate the safety of substances added, directly or indirectly, to food as described in 21 CFR 170.30 Eligibility for classification as generally recognized as safe (GRAS), **P**

(iv) Subject of an effective Food Contact Notification as described in the Federal Food Drug and Cosmetic Act (FFDCA) Section 409 (h); **P**

(v) Approved for use as a drying agent under a prior sanction as described in the Federal Food Drug and Cosmetic Act (FFDCA) § 201(s) (4); **P**

(vi) Specifically regulated as an indirect food additive for use as a drying agent as specified in 21 CFR 175- 178, **P** or

(vii) Approved for use as a drying agent under the threshold of regulation process established by 21 CFR 170.39 Threshold of regulation for substances used in food-contact articles; **P** and

2. When sanitization is with chemicals, the approval required under paragraphs 1(v) or 1(vii) of this subsection or the regulation as an indirect food additive required under paragraph 1(vi) of this subsection, shall be specifically for use with chemical sanitizing solutions. **P**

(k) **Lubricants, Incidental Food Contact Criteria.** Lubricants shall meet the requirements specified in 21 CFR 178.3570 Lubricants with incidental food contact, if they are used on food-contact surfaces, on bearings and gears located on or within food-contact surfaces, or on bearings and gears that are located so that lubricants may leak, drip, or be forced into food or onto food-contact surfaces. **P**

(l) **Restricted Use Pesticides, Criteria.** Restricted use pesticides specified under subsection (6)(e)3 of this Rule shall meet the requirements specified in 40 CFR 152 Subpart I.

(m) **Rodent Bait Stations.** Rodent bait shall be contained in a covered, tamper-resistant bait station. **P**

(n) **Tracking Powders, Pest Control and Monitoring.** A tracking powder pesticide may not be used in a food service establishment. **P** If a nontoxic tracking powder such as talcum or flour is used, it shall not be allowed to contaminate food, equipment, utensils, linens, or single-service and single-use articles.

(o) **Medicines, Restriction and Storage.**

1. Except for medicines that are stored or displayed for retail sale, only those medicines that are necessary for the health of employees shall be allowed in a food service establishment. **Pf**

2. Medicines that are in a food service establishment for the employee's use shall be labeled with a legible manufacturer's label and located to prevent the contamination of food, equipment, utensils, linens, and single-service and single-use articles; and located so they are inaccessible to children. **P**

(p) **Refrigerated Medicines, Storage.** Medicines belonging to employees or that require refrigeration and are stored in a food refrigerator shall be stored in a package or container and kept inside a covered, leakproof container that is identified as a container for the storage of medicines. **P**

(q) **First-aid Supplies, Storage.** First-aid supplies that are in a food service establishment for the employee's use shall be:

1. Labeled with the manufacturer's label; **Pf** and

2. Stored in a kit or a container that is located to prevent the contamination of food, equipment, utensils, and linens, and single-service and single-use articles. **P**

(r) **Other Personal Care Items, Storage.** Except as specified under subsections (6)(p) and (6)(q) of this Rule, employees shall store their personal care items in lockers or other facilities for orderly storage.

(s) **Stock and Retail Sale.** Poisonous or toxic materials shall be stored and displayed for retail sale so they cannot contaminate food, equipment, utensils, linens, and single-service and single-use articles by:

1. Separating the poisonous or toxic materials by spacing or partitioning; **P** and

2. Locating the poisonous or toxic materials in an area that is not above food, equipment, utensils, linens, and single-service or single-use articles. **P**

Cite as Ga. Comp. R. & Regs. R. 511-6-1-.07
Authority: O.C.G.A. §§ 26-2-373, 31-2A-6.
History. Original Rule entitled "Physical Facilities" adopted. F. Oct. 9, 2015; eff. Oct. 29, 2015.

Rule 511-6-1-.08. Special Food Service Operations.

(1) Mobile Food Service Units and Extended Food Service Units.

(a) Compliance Required. Mobile food service units and extended food service units shall comply with the requirements of this Chapter, except as otherwise provided in this subsection and as specified under subsection (1)(b) of this Rule.[Pf] After review of a proposed menu, plans and specifications, and the proposed method of operation, the Health Authority may:

1. Impose additional requirements to protect against health hazards related to the conduct of the food service establishment as a mobile operation;

2. Prohibit the sale of some or all time/temperature control for safety food, or

3. When no health hazard will result, modify requirements of this Rule relating to physical facilities, except those requirements specified under subsections (1)(e) and (f) of this Rule.

(b) Exceptions to Compliance for Mobile and Extended Food Service Units.

1. General. Mobile food service units, such as vehicle venders, and extended food service units may be exempt from the requirements of this Chapter pertaining to the necessity of water and sewage systems and to those requirements pertaining to the cleaning and sanitization, if the following conditions are met:

(i) The required equipment for cleaning and sanitization exists at their permitted base of operation;[Pf] and

(ii) Menus shall be limited to food that is prepared, prepackaged and labeled in individual servings, transported and stored; or

(iii) Beverages that are not time/temperature control for safety foods that are dispensed from covered urns or other protected equipment all under conditions meeting the requirements of the Chapter.[P]

2. Push Carts. Push carts may be exempted from the requirements of subsection (1)(g)1 of this Rule if the following conditions for push carts are met:

(i) The menu shall be limited to only service of commercially prepared and prepackaged time/temperature control for safety foods such as frankfurters, precooked encased sausages, and similar approved foods requiring heating only;[P]

(ii) All food shall be protected from customer handling, coughing, sneezing or other contamination by wrapping, using food shields or other effective barriers. Condiments must be dispensed in single service type packaging, in pump-style dispensers, or in protected squeeze bottles, shakers, or similar dispensers which prevent contamination of the food items by food employees, consumers, insects, or other sources of contamination;[P]

(iii) No cooking equipment shall be allowed at the food vending location of carts. Heating equipment will be limited to steam or hot water heating equipment that meets the requirements of this Chapter;[Pf]

(iv) At a minimum, overhead protection such as an umbrella large enough to fully cover and protect the entirety of the cart, employee and any cart associated equipment such as food storage, handwashing, etc., shall be provided for the cart's onsite operation;[Pf]

(v) Properly installed and equipped handwashing facilities meeting the requirements of this Chapter must be installed on carts. Potable hot and cold running water under pressure with suitable hand cleaner, dispensed paper towels, and a waste receptacle must be provided at or near the handwashing facility;[Pf] However, certified commercially manufactured, portable hand washing stations may be allowed for onsite operational use with the cart upon approval by the Health Authority.

(vi) With the approval of the Health Authority, accessory components such as hard plastic coolers that are NSF listed or certified for commercial use with sufficient ice for cold time/temperature control for safety foods and NSF listed;[Pf]

(vii) In use equipment and utensils must be cleaned and sanitized at least every 4 hours; therefore, carts shall be equipped with at least a 3-compartmented sink dedicated for the purpose of cleaning and sanitizing of equipment and utensils. However, in lieu of the 3-compartmented sink being installed on the cart and as deemed acceptable by the Health Authority, the permit holder may provide an adequate supply of clean and sanitized equipment and utensils stored in such a way on the cart so as to protect them from

contamination, if the required equipment for cleaning and sanitization exists at its base of operation;[Pf]

(viii) Push Carts must be designed, constructed and built to at least NSF Standard 59;[Pf] and

(ix) Push Carts must be supplied with one day's operational supply of hot and cold potable water under pressure and waste water storage capacity of 15% larger than that of the potable water tank. The potable water storage tank shall have at least 10 gallons storage capacity and may be required by the Health Authority to have a larger storage volume depending on length of time in which the cart is used away from the base of operation.[P]

(x) Stored food, utensils and equipment, single-service and single-use supplies, and hand washing supplies shall be protected from environmental contamination during transportation of the Push Cart from location to location.[Pf]

(c) Equipment and Supplies Required for Onboard Preparation of more complex menus.

1. Units preparing time/temperature control for safety foods on the unit other than the limited menu items stated within subsection (1)(b) of this Rule shall utilize thermostatically controlled heating, cooling, and freezing equipment for those foods stored or displayed on the unit requiring controlled heating or refrigeration.[Pf]

2. Indicating thermometers for immersion into food or cooking media shall be of metal stem type construction, numerically scaled, and accurate to ±2 degrees Fahrenheit.[Pf]

3. Each unit must have two separate types of sinks, one for hand-washing and the other for warewashing.[Pf]

4. Mobile food service units and extended food service units shall provide only individually wrapped single-service articles for use by the consumer.[Pf]

(d) Water System.

1. A mobile food service unit and extended food service unit requiring a water system shall have a potable water system as specified under DPH Rule 511-6-1-.06(1), and the water system shall be under pressure.[Pf]

2. Mobile water tanks and mobile food service unit water tanks shall meet all the requirements specified under DPH Rule 511-6-1-.06(3) as it relates to materials, design, construction, installation, numbers and capacities, and operation and maintenance of these tanks.[Pf]

3. The system shall be of sufficient capacity to furnish enough hot and cold water for food preparation, utensil cleaning and sanitizing, and handwashing in accordance with the requirements of this regulation.[Pf]

(e) Liquid Waste. The sewage holding tanks for all mobile food service units and extended food service units, and all sewage and liquid waste resulting from the operation of a mobile food service unit or extended food service units shall meet the requirements of and be handled as specified under DPH Rule 511-6-1-.06(4)(a), (e), (f), (g), (h) and (i) as it relates to capacity, drainage, design, construction, installation, operation, maintenance and sewage disposal.[Pf]

(f) Operation.

1. A mobile food service unit shall operate from its permitted base of operation and report daily or more often if needed to such location to service their unit for supplies, fresh water, cleaning, waste water disposal, and any other and servicing operations.[P]

2. An extended food service unit shall operate as an extension of its permitted base of operation.[P]

3. An extended food service unit shall be serviced daily from the base of operation.

4. The base of operation or fixed food service establishment used as a base of operation for mobile food units and extended food service units shall be constructed and operated in conjunction with the mobile food service unit or extended food service unit under the active managerial control of a single permit holder to be in compliance with the requirements of this Chapter.[P]

5. Toilet facilities must be available for employee's use and, as applicable, consumer use along the route of food vending locations as per requirements found in DPH Rule 511-6-1-.06(2)(h). In addition and to the satisfaction of the Health Authority, the permit holder must maintain and provide a list of toilet facilities available to the unit food vending locations.[Pf]

6. When not in use, mobile food service units shall be properly stored at the base of operation or other location approved by the Health Authority.[Pf]

(g) Construction Based Upon Menu.

1. Units preparing and serving time/temperature control for safety foods other than that stated in subsection (1)(b) of this Rule shall be so constructed that the operator must prepare and serve food from within the protective environment of a fully enclosed area of the unit such as that provided for in a fully enclosed trailer.[P] Except that units preparing non-time/temperature control for safety foods such as snow cones and popcorn shall be constructed so that the food preparation and service areas are protected from potential contamination by means of closable cabinets.[Pf]

2. The service area requirements are as follows:

   (i) A mobile food service unit servicing area shall be available at its base of operation; except, a servicing area will not be required where only packaged food is placed on the mobile food service unit or where mobile food units do not contain waste retention tanks as stated in subsection (1)(b)1 of this Rule;[Pf]

   (ii) Except for areas used only for the loading of water or the discharge of sewage and other liquid waste through the use of a closed system of hoses, servicing areas shall be provided with overhead protection;[Pf]

   (iii) There shall be a location and equipment for the flushing and drainage of liquid wastes separate from the location and equipment provided for water servicing and for the loading and unloading of food and related supplies.[Pf] Requirements for sizing and location of equipment for flushing and drainage of liquid wastes and for equipment to provide potable water servicing of units shall be as specified within the most current editions of the Interpretative Manuals as referenced within DPH Rule 511-6-1-.02(10);

   (iv) The surface of the servicing area shall be constructed of a smooth, nonabsorbent material, such as concrete or machine-laid and sealed asphalt and shall be maintained in good repair, kept clean, and be graded to drain; and

   (v) The construction of the walls and ceilings of the servicing areas is exempted from the provisions of DPH Rule 511-6-1-.07(2)(a) through (f).

   (vi) Toilet and handwashing facilities that meet the requirements of this Chapter shall be available for employees at the servicing area.[Pf]

(h) Identification.

1. All mobile food service units and extended food service units shall be identified by a sign or lettering indicating the name and address of the owner, the operator and the permit number. Letters and numbers must be at least two inches high.

2. The permit, or copy thereof, and the current inspection report must be displayed for public view and protected from inclement weather.

3. The mobile food service unit authorization to operate shall be made available by the permit holder and shall be provided to the Health Authority upon request.

(i) Food Vending Location.

1. Food vending location requirements are as follows:

(i) Listings for mobile food service unit and extended food service unit food vending locations shall be maintained by the permit holder and shall be provided to the Health Authority. Permit holders shall notify the Health Authority at least 7 days prior to any changes in food vending locations.[Pf]

(ii) The operator must provide evidence of legal access and use of the premises for food vending; and

(iii) If applicable, permit applicants must provide documentation of compliance with another jurisdiction's requirements.

2. Those units functioning under permits granted to food service establishments and operating on their premises as an extension thereof may be allowed, at the Health Authority's discretion to meet lesser restrictions if sanitation, temperature control, and sanitization requirements for operation of the unit are satisfactorily met at the food service establishment.

(j) Compliance with Other Regulations. The operation must comply with all applicable regulations and ordinances.[Pf]

(k) Home Prepared Foods Prohibited. Home prepared foods or condiments may not be sold, served, or used on mobile food service units.[P]

(2) Temporary Food Service Establishments.

(a) Operation, Permit Application, Responsibilities.

1. A temporary food service establishment means a food service establishment that operates at the same location for a period of no more than 14 consecutive days in conjunction with a single event or celebration.[P]

2. The application for a special food service permit shall indicate the inclusive dates of the proposed operation and must be submitted at least 30 days prior to the event.[Pf]

3. The following applies to a vendor application:

   (i) Any person desiring to operate a temporary food service establishment shall make written application for a permit on forms provided by the Health Authority at least 30 days prior to the event and pay applicable fees at the time of application.

   (ii) The application shall include the name and address of each applicant, the location and type of the proposed temporary food service establishment, a list of all menu items and the signature of the applicant.

4. The organizer's responsibility is the following:

   (i) Ensure that only vendors permitted by the Health Authority are allowed to participate in the event,[P]

   (ii) The organizer and property owner must notify the Health Authority 30 days prior to the event taking place and provide a list of food vendors who will be allowed by that organizer to participate in the event.[Pf]

   (iii) Ensure that any unauthorized or unpermitted vendor found participating in an event shall immediately leave the event premises and shall be charged with a violation of this Rule.[P]

(b) Inspections.

1. Prior to issuance of a permit, the Health Authority shall inspect the proposed temporary food service establishment. The Health Authority shall only issue a permit to the applicant if the inspection reveals that the proposed temporary food service establishment complies with this Rule.

2. Temporary food service inspections will be conducted as often as necessary to ensure compliance with this Rule.

3. The permit, or copy thereof, and the current inspection report must be displayed for public view and protected from inclement weather.

(c) Operations.

1. A temporary food service establishment which does not comply fully with Rules .03 through .07 of this Chapter may be permitted to operate when food preparation, service and the operation meet fully the requirements set forth in DPH Rule 511-6-1-.08(2)(a) through (h).[P]

2. The Health Authority may impose additional requirements to protect against health hazards related to the conduct of the temporary food service establishment.

3. Preparation processes for time/temperature control for safety foods will be approved by the Health Authority based on a plan review that shows adequate holding, preparation and service facilities.[Pf]

4. For special events, foods requiring only cooking may be prepared, if served immediately, in an outside area on the premises of a permitted food service establishment. Prior approval must be obtained from the Health Authority.[P]

(d) Preparation and Service - Time/Temperature Control for Safety Foods - Prohibited Menu Items.

1. Fixed Permitted Food Service Establishments. Any time/temperature control for safety food that has been prepared, stored and transported under conditions meeting the requirements of this Chapter, is stored at a temperature of 41°F (5°C) or below or at a temperature of 135°F (57°C) or above in facilities meeting the requirements of this Chapter may be served.[P]

2. Temporary Onsite Preparation and Service. All food prepared and served onsite of a temporary establishment must comply with the following:

(i) Only those time/temperature control for safety foods requiring limited preparation, such as hamburgers and frankfurters that only require seasoning and cooking, may be prepared or served;[P]

(ii) Once cooked, time/temperature control for safety foods shall not be touched by employee bare hands and must be maintained at 135°F or higher until served;[P]

(iii) Prior to service to the consumer, commercially prepared, precooked, and prepackaged time/temperature control for safety foods may be reheated thoroughly to at least 135°F for 15 seconds;[P] and

(iv) Time as a Public Health Control shall not be allowed in a temporary food service establishment.[P]

3. Menu Item Prohibition. The preparation or service of the following menu items are prohibited from service onsite of a temporary establishment:

   (i) Except for paragraph 2 of this subsection, other ready-to-eat, time/temperature control for safety foods, including pastries filled with cream or synthetic cream, custards, and similar products, and salads or sandwiches containing meat, poultry, eggs, or fish is prohibited.[P] This prohibition does not apply to any time/temperature control for safety food that has been prepared and packaged under conditions meeting the requirements of this Chapter, is obtained in individual servings at 135°F (57°C) or above, or 41°F (5°C) or below in facilities meeting the requirements of this Chapter, and is served directly to the consumer in the unopened container in which it was packaged.[P]

   (ii) Home prepared foods or condiments may not be sold, served, or used in temporary food service unit establishments.[P]

(e) Equipment and Supplies Required.

1. Indicating thermometers for immersion into food or cooking media shall be of metal stem type construction, numerically scaled, and accurate to ±2 degrees Fahrenheit.

2. Enough potable water shall be available at the event for consumption and in the establishment for food preparation, cleaning, and sanitizing utensils and equipment, and for handwashing.[P]

3. Ice shall be handled as follows:

   (i) Ice that is consumed or that contacts food shall be made under conditions meeting the requirements of this Chapter,[P]

   (ii) The ice shall be obtained only in chipped, crushed, or cubed form and in single-use safe plastic or wet strength paper bags filled and sealed at the point of manufacture,[P]

   (iii) The ice shall be held in these bags until it is dispensed in a way that protects it from contamination,[P] and

(iv) Storage of packaged or wrapped food in contact with water or undrained ice is prohibited.[P]

4. Temporary food service operations shall provide only individually wrapped single-service articles for use by the consumer.[Pf]

5. A heating facility capable of producing enough hot water shall be provided on the premises.[Pf]

6. Equipment shall be located and installed in a way that prevents food contamination and that also facilitates cleaning the establishment.[Pf]

7. Food-contact surfaces of equipment shall be protected from contamination by consumers and other contaminating agents. Effective shields for such equipment shall be provided, as necessary, to prevent contamination.[P]

8. Facilities for cleaning and sanitizing utensils and equipment shall be provided at the temporary site or permitted base of operation. Such items shall be cleaned and sanitized at least daily or more often if prescribed by the Health Authority.[Pf]

9. When food is prepared on the site, a system capable of producing enough hot water for cleaning and sanitizing utensils and equipment shall be provided on the premises. Such systems shall consist of:

   (i) a water heater properly sized according to the needs of the establishment as established by interpretative and guidance manuals referenced within DPH Rule 511-6-1-.02(8);[Pf] or

   (ii) a gas or electric stove or burner with a container of water;[Pf] or

   (iii) other means as determined by the Health Authority.[Pf]

10. A convenient handwashing facility shall be available for employee handwashing. This facility shall consist of, at least, a catch bucket, a pressurized or gravity fed supply of warm water, soap, and individual paper towels at the service site.[Pf]

(f) Liquid Waste. All sewage including liquid waste shall be disposed of as specified under DPH Rule 511-6-1-.06(4)(h) and (i).[P]

(g) Construction.

1. Floors within food preparation and display areas shall be constructed of concrete, asphalt, tight wood, or other similar material, and shall be kept clean in good repair.

2. Doors to food preparation areas shall be solid or screened and shall be self-closing or as otherwise approved by the Health Authority.

3. Screening material used for walls, doors, or windows shall be at least 16 mesh to the inch.

4. Air curtains shall be properly designed and installed, and approved by the Health Authority.

5. Ceilings shall be made of wood or other material that protects the interior of the establishment from the weather.[Pf]

6. Walls and ceilings of food preparation areas shall be constructed in a way that prevents the entrance of insects.

(h) Protection from Contamination.

1. Approved means of excluding insect and vermin from food preparation, service areas and from waste storage areas must be provided commensurate with the type and scope of food service permitted.[Pf]

2. Counter-service openings shall not be larger than necessary for the particular operation conducted.

3. Counter-service openings shall be provided with effective means to restrict the entrance of flying insects.

4. Counter-service openings shall be kept closed when not in actual use, except that these openings may remain open if air curtains are provided as deemed adequate by the Health Authority.

5. All food preparation and food display areas shall be adequately protected from dust, contamination by patrons, and from insects by provision of walls, ceilings, shields, screens or other approved barriers or devices.[Pf]

6. Open, unprotected display or service of food is prohibited.[P]

(3) Incubator Food Service Operations. A permit holder or a permit applicant may seek a variance from the provisions in DPH Rule 511-6-1-.02(1)(a)4. in order to operate an incubator food service establishment only if, as an alternative to DPH Rule 511-6-1-.02(1)(a)4., the permit holder or permit applicant provides a written management plan along with the necessary supportive documentation that specifies standard operating

procedures (SOP) in detail to the satisfaction of the Health Authority as to how active managerial control of risk-factors and public health interventions for foodborne illness along with maintenance of equipment and facilities will be maintained to the requirements of this Chapter.[P] Incubator food service operations shall comply with other requirements of this Chapter in addition to the requirements of one of the following business models:[P]

(a) Business Model A. The permit holder must ensure the following:

1. Submit to the Health Authority for review and approval a written management plan that contains a Standard Operating Plan (SOP) and supporting documents that adequately provides: managerial oversight of contractual employees activities, control of risk factors for foodborne illness, handwashing policy, employee health policies, the prevention of any potential cross-contamination of equipment and food resulting from multiuse of food service equipment and utensils, and the ability for the Health Authority to conduct trace back in the event of a foodborne illness involving the establishment. The written managerial plan or SOP must include the following minimum items:[P]

(i) Incubatee/member Contract. A written contract between the permit holder and the incubatee/member must be signed by the permit holder and each incubatee/member prior to incubatee/member being allowed access to the establishment. This written contract must include the following items:[P]

(I) The permit holder must acknowledge its responsibility for all food produced within its establishment from the time that it receives the food and supplies up to and including the service of prepared food to its consumers;[P]

(II) The permit holder may not disclaim any liability for food prepared within the food service establishment;[P]

(III) The Active Managerial Control Plan (SOP) along with supporting documents must be made, directly or by reference, part of the written contract.[P]

(ii) Active Managerial Control Plan and SOP. The SOP will contain not less than the following items:

(I) A statement as to the maximum number of incubatees/members that will use the establishment per day or per shift;[Pf]

(II) A statement as to the ratio of management staff to the number of incubatees/members using the establishment per day or per shift;[Pf]

(III) A statement as to how incubatees/members and their subsidiary employees will be identified. Records listing names and contact information for each incubatee/member and their subsidiary employees must be maintained at the establishment and such records shall be made available for review upon request by the Health Authority;[Pf]

(IV) A statement as to how separation in space and time will be maintained so as no other activities, such as bakery or food processing plant activity, will be conducted at the same time food service operations are being conducted. Separation of time and space may be accomplished by equipment and facilities being physically separated into areas or rooms separated from each other by walls or partitions as acceptable to the Health Authority. In addition, separation in time and space may be accomplished by scheduling of incubators/members as acceptable to the Health Authority;[Pf]

(V) A statement as to how all employees, including any contractual employees and their subsidiary employees, will be managed so their activities will comply with this Chapter;[Pf]

(VI) A statement as to how the food service management will provide oversight of food processing from receiving to service to the consumer to ensure compliance with this Chapter. As part of this oversight but not limited to the following: food temperature control records must be maintained by the permit holder of the establishment. Food temperature charts for food product temperature control listing the date and time and temperature of food as it leaves the establishment to when it is delivered to the consumer will be maintained for review upon the request of the Health Authority. Food temperature charts shall be maintained by management within the establishment for no less than 90 days from the date of any event or service;[Pf]

(VII) A statement as to how the food service management will track consumers so they will be easily identifiable in the

event of a foodborne illness outbreak investigation. Records of events and service will be maintained within the establishment for a minimum of 90 days from the date of each event or service and will be made available upon request for review by the Health Authority;[Pf]

(VIII) A statement as to how management of the food service establishment will track and manage menus to be in compliance with DPH Rule 511-6-14-.02(1)(g). The most current menu or menus for each incubatee/member will be maintained on record at the establishment and such menu or menus will be made available for review upon request by the Health Authority. Management of the food service establishment will notify the Health Authority of menu changes as specified in DPH Rule 511-5-14-.02(1)(g);[Pf]

(IX) A statement that only those incubatees/members under active contract will be allowed access to the facilities of the establishment. Food preparation for non-commercial use such as home use will not be allowed. Non-contractual, incubatee/member use of the establishment facilities is prohibited;[Pf]

(X) A list of incubatees/members scheduled for each day must be maintained at the establishment and made available for review by the Health Authority upon request. Only these listed incubatees/members are to be present within the establishment for each scheduled day's operation;[Pf]

(XI) A statement that the permit holder shall directly employ all management of the establishment. The person in charge and the certified food safety manager (CFSM) shall be a direct employee of the permit holder;[P]

(XII) A statement as to who will monitor activities within the food service establishment must be clearly stated. Enough certified food safety managers must be present whenever the establishment is in operation. There must be shown to be adequate coverage of management or persons in charge to ensure compliance with this Chapter.[Pf] Incubatees/members cannot serve as managers, certified food safety managers (CFSMs) or as the person in charge;[P]

(XIII) A complete written plan detailing how the activities of incubatees/members will be monitored and what corrective actions will be taken should risk factors be found out of control must be included with the SOP. The activities of members must be monitored from the receiving of food and supplies to the service of food to the consumer;[Pf]

(XIV) A written employee health policy must be included within the SOP. This written employee health policy must be in compliance with DPH Rule 511-6-1-.03(4) and it must include all employees of the establishment including incubatee/members;[Pf]

(XV) A cleaning plan for all nonfood-contact surfaces of equipment. In addition, this cleaning plan shall include cleaning and sanitizing procedures and schedules for food-contact surfaces of equipment and utensils to ensure that food-contact surfaces are being cleaned and sanitized between incubatee/members use and as often as needed to be in compliance with the requirements of this Chapter;[Pf]

(XVI) A written food safety training plan for employees and incubatees/members;[Pf] and

(XVII) A floor plan showing equipment layout and food flow according to proposed menus. All areas, rooms and equipment are to be identified as to use and function. All food service plans and specifications must be reviewed and approved by the local Health Authority prior to any commencement of construction as specified within DPH Rule 511-6-1-.02(6).[Pf]

(b) Business Model B. The permit holder must ensure the following:

1. Submit to the Health Authority for review and approval a written management plan that contains a Standard Operating Procedure (SOP) and supporting documents that adequately provides: managerial oversight of contractual employees activities, control of risk factors for foodborne illness, handwashing policies, employee health policies, the prevention of any potential cross-contamination of equipment and food resulting from multiuse of food service equipment and utensils, and the ability for the Health Authority to conduct trace back in the event of a foodborne illness

involving the establishment. The written managerial plan or SOP must include the following minimum items:[P]

(i) Incubatee/member Contract. A written contract between the permit holder and the incubatee/member must be signed by the permit holder and each incubatee/member prior to incubatee/member being allowed access to the establishment. This written contract must include the following items:[P]

(I) The permit holder must acknowledge its responsibility for all food produced within its establishment from the time that it receives the food and supplies up to and including the service of prepared food to its consumers;[P]

(II) The permit holder may not disclaim any liability for food prepared within the food service establishment;[P]

(III) The Active Managerial Control Plan (SOP) along with supporting documents must be made, directly or by reference, part of the written contract.[P]

(ii) Active Managerial Control Plan and SOP. The SOP shall not contain less than the following items:

(I) A statement as to the maximum number of incubatees/members that will use the individual build out units per day or per shift;[Pf]

(II) A statement as to the ratio of management staff to the number of incubatees/members using the establishment per day or per shift;[Pf]

(III) A statement as to how incubatees/members and their subsidiary employees will be identified. Records listing names and contact information for each incubatee/member and their subsidiary employees must be maintained at the establishment and such records shall be made available for review upon request by the Health Authority;[Pf]

(IV) A statement as to how separation in space or time will be maintained so as to ensure that all food service operations are conducted within each individual incubatee/member's build-out unit. Separation of all activities, such as bakery or food processing plant activity must be accomplished by equipment and facilities being physically separated into

areas or rooms separated from each other by walls or partitions as acceptable to the Health Authority. In addition, separation in time and space may be accomplished by scheduling of incubators/members as acceptable to the Health Authority;[Pf]

(V) A statement as to how all employees, including any contractual employees and their subsidiary employees, will be managed so their activities will comply with this Chapter;[Pf]

(VI) A statement as to how the food service management will provide oversight of food processing from receiving to service to the consumer to ensure compliance with this Chapter. As part of this oversight but not limited to the following: food temperature control records must be maintained by the permit holder of the establishment. Food temperature charts for food product temperature control listing the date, time, and temperature of food as it leaves the establishment to when it is delivered to the consumer shall be maintained by management for review upon the request of the Health Authority for no less than 6 months from the date of any event or service;[Pf]

(VII) A statement as to how the food service management will track consumers so they will be easily identifiable in the event of a foodborne illness outbreak investigation. Records of events and service will be maintained within the establishment for a minimum of 90 days from the date of each event or service and will be made available upon request for review by the Health Authority;[Pf]

(VIII) A statement as to how management of the food service establishment will track and manage menus to be in compliance with DPH Rule 511-6-1-.02(1)(g) The most current menu or menus for each incubatee/member will be maintained on record at the establishment and such menu or menus will be made available for review upon request by the Health Authority. Management of the food service establishment will notify the Health Authority of menu changes as specified in DPH Rule 511-6-1-.02(1)(g);[Pf]

(IX) A statement that only those incubatees/members under active contract will be allowed access to the facilities of the establishment. Food preparation for non-commercial use such as home use will not be allowed. Non-contractual, incubatee/member use of the establishment facilities is prohibited;[Pf]

(X) A list of incubatees/members scheduled for each day according to the build-out unit they will use must be maintained at the establishment and made available for review by the Health Authority upon request. Only these listed incubatees/members are to be present within the establishment for each scheduled day's operation;[Pf]

(XI) A statement that the permit holder shall directly employ all management of the establishment. The person in charge and the certified food safety manager (CFSM) shall be a direct employee of the permit holder;[P]

(XII) A statement as to who will monitor activities within the food service establishment must be clearly stated. Enough certified food safety managers must be present whenever the establishment is in operation. There must be shown to be adequate coverage of management or persons in charge to ensure compliance with this Chapter.[Pf] Incubatees/members cannot serve as managers, certified food safety managers (CFSMs) or as the person in charge;[P]

(XIII) A complete written plan detailing how the activities of incubatees/members will be monitored and what corrective actions will be taken should risk factors be found out of control must be included with the SOP. The activities of members must be monitored from the receiving of food and supplies to the service of food to the consumer;[Pf]

(XIV) A written employee health policy must be included within the SOP. This written employee health policy must be in compliance with DPH Rule 511-6-1-.03(4) and it must include all employees of the establishment including incubatee/members;[Pf]

(XV) A cleaning plan for all nonfood-contact surfaces of equipment. In addition, this cleaning plan shall include cleaning and sanitizing procedures and schedules for food-contact surfaces of equipment and utensils to ensure that food-contact surfaces are being cleaned and sanitized between incubatee/members use and as often as needed to be in compliance with the requirements of this Chapter;[Pf]

(XVI) A written food safety training plan for employees and incubatees/members;[Pf] and

(XVII) A floor plan showing equipment layout and food flow according to proposed menus. All areas, rooms and equipment are to be identified as to use and function. All food service plans and specifications must be reviewed and approved by the local Health Authority prior to any commencement of construction as specified within DPH Rule 511-6-1-.02(6).[Pf]

(XVIII) Each incubatee/member shall show the incubator food service establishment permit holder proof of a valid permit issued by the Health Authority to a food service facility unit specified in the permit application prior to being allowed access to the specified food service building unit;[P]

(XIX) A permit will be valid for one food service build-out unit per incubatee/member and not multiple food service build-out units;[P] and

(XX) The Health Authority will be notified of food service facility build-out schedule changes.

(4) Catering Food Service Establishments.

(a) Operations.

1. Catering food service establishments shall fully comply with the requirements of DPH Rules 511-6-1-.03 through .07 in addition to the following:[P]

(I) Catering operations shall be permitted and operated separately from "food sales establishments" as defined in O.C.G.A. Section 26-2-21;[Pf] and

(II) For purposes of inspection of the base of operation and upon request by the Health Authority, catering food service establishments shall provide a quarterly schedule of events to be catered.[Pf]

2. When the catering operation involves only the preparation and delivery of food to a private party, special event, or motion picture filming location and does not include the handling of tableware and utensils or any preparation, service, or restocking of non-prepackaged foods on location at the service site, no hand washing facility is required at the service site.[Pf]

3. When the catering operation involves the handling of tableware and utensils and/or the preparation, service, or restocking of non-prepackaged foods on location at the service site, adequate handwashing facilities are required and shall consist of at least a catch bucket, a pressurized or gravity fed supply of warm water at least 100°F, soap, individual paper towels, and waste receptacle(s) that are available and conveniently located for employees' use in the areas used for food preparation, food service, and warewashing.[Pf]

4. For the duration of the catering operation, all foods, display and service utensils, and other food-contact surfaces shall be adequately protected from dust, weather conditions, insects, and human contamination through the use of walls, ceiling, shields, screens, or other approved barriers or devices.[Pf]

5. Floors within food preparation and display areas shall be constructed of concrete, asphalt, tight wood, or other similar material approved by the Health Authority, and shall be kept clean and in good repair.

6. Catered food shall not be used as an ingredient in another food or be offered for re-service or sale to another consumer. Such catered food is to be discarded to waste or may be left in the possession of the consumer for which the catered food was contracted.[P]

7. When outdoor cooking equipment is used to prepare food at the service site, such equipment shall be located adjacent to a fully enclosed food preparation area and shall comply with all applicable provisions of law. Cookers, grills, ovens or any other type of equipment used for outdoor cooking shall have a lid or other design approved by the Health Authority which protects the food from dust, weather conditions, insects, and human contamination during the cooking process. No food preparation other than seasoning shall be allowed at outdoor cooking equipment.

8. Toilet facilities must be available at the service site for employee use and, if applicable, consumer use, as provided in DPH Rule 511-6-1-.06(2)(h).

9. Except as provided in subparagraph (4)(a)(10.), supplies and equipment used at the service site shall be cleaned and serviced daily at the catering food service establishment's permitted base of operation. The shared use of facilities or equipment by two separate permit holders is prohibited.

10. A catering food service establishment that services a site, such as a filming location, more than 60 miles from its permitted base of operation for an extended period of time during which a daily return to the base of operation for service and restocking is impracticable, shall:

    (i) Utilize an on-site warewashing method for washing, rinsing, and sanitizing utensils and equipment in accordance with DPH Rule 511-6-1-.05(2), (3), and (6), which shall consist of either a portable dish washing trailer or a pre-approved, three-compartment basin system that is large enough to accommodate complete submersion of the largest utensil used at the service site; and

    (ii) Maintain and provide to the Health Authority, upon request, written procedures which:

        (I) Outline the methods of compliance with DPH Rule 511-6-1-.04(2) and (3) for deliveries received in the field;

        (II) Outline the methods of compliance with DPH Rule 511-6-1-.06(1)(j) with regard to an alternative water supply;

        (III) Outline the methods of compliance with DPH Rule 511-6-1-.06(4)(e) and (f) with regard to proper sewage disposal; and

        (IV) Describe how solid waste material and refuse from the food service operation will be stored and handled.

11. When not in use, all mobile catering units, equipment and all other supplies shall be properly stored at the base of operation or other location approved by the Health Authority.

(b) Design and Construction of Mobile Catering Units. Mobile catering units must comply with the requirements for mobile food service units set forth in DPH Rule 511-6-1-.08(1)(a) through (e), (g), (h), (j), and (k).

(c) Identification. All mobile catering units used in conjunction with catering operations for which food is prepared all or in part at the service site shall:

1. Display an adhesive sticker provided by the Department indicating that the mobile catering unit has been approved by the Health Authority for catering operations within the State of Georgia. The sticker must be located in a readily visible area on the unit and maintained in good condition; or

2. Maintain and provide to the Health Authority, upon request, a copy of the catering food service establishment's permit, which shall list the Vehicle Identification Number for each mobile catering unit used by the permit holder for the catering operation.

(d) Catering Location. A catering food service establishment shall maintain a record of each catering operation, including date, location, and menu, for at least six months after the catering operation takes place. Such records shall be provided to the Health Authority upon request.

(e) Inspections.

1. The Health Authority in the county that issued a permit to the catering food service establishment shall be responsible for conducting inspections in accordance with DPH Rule 511-6-1-.10(2).

2. The Health Authority in a county where a service site is located shall be authorized to enter any catering operation, at any reasonable time and upon proper identification, for the purpose of conducting a complaint investigation. Any food safety Risk Factor violations shall be immediately corrected on-site; and, if an imminent health hazard is discovered, food service operations may be temporarily suspended by the local Health Authority until the imminent health hazard is corrected. The permit holder shall be entitled to appeal any such suspension to the local District Health Director in accordance with DPH Rule 511-6-1-.10(1)(b).

3. Upon completion of the complaint investigation, the person in charge shall sign the report form provided by the local Health Authority. The signature of the person in charge shall not necessarily indicate agreement with any findings noted during the complaint investigation. A copy of the signed report shall be given to the person in charge and a copy shall be sent to the Health Authority in the county that issued the permit. A score shall not be given for a complaint investigation conducted in a county where a service site, but not the permitted base of operation, is located; however, blatant or repeated food safety compromises found during such complaint investigations may lead to permit suspension or revocation by the Health Authority in the county that issued the permit.

(5) "Pop-Up" Food Service Operations.

(a) Food service establishments participating in "pop-up" food service operations shall fully comply with the requirements of DPH Rules 511-6-1-.03 through .07 in addition to the following:[P]

1. Unless the food service establishment is already permitted for catering operations, it must obtain a letter of approval from the Health Authority prior to engaging in "pop-up" food service operations.

2. A food service establishment participating in a "pop-up" food service operation shall operate from its permitted base of operation.[P]

3. A food service establishment shall not operate more than 3 hours in one day at any "pop-up" location without first obtaining a mobile food service vending permit, and shall be limited to no more than 2 days per calendar week at any one "pop-up" location.

4. Only ready-to-eat foods that have been prepared, cooked, and properly containerized for transport at the permitted base of operation may be served and sold at the "pop-up" location.

5. Time/Temperature Control for Safety (TCS) foods to be served and sold at the "pop-up" location must be maintained at the following temperatures during transport and kept in approved NSF certified containers:

   (i) 41°F or less if held cold;[P] or

   (ii) 135°F or more if held hot.[P]

6. All food shall be protected from coughing, sneezing, customer handling, or other contamination through the use of effective barriers such as wrapping or food shields. Condiments shall be dispensed in single-service type packaging, in pump-style dispensers, or in protected squeeze bottles, shakers, or similar dispensers which prevent contamination of the food items by food employees, consumers, insects, or other sources.[P]

7. "Pop-up" food service operations shall provide only individually wrapped single-service tableware for use by the consumer.[Pf]

8. No cooking equipment shall be allowed at the "pop-up" food service location. Hot-holding and cold-holding equipment shall be limited to steam or hot water heating equipment or refrigerated equipment that meets the requirements of this Chapter. With the approval of the Health Authority, accessory components such as hard plastic coolers that are NSF listed or certified for commercial use and contain sufficient ice for cold TCS foods may be used; however, packaged or wrapped food shall not be stored in

contact with water or undrained ice, except for commercially packaged beverages such as canned or bottled soda or water.[Pf]

9. A food service establishment participating in a "pop-up" food service operation shall bring an adequate supply of clean and sanitized food service equipment and utensils and store them at the "pop-up" location in a way that ensures they are protected from contamination. Only food service equipment and utensils that belong to the permitted food service establishment operating at the "pop-up" location shall be used by that food service establishment during the operation. At no time shall food service equipment or utensils be shared between food service establishments.[Pf]

10. Adequate handwashing facilities are required at the "pop-up" location and shall consist of at least a catch bucket, a pressurized or gravity fed supply of warm water at least 100°F, soap, individual paper towels, and a waste receptacle that is conveniently located for use by food employees at the "pop-up" location. Wastewater from the "pop-up" food service operation shall be disposed of according to law.[Pf]

11. Copies of the permit and the current inspection report for the food service establishment's base of operation must be displayed for public view at the "pop-up" food service location.

12. Inspections of "pop-up" food service operations may be conducted as often as necessary to ensure compliance with this Rule.

13. Except for unopened commercially packaged beverages, food not sold or consumed at the "pop-up" location shall not be used as an ingredient in another food or be offered for re-service or sale to another consumer. All food from a "pop-up" food service operation shall be discarded to waste after service at the "pop-up" location has concluded for that day. P

(b) The facilitator of a "pop-up" food service operation shall obtain a letter of approval from the local Health Authority for the "pop-up" location by providing the following information at least ten business days prior to the anticipated date of operating at the selected "pop-up" location:

1. The name, title, address, and telephone number of the person directly responsible for the management of the facilitator;

2. The address of the proposed "pop-up" food service operation;

3. The method, such as an electronic ticket or other tracking method, that will be used to identify patrons purchasing food at the "pop-up" location for trace back purposes in the event of a foodborne illness;

4. A statement signed by the facilitator or authorized agent that:

   (i) Attests to the accuracy of the information provided in the application; and

   (ii) Affirms that the applicant will fulfill the obligations of a facilitator as outlined in this subsection; and

5. If the facilitator is not the owner of the proposed location of the "pop-up" food service operation, a written statement signed by the owner or authorized agent of the proposed location, giving permission for the "pop-up" food service operation to take place;

(c) A "pop-up" food service operation shall not take place in a location where the food is subject to overhead or environmental contamination,[Pf] or in a building which serves a highly susceptible population. A "pop-up" food service operation shall comply with all applicable regulations and ordinances, including access to toilet facilities which meet the requirements of DPH Rule 511-6-1-.06(2)(h).

(d) The local Health Authority shall be notified prior to any change in the facilitator of a "pop-up" food service operation.

(e) The facilitator shall maintain and make available to the local Health Authority, upon request, a list of the food service establishments participating in the "pop-up" food service operation, which shall include:

   (i) the address and food service permit number of each food service establishment;

   (ii) the dates and times of operation for each food service establishment at the "pop-up" location; and

   (iii) the menu of foods offered by each food service establishment at the "pop-up" location.

(f) The local Health Authority may, in its discretion, suspend or revoke a letter of approval for a "pop-up" food service operation if it is determined that the requirements of this Rule have not been met.

Cite as Ga. Comp. R. & Regs. R. 511-6-1-.08
Authority: O.C.G.A. §§ 26-2-373, 379, 31-2A-6.
History. Original Rule entitled "Special Food Service Operations" adopted. F. Oct. 9, 2015; eff. Oct. 29, 2015.
Amended: F. July 24, 2018; eff. August 13, 2018.
Amended: F. Oct. 1, 2018; eff. Oct. 21, 2018.
Amended: F. Sep. 25, 2020; eff. Oct. 16, 2020, as specified by the Agency.

Amended: F. Jan. 25, 2023; eff. Feb. 24, 2023, as specified by the Agency.

Rule 511-6-1-.09. Certification and Standardization of Environmental Health Personnel.

(1) **Responsibilities and Requirements.** All Environmental Health personnel who are assigned responsibilities in food service plan review, permitting, inspecting or other means of enforcing this Chapter will successfully complete and maintain current certification in:

(a) **Nationally Recognized Food Safety Training Program.** A nationally recognized food safety training program approved by the department and a professionally validated examination that is accredited by the Conference for Food Protection prior to acquiring food service program responsibilities;

(b) **Standardization Certification.** Standardization certification in food safety inspection techniques shall be obtained through a program approved by the Department within two years of acquiring food service program responsibilities. Standardization certificates shall be administered as follows:

1. Georgia Standardized Food Service Establishment Inspection Officer Certificates issued to EHS shall be valid for a five year period from the date of issuance;

2. Standardized Food Service Establishment Inspection and Training Officer Certificates shall be issued to District Standard-Trainers by the Department's State Office of Environmental Health Standard-Trainers and they shall be valid for a five year period from the date of issuance; and

3. The Department's State Office of Environmental Health Standard-Trainers shall maintain current standardization certification in retail food establishment inspections through the Food and Drug Administration (FDA). Should such FDA certification not be available, State Office of Environmental Health Standard-Trainers shall maintain at least the same level of standardization certification as specified in subsection (1)(b)2 of this Rule.

(2) **Standardization Certification Maintenance.**

(a) In order to maintain the standardization certification maintenance, Environmental Health personnel must accumulate at least 20 hours of continuing education unit credits (CEU) prior to being re-standardized.

(b) All CEU credit hours shall be evaluated by the Department's State Office of Environmental Health prior to being credited to Environmental Health personnel.

(3) **Notification of Food Service Program Responsibilities.** Local Health Authorities shall notify the Department's State Office of Environmental Health with the date that Environmental Health personnel are assigned food service program responsibilities.

(4) **Record of Training, Standardization and CEU Credit.** A record of training, standardization, and CEU credit for Environmental Health personnel shall be maintained in the office where each Environmental Health employee works. At its discretion, the Department may audit these records for compliance with this Rule.

(5) **Temporary Staffing and Emergency Response.** Environmental Health personnel must successfully complete a nationally recognized food safety training program, as stated in subsection (1) (a) of this Rule prior to conducting independent food service program duties that may occur in emergency situations such as staffing issues for temporary employee coverage, emergency response events, or widespread foodborne outbreak responses.

(6) **Non-standardized Environmental Health Personnel.** All food service program activities performed by non-standardized Environmental Health personnel, as stated in subsections (1) (b) and (4) of this Rule, shall be monitored by Environmental Health personnel who hold a valid standardization certificate as specified within subsection (1) (b) 2 of this Rule.

Cite as Ga. Comp. R. & Regs. R. 511-6-1-.09
Authority: O.C.G.A. §§ 26-2-373, 31-2A-6.
History. Original Rule entitled "Certification and Standardization of Environmental Health Personnel" adopted. F. Oct. 9, 2015; eff. Oct. 29, 2015.

Rule 511-6-1-.10. Inspections and Compliance Procedures.

(1) Suspension or Revocation of Permits. The Health Authority shall have the power to suspend or revoke a permit if the permit holder is unwilling or unable to comply with these regulations, the regulations of the local Health Authority, the provisions of O.C.G.A. Section 26-2-370 et seq., or if a violation is not corrected within a reasonable time. The notice of suspension or revocation shall be in writing and shall state the reasons in support of the action. The notice shall be delivered to the permit holder by mail or in person or, if the permit holder cannot be located, by tacking a copy to the front door of the food service establishment and mailing a copy to the permit holder's last known address.

(a) There shall be a rebuttable presumption that a permit holder is unwilling or unable to comply if he or she refuses to allow the Health Authority to enter upon and inspect the premises of the food service establishment at any reasonable time and in a reasonable manner, or if any particular violation is found to be uncorrected upon the third consecutive inspection.

(b) Except as specified in DPH Rule 511-6-1-.03(2)(n), a permit may be summarily suspended upon the discovery of an imminent health hazard. The permit holder may seek immediate review of a summary suspension by written request to the District Health Director. The matter shall be heard by the District Health Director, or a supervisory level employee designated by the District Health Director who was not personally involved in the inspection, acting as a review official. The Health Authority shall make every effort to arrange a hearing within 72 hours of the request. The hearing shall be conducted informally and without application of the rules of evidence. Both the inspector and the permit holder shall be given an opportunity to present any arguments or evidence in support of their positions. The review official may uphold the summary suspension, or may modify or lift the suspension on such conditions as may be appropriate.

(c) In lieu of suspension or revocation of a permit, the Health Authority may in its discretion allow a food service establishment to voluntarily close all or part of the premises until such time as violations are corrected, and upon such additional restrictions as the Health Authority may deem appropriate.

(d) The permit holder may appeal any suspension or revocation to the Department in accordance with O.C.G.A. Section 31-5-3 by sending written notice within ten days, by certified mail or statutory overnight delivery, addressed to the Department of Public Health, Office of General Counsel, with a copy to the Health Authority official that suspended or revoked the permit. Within ten days of receiving the notice, the Health Authority shall provide the Department with a copy of its entire file on the inspections and actions that led to the suspension or revocation. The Department shall schedule a hearing within 20 days of receiving the notice, and shall decide the matter upon the arguments of the parties and the administrative record.

(e) If operations of a food service establishment are discontinued due to the order or action of the Health Authority, the permit holder shall obtain approval from the Health Authority before resuming operations.

(f) The Health Authority may, in its discretion, allow the owner to voluntarily close all or part of the food service establishment in lieu of suspending or revoking a permit. Such action will not prohibit the Health Authority from taking such further action as it may deem necessary to protect employees or members of the public.

(g) If at any time a mobile food service establishment's permit is no longer in good standing in any jurisdiction, a county may revoke the establishment's authorization to operate in its jurisdiction.

(2) Inspections.

(a) Risk Categorization. Inspections of a food service establishment shall be conducted based on risk categorization. The risk type shall be determined by the

menu items served, the food preparation processes performed, and the previous food safety history in the food service establishment. Each establishment shall be grouped in one of the following categories:

1. Risk Type I. Frequency of inspection will be one time per year for establishments that do not cook any foods. This includes establishments that may reheat commercially precooked ingredients or foods such as hotdogs and sausages;

2. Risk Type II. Frequency of inspection will be two times per year for establishments that cook and/or hold and reheat foods that are prepared onsite; or

3. Risk Type III. Frequency of inspection will be three times per year for establishments that have a required HACCP plan that is deemed in conformance with DPH Rule 511-6-1-.02(8). One of these inspections will be a scheduled inspection to meet with the Certified Food Safety Manager.

(b) Inspection Frequency.

1. The Health Authority shall conduct one or more construction inspections for newly constructed or extensively remodeled establishments to verify that the food service establishment is constructed and equipped in accordance with the approved plans and specifications, and is in compliance with law and this Chapter. In addition, the Health Authority may conduct one or more preoperational inspections to verify compliance with the construction and equipment requirements of this Chapter at the time of a change in the permit holder of an existing food service establishment.

2. An initial inspection will be conducted in an establishment prior to the food permit being issued.

3. To allow the permit holder of the food service establishment sufficient time to fully train employees as specified in of DPH Rule 511-6-1-.03(3)(d)1 and 2, the first routine inspection will be conducted within sixty days after the opening of the establishment; and, it will mark the beginning of the establishment's compliance history with this Chapter.

4. After the first routine inspection, establishments maintaining an "A" food safety grade shall be inspected based on the risk categorization specified in subsection (2)(a)1. through 3. of this Rule.

5. Establishments that receive a "C" or "U" food safety grade will have at least one additional routine inspection added in a twelve month period, and may have more inspections at the discretion of the Health Authority.

6. If an establishment maintains an "A" food safety rating on three consecutive routine inspections, then the Health Authority may, in its discretion, reduce the frequency of routine inspections to one time per year for Risk Type II establishments and to two times per year for Risk Type III establishments.

7. The reduced inspection frequency may continue until the food service establishment incurs a grade of a "B","C" or "U". The routine inspection frequency will then resume to the number specified for Risk Type, but may be more frequent as deemed necessary for the enforcement of this Chapter by the Health Authority.

(c) Follow-up Inspections. Follow-up inspections may be conducted at anytime at the discretion of the Health Authority, but must be conducted within ten days after an establishment receives a grade "U".

(d) Access.

1. Representatives of the Health Authority, after proper identification, shall be permitted to enter any food service establishment or operation at any reasonable time for the purpose of making inspections and review of pertinent records to determine compliance with this Chapter. Should access be denied, an inspection warrant may be obtained as authorized in O.C.G.A. §31-5, Article 2.

2. If a person denies access to the Health Authority, the Health Authority shall:

(i) Inform the person that:

(I) The permit holder is required to allow access to the Health Authority,

(II) Access is a condition of the acceptance and retention of a food service establishment permit to operate, and

(III) If access is denied, an inspection warrant, issued by the appropriate authority to order access, may be obtained according to law; and

(ii) Make a final request for access.

(e) Inspection of Mobile Food Service Units. The local Health Authority in the county of origin and the local Health Authority in additional counties in which the mobile food service unit operates shall exchange information regarding their inspection of mobile food service establishments. When inspecting a mobile food service unit in a county other than the county of origin, the local Health Authority shall consult

the DPH permit and inspection database to find out the violations received during the last inspection of the base of operation. These violations will be noted as violations during the inspection of each mobile food service unit.

(f) Inspection of Mobile Food Service Units outside of the county of origin.

1. The mobile food service establishment may be subject to periodic and unannounced inspections in any outside county where its permit has been recognized. County boards of health shall utilize discretion when inspecting mobile food service establishments that have been authorized to operate in multiple jurisdictions to ensure they are not inspected more frequently than necessary to protect public health and safety. A mobile food service establishment shall allow the county board of health access for inspection when the mobile food service establishment is physically operating in such county.

2. Fees for inspections conducted in outside counties shall be paid in full by the next business day. Failure to pay for inspections in outside counties will result in termination of authorization to operate in that county. The inspection fee shall be limited to the administrative costs incurred by the county to complete the inspection.

3. If any such inspection results in a violation, any outside county shall notify the county of origin and any other counties where the mobile food service establishment is authorized to operate of the violation. Any county where the mobile food service establishment operates may issue a court citation, terminate authorization for the mobile food service establishment to operate in the county, or require implementation of a remediation plan for the violation.

4. A mobile food service establishment shall stay current with its annual inspection fees in its county of origin and shall provide any outside counties where it is authorized to operate proof of currency before operating in that county.

(g) Report of Inspection.

1. The Health Authority shall document on the Department's current approved "Food Service Establishment Inspection Report" form and "Food Service Inspection Report Addendum" form(s):

   (i) Administrative information about the food service establishment's legal owner, street and mailing addresses, type of establishment and operation, inspection date, and other information which may include such information as type of water supply and sewage disposal, status of the permit, and personnel certificates that may be required;

(ii) Specific factual observations of violations or other deviations from this Chapter that require correction by the permit holder including:

(I) Failure of the person in charge to demonstrate the knowledge of foodborne illness prevention, application of HACCP principles, and the requirements of this Chapter as specified under DPH Rule 511-6-1-.03(1)(a) through (c),

(II) Failure of food employees, conditional employees, and the person in charge to report a disease or medical condition as specified under DPH Rule 511-6-1-.03(4)(b),

(III) Nonconformance with Priority items and priority foundation items of this Chapter,

(IV) Failure of the appropriate food employees to comply with or demonstrate their knowledge of the procedural, monitoring, verification, and corrective action practices required by the Health Authority for a variance or HACCP Plan,

(V) Failure of the person in charge to provide records required by the Health Authority for determining conformance with a HACCP plan as specified under DPH Rule 511-6-1-.02(8),

(VI) Nonconformance with critical limits of a HACCP plan; and

(iii) The numerical score and equivalent grade, based on debiting the appropriate points for violations and repeat violations of code provisions found or observed during the inspection.

2. Upon the completion of the inspection, the evaluating official shall have the person in charge sign the inspection report form. The person in charge's signature shall not necessarily indicate agreement with the findings noted on the inspection.

(h) Violation Categories.

1. Violations of this Chapter are categorized according to their potential for creating a health risk to the consumer. All violations shall be recorded on the current inspection report and addendum(s). Violations are divided into two categories, Risk Factors/Public Health Interventions (RF/PHI) Categories and Good Retail Practices (GRP) Categories. In addition and for purposes of prioritization of corrective action, items in these categories are

designated as priority items, priority foundation items, or core items as defined in DPH Rule 511-6-1-.01.

2. Violation of Risk Factors/Public Health Interventions (RF/PHI) categories are prominent on the inspection report because they are vital to preventing foodborne illness. These items are numbered 1 to 9 on the inspection report and divided into Subcategory "1" and "2" as follows:

   (i) Subcategory "1" items cover provisions of the code, that when applied would directly prevent, eliminate or reduce hazards to a safe level to protect consumer health. Because the probability of occurrence and severity of a hazard is greater when these provisions are out of compliance, the incidence and impact of foodborne illness is increased and therefore a point value is assigned for a violation of any subcategory "1" item of nine points, and

   (ii) Subcategory "2" items cover provisions of the code, that when applied, would indirectly prevent, eliminate or reduce hazards to a safe level to protect consumer health. Because the probability of occurrence and severity of a hazard is lower than subcategory "1" when these provisions are out of compliance, the incidence and impact of foodborne illness is not as great and therefore a point value is assigned for a violation of any subcategory "2" item of four points.

3. Risk Factors and Public Health Interventions (RF/PHI) Categories include:

   (i) Supervision.

   (ii) Employee health, good hygienic practices, preventing contamination by hands.

   (iii) Approved source.

   (iv) Protection from contamination.

   (v) Cooking of time/temperature control for safety foods, consumer advisory.

   (vi) Holding and date-marking of time/temperature control for safety foods.

   (vii) Highly susceptible populations.

   (viii) Chemicals.

(ix) Conformance with approved procedures.

4. Good Retail Practices (GRP) categories are deemed to be mostly operational and maintenance violations that, if not corrected, increase the potential for causing food borne illness. They are usually designated as core items; however, some may be designated as priority foundation items as defined within DPH Rule 511-6-1-.01. A violation of an item in a GRP category constitutes a one to three point deduction from the overall score (maximum 100 points) as shown on the current food services establishment inspection report form.

5. Good Retail Practices Categories (GRP) include

   (i) Safe food and water, food identification.

   (ii) Food temperature control.

   (iii) Pest and animal control.

   (iv) Prevention of food contamination.

   (v) Proper use of utensils.

   (vi) Utensils, equipment and vending.

   (vii) Water, plumbing and waste.

   (viii) Physical facilities.

   (ix) Other.

(i) Timely Correction of Violations of Priority Item or Priority Foundation Item and HACCP Plans.

1. Except as specified in paragraph 2 of this subsection, a person in charge shall at the time of inspection correct a violation of a priority item or a priority foundation item of this Chapter and implement corrective actions for a HACCP plan provision that is not in compliance with its critical limit.[PF]

2. Based on the nature of the potential hazard involved and the complexity of the corrective action needed, the Health Authority may agree to or specify a longer time frame, not to exceed:

   (i) 72 hours after the inspection, for the permit holder to correct violations of a priority item; or

(ii) 10 calendar days after the inspection, for the permit holder to correct violations of a priority foundation item or HACCP Plan deviations.

3. Failure to correct these violations to the satisfaction of the Health Authority may result in such emergency action as deemed necessary by the Health Authority including legal actions pursuant to O.C.G.A. § 31-5-9(a).

(j) Time Frame for Correction of Core Item Violations.

1. Except as specified in paragraph 2 of this subsection, the permit holder shall correct core items within 72 hours of the food service establishment's receipt of the inspection report or as otherwise directed by the Health Authority. Failure to make timely corrections to the satisfaction of the Health Authority of core items may subject the food service establishment to suspension or revocation of its permit pursuant to DPH Rule 511-6-1-.10(1).

2. The Health Authority may approve a compliance schedule that extends beyond the time limits specified under paragraph 1 of this subsection if a written schedule of compliance is submitted by the permit holder and no health hazard exists or will result from allowing an extended schedule for compliance.

(k) Verification and Documentation of Correction.

1. After observing at the time of inspection a correction of a violation of a priority item or priority foundation item or HACCP plan deviation, the Health Authority shall enter the violation and information about the corrective action on the inspection report.

2. As specified under subsection (2)(h)(2) of this Rule, after receiving notification that the permit holder has corrected a violation of a priority item or priority foundation item or HACCP plan deviation, or at the end of the specified period of time, the Health Authority shall verify correction of the violation, document the information on an inspection report or addendum, and enter the report in the Health Authority's records.

(l) Grading Inspections. Inspections will receive a letter grade based on the numerical score as follows:

1. "A". The letter grade "A" means food safety excellence and is applied to a score of 90 to 100.

2. "B". The letter grade "B" means satisfactory compliance and is applied to a score of 80 to 89.

3. "C". The letter grade "C" means marginal compliance and is applied to a score of 70 to 79.

4. "U". The letter grade "U" means unsatisfactory compliance and is applied to a score of 69 or less.

(m) Repeat Violations. A repeat violation means a violation of the same code provision of this Chapter under an item in a Risk Factors/Public Health Interventions (RF/PHI), or Good Retail practices (GRP) category as documented in the previous routine inspection. A repeat violation constitutes the initial point deduction as specified in subsection (2)(g)2 and 4 of this Rule plus an additional two point deduction for one or more repeat violation(s) within a RF/PHI category and one point deduction in a GRP category from the overall score (maximum 100 points). If a violation of the same provision of this Chapter is found in three consecutive routine inspections, then the points will be deducted accordingly and the food service establishment may be subject to suspension or revocation of its permit pursuant to subsection (1)(b) of this Rule.

(n) Follow-up Inspections.

1. A follow-up inspection is a complete inspection conducted as a result of a routine inspection which resulted in a "C" or "U" grade. If a grade of "C" or higher is earned on the follow-up inspection, then at the discretion of the Health Authority no additional follow-up inspections will be required, however, all priority items and all priority foundation items must be corrected as specified under subsection (2)(h) 1 through 3 of this Rule.

2. The new score and equivalent grade will be posted on an inspection report during a follow-up inspection. The two previous inspection grades and scores, whether routine or follow-up inspections, will be posted subsequently under "Last Grade, Score and Date" and "Prior Grade, Score and Date" on the inspection report.

(o) Informal Follow-up Inspection. If a follow-up inspection as specified in subsection (2)(m) of this Rule cannot be conducted by the Health Authority, then an informal follow-up may be performed to confirm correction of the violations that were cited on the routine inspection that were not corrected at the time of the inspection. On an informal follow-up inspection, an inspection report addendum(s) will be completed, documenting the violations that have been corrected. It will be noted on the addendum(s) that this was an informal follow-up inspection, and the establishment will keep the same grade that was earned on the previous routine inspection. The addendum(s) will be made available by the food service establishment to the public upon request.

(p) Voluntary Closure.

1. If a food service establishment is graded as a "U" and does not earn at least a grade "C" within ten days of receiving the "U", it may be requested to voluntarily close until all violations are corrected or have its food service permit suspended or revoked according to subsection (1)(b) of this Rule.

2. A food service establishment that is graded as a "U" on two consecutive routine inspections will be asked to voluntarily close until all violations are corrected and/or have enforcement action taken to suspend or revoke the food service permit pursuant to subsection (1)(b) of this Rule

(3) Examination, Condemnation and Public Notice.

(a) Examination of Food. Food may be examined or sampled by the Health Authority when necessary to determine whether it has been adulterated or misbranded.

(b) Condemnation of Food, Hold Order, Justifying Conditions and Removal of Food.

1. The Health Authority may, upon written notice to the owner or person in charge, place a hold order on any food that the Health Authority has probable cause to believe to be unwholesome; originating from an unapproved source; unsafe, adulterated, or not honestly presented; not labeled according to law, or, if raw molluscan shellfish, not tagged or labeled according to law; or otherwise not in compliance with this Chapter. Under a hold order, food shall be moved to a suitable holding area for storage until a hold order release or destruction order is issued. No food subject to a hold order shall be used, served, or removed from the establishment except as specified in paragraph 2 of this subsection. Immediate destruction shall be ordered and accomplished if there is risk to public health.

2. If the Health Authority has reasonable cause to believe that the hold order will be violated, or finds that the order is violated, the Health Authority may remove the food that is subject to the order to a place of safekeeping.

3. The hold order notice shall:

(i) State that food subject to the order may not be used, sold, moved from the food service establishment, or destroyed without a written release of the order from the Health Authority;

(ii) State the specific reasons for placing the food under the hold order with reference to the applicable provisions of this Chapter and the hazard or adverse effect created by the observed condition;

(iii) Completely identify the food subject to the hold order by the common name, the label information, a container description, the quantity, Health Authority's tag or identification information, and location;

(iv) State that the Health Authority may order the destruction of the food if a timely request for reconsideration is not received; and

(v) Provide the name and address of the Health Authority representative to whom a request for reconsideration may be made.

4. If a hold order is sustained upon reconsideration, or if no timely request for reconsideration is made by the permit holder, then the Health Authority may order the permit holder or other person who owns or has custody of the food to bring the food into compliance with this Chapter or to destroy or denature the food under the Health Authority's supervision.

(4) Procedure When Infection is Suspected.

(a) Investigation and Control. The Health Authority shall act when it has reasonable cause to believe that a food employee or conditional employee has possibly transmitted disease; may be infected with a disease in a communicable form that is transmissible through food; may be a carrier of infectious agents that cause a disease that is transmissible through food; or is affected with a boil, an infected wound, or acute respiratory infection, by:

1. Securing a confidential medical history of the food employee or conditional employee suspected of transmitting disease or making other investigations as deemed appropriate; and

2. Requiring appropriate medical examinations, including collection of specimens for laboratory analysis, of a suspected food employee or conditional employee.

(b) Restriction or Exclusion of Food Employee, or Summary Suspension of Permit. Based on the findings of an investigation related to a food employee or conditional employee who is suspected of being infected or diseased, the Health Authority may issue an order to the suspected food employee, conditional employee or permit holder instituting one or more of the following control measures:

1. Restricting the food employee or conditional employee;

2. Excluding the food employee or conditional employee; or

3. Closing the food service establishment by summarily suspending a permit to operate.

(5) Variance.

(a) Modifications and Waivers. The Department may grant a variance by modifying or waiving the requirements of this Chapter if in the opinion of the Department a health hazard or nuisance will not result from the variance. If a variance is granted, the Department shall retain the information specified under subsection 5(b) of this Rule in its records for the food service establishment.

(b) Documentation of Proposed Variance and Justification. Before a variance from a requirement of this Chapter is granted by the Department, the information that shall be provided by the person requesting the variance and retained in the Department's file on the food service establishment includes:

1. A statement of the proposed variance of the Chapter requirement citing relevant rule and subsection numbers;[Pf]

2. An analysis of the rationale for how the potential public health hazards and nuisances addressed by the relevant rules and subsections will be alternatively addressed by the proposal;[Pf] and

3. A HACCP plan if required that includes the information specified under DPH Rule 511-6-1-.02(8) as it is relevant to the variance requested.[Pf]

(c) Conformance with Approved Procedures. If the Department grants a variance as specified in subsection (5)(a) of this Rule, or a HACCP plan is otherwise required as specified under DPH Rule 511-6-1-.02(7), the permit holder shall:

1. Comply with the HACCP plans and procedures that are submitted and deemed in conformance with DPH Rule 511-6-1-.02(8)(a) through (e) as a basis for the modification or waiver;[P] and

2. Maintain and provide to the Department, upon request, records specified under DPH Rule 511-6-1-.02(8) that demonstrate that the following are routinely employed;

(i) Procedures for monitoring the critical control points,[Pf]

(ii) Monitoring of the critical control points,[Pf]

(iii) Verification of the effectiveness of the operation or process,[Pf] and

(iv) Necessary corrective actions if there is failure at a critical control point.[Pf]

Cite as Ga. Comp. R. & Regs. R. 511-6-1-.10
Authority: O.C.G.A. §§ 26-2-373, 379, 31-2A-6.
History. Original Rule entitled "Inspections and Compliance Procedures" adopted. F. Oct. 9, 2015; eff. Oct. 29, 2015.
Amended: F. Jan. 25, 2023; eff. Feb. 24, 2023, as specified by the Agency.

Subject 511-6-2. TOURIST ACCOMMODATIONS.

Rule 511-6-2-.01. Legal Authority.

These rules are adopted pursuant to the Official Code of Georgia Annotated §§ 31-2A-6 and 31-28-1*et seq.*

Cite as Ga. Comp. R. & Regs. R. 511-6-2-.01
Authority: O.C.G.A. §§ 31-2A-6 and 31-28-5.
History. Original Rule entitled "Legal Authority" adopted. F. Jul. 16, 2013; eff. Jan. 1, 2014, as specified by the Agency.

Rule 511-6-2-.02. Title and Purpose.

These rules shall be known as the Rules and Regulations for Tourist Accommodations. The purpose of these rules is to emphasize the minimum standards necessary for tourist accommodations to provide essential services, facilities, and sanitary conditions in order to protect the public health and safety.

Cite as Ga. Comp. R. & Regs. R. 511-6-2-.02
Authority: O.C.G.A. §§ 31-2A-6 and 31-28-5.
History. Original Rule entitled "Title and Purpose" adopted. F. Jul. 16, 2013; eff. Jan. 1, 2014, as specified by the Agency.

Rule 511-6-2-.03. Definitions.

The following definitions shall apply in the interpretation and enforcement of these rules:

(a) "Approved" means acceptable to the Health Authority based on a determination of conformity with principles, practices, and generally recognized standards that protect public health.

(b) "Bed and Breakfast Inn" means an establishment of twenty guestrooms or less, which serves food only to its registered tourists, and serves only a breakfast or similar early morning meal and an appropriate light snack in which the price of the food is included in the price of the overnight accommodation. For purposes of the rules,"Bed and Breakfast Inn" refers to an establishment in which the predominant relationship between the

occupants thereof and the owner or operator of the establishment is that of innkeeper and tourist."

(c) "Consumer" means in terms of relationship with a tourist accommodation, a transient person who becomes a guest of a tourist accommodation and is a member of the public, takes possession of food, receives lodging and services for a fee, is not functioning in the capacity of an operator of a tourist accommodation establishment and does not offer the food for resale.

(d) "Continental breakfast" is defined as and may include (1) any non-potentially hazardous food (non-time/temperature control for safety food) which has been prepared commercially by a food processing plant that meets requirements of law and is served to the consumer out of the original container in which it was purchased or if approved by the Health Authority, it may be served out of a commercial, self-service dispenser if such dispensers are properly designed to protect contained food from the consumer; (2) non-potentially hazardous beverages such as coffee and hot tea served in the container in which it was prepared; (3) potentially hazardous foods (time/temperature control for safety foods) such as milk, cream, butter and cheese prepared by a food processing plant that meets requirements of law only if served in single serving commercially packaged original containers; (4) juices and condiments including jams, jellies, sugar, salt and pepper served in single serving commercially packaged original containers or juices may be served from a bulk mechanical dispenser, if appropriate warewashing is available; (5) non-ready-to-eat whole, uncut, raw fruits, such as bananas, grape fruit, or oranges that require peeling of rind by the consumer before consumption; and (6) ready-to-eat, whole, raw, uncut fruits such as apples and/or grapes where the peel is consumed along with the meat of the fruit. Any additional items, other than those listed, will require a food service permit in accordance with the Department's rules and regulations governing food service establishments Chapter 511-5-14 or any future subsequent Chapters adopted thereafter.

(e) "County Board of Health" means the County Board of Health established pursuant to O.C.G.A. Section 31-3-1.

(f) "Critical item" means a provision of this Chapter as delineated on the inspection report that, if violated, is more likely than other violations to contribute to food contamination, insanitary conditions, illness or environmental health hazard and may create an imminent health hazard.

(g) "Department" or "DPH" means the Department of Public Health (DPH).

(h) "Dependent trailer" means a trailer or recreational vehicle (RV) which is dependent upon a service building housing shower/ toilet facilities.

(i) "Detached cabin" means, for the purpose of installing and operating a portable spa on the premises, a separate dwelling having no wall in common with another dwelling or building. The cabin as part of a tourist accommodation shall be rented as an entire unit, not by individual rooms.

(j) "Employee" means any person engaged in the operation of a tourist accommodation whether compensated or not.

(k) "Food" means a raw, cooked, or processed edible substance, ice, beverage, or ingredient used or intended in whole or in part for human consumption, or chewing gum.

(l) "Food-contact surface" means a surface of equipment or a utensil with which food normally comes into contact or a surface of equipment or a utensil from which food may drain, drip, or splash into a food or onto a surface normally in contact with food.

(m) "Food processing plant" means a commercial operation that manufactures, packages, labels, or stores food, and provides food for sale or distribution to other business entities such as food processing plants, retail food sales, or food service establishments.

(n) "Food service" means a facility that shall comply with provisions of O.C.G.A. Chapter 26-2 Art. 13 and the rules, regulations and standards adopted thereunder.

(o) "Health Authority" means the County Board of Health if functioning in the administration and enforcement of O.C.G.A. Chapter 31-28 and the rules, regulations and standards adopted thereunder by the Department and subject to supervision and direction by the Department; and if not so functioning, the Department.

(p) "Housekeeper's cart" means a cart which is used to transport cleaning materials, room supplies, clean and soiled linens and refuse.

(q) "Hydromassage bathtub" means a permanently installed bathtub fixture designed to be filled with each use and equipped with a recirculation piping system, a pump and associated controls. It is designed so it can accept, circulate and discharge water upon each use. It does not contain a disinfection or filtration system.

(r) "Imminent health hazard" means a product, practice, circumstance, event or condition that requires immediate correction or cessation of operation in order to prevent a significant threat of danger or death, injury or illness.

(s) "Independent trailer" means a trailer or recreational vehicle (RV) which has a holding tank for waste and/or can be connected directly to a sewer connection.

(t) "Law" means applicable local, state, and federal statutes, regulations, and ordinances.

(u) "Lodging" means a temporary sleeping accommodation, with or without independent kitchenettes, offered to tourists, travelers or guests travelling from one place to another, stopping overnight or otherwise in need of a temporary place to stay.

(v) "Non-ready-to-eat fruit" means whole uncut, raw fruit, such as oranges, grapefruit, and bananas in which the peel must be removed by the consumer before the meat of the fruit is consumed.

(w) "Non-permanent structure" means any structures such as buildings, tents, park trailers or cabins that can be removed from the premise of a tourist accommodation and they are not restrained from removal by foundation or utilities, without internal plumbing, dependent upon central shower/toilet buildings for tourist personal hygiene and sanitation purposes, and are maintained, offered, or used for dwelling or sleeping quarters.

(x) "Operator" means the person who has the duty and responsibility of overall management of the tourist accommodation which includes maintaining a sanitary facility, providing guest services and training employees, or his/her representative, or person in charge.

(y) "Packaged" means bottled, canned, cartoned, securely bagged or securely wrapped, as packaged in a food processing plant. It does not include a wrapper, carry-out box or other nondurable container used to containerize food with the purpose of facilitating food protection during service and receipt of the food by the consumer.

(z) "Park trailer" means a recreation vehicle primarily designed as temporary living quarters for recreation, camping or seasonal use, built on a single chassis, mounted on wheels, with a gross trailer area not exceeding 400 square feet in the set-up mode, and certified by the manufacturer as complying with ANSI A119.5.

(aa) "Permit" means the DPH document issued by the Health Authority that authorizes a person to operate a Tourist Accommodation and signifies satisfactory compliance with this Chapter.

(bb) "Person" means any individual, partnership, corporation, or association.

(cc) "Person in charge" means the individual present in a tourist accommodation establishment who is the owner, supervisor, manager or owner's designated representative of the tourist accommodation establishment present at the time of the inspection. The person shall be knowledgeable of the responsibilities in the chapter and have access to facilities on the premises.

(dd) "Portable spa unit" means a factory fabricated unit consisting of a water holding vessel with all water-circulating, filtration, heating and control equipment integral to the unit. Equipment can include pumps, air blowers, heaters, lights, controls and disinfection and filtration systems. These portable spas are intended for residential use.

(ee) "Potentially hazardous food (time/temperature control for safety food)" means a food that requires time/temperature control for safety to limit pathogenic microorganism growth or toxin formation. Refer to Rule .01 within the Department's rules and regulations governing food service establishments Chapter 511-5-14 or future subsequent Chapters adopted thereafter.

(ff) "Premises" means and includes all physical buildings, appurtenances, parking lots, drive ways and all property used by the tourist accommodation.

(gg) "Primitive campsite" means a site in an undeveloped section of private or public land with no developed facilities or amenities such as water, electricity or toilets/shower facilities, where campers are expected to leave little or no evidence of human visitation.

(hh) "Preparation of food" means to put together or make by combining ingredients and processing food for consumption by the consumer.

(ii) "Ready-to-eat food" means food that is in a form that is edible without additional preparation to achieve food safety. It includes the following:

1. All potentially hazardous food (time/temperature control for safety food) that is cooked to the temperature and time required for the specific food;

2. Raw fruits and vegetables that are washed;

3. Fruits and vegetables that are cooked for hot holding;

4. Plant food for which further washing, cooking, or other processing is not required for food safety, and from which rinds, peels, husks, or shells, if naturally present have been removed;

5. Substances derived from plants such as spices, seasonings, and sugar;

6. A bakery item such as bread, cakes, pies, fillings, or icing for which further cooking is not required for food safety;

7. The following products that are produced in accordance with USDA guidelines and that have received a lethality treatment for pathogens: dry, fermented sausages, such as dry salami or pepperoni; salt-cured meat and poultry products, such as prosciutto ham, country cured ham, and Parma ham; and dried meat and poultry products, such as jerky or beef sticks; and

8. Foods manufactured as specified in 21 CFR Part 113, Thermally Processed Low-Acid Foods Packaged in Hermetically Sealed Containers.

(jj) "Ready-to-eat fruit" means whole raw, uncut, fruits, such as apples and/or grapes, that have been washed prior to service and the meat and the peel is normally consumed by guest.

(kk) "Recreational vehicle (RV)" means a vehicle designated for temporary living quarters for camping, travelling, or recreational use. It may have its own motor, or be mounted on or pulled by another vehicle.

(ll) "**Recreational vehicle park or campground**" means a n accommodation for recreational vehicles or other camping outfits where an individual site is rented, and the intent of the park or campground is not to establish permanent residences.

(mm) "Residential kitchen" means a kitchen within a bed and breakfast inn used for the owners' private use as well as preparation of a breakfast meal for tourists.

(nn) "Restricted use pesticide" means a pesticide product that contains the active ingredients specified in 40 CFR 152.175 (Pesticides classified for restricted use), and that is limited to use by or under the direct supervision of a certified applicator.

(oo) "Sanitization" means the application of cumulative heat or chemicals on cleaned food contact surfaces that, when evaluated for efficacy, is sufficient to yield a reduction of 5 logs, which is equal to a 99.999% reduction, of representative disease microorganisms of public health importance.

(pp) "Sealed" means free of cracks or other openings that allow the entry or passage of moisture.

(qq) "Sewage" means liquid waste containing animal or vegetable matter in suspension or solution and may include liquids containing chemicals in solution.

(rr) "Single-service articles" means tableware, carry-out utensils, cups, containers, lids or closures, plates, napkins, doilies, bags, containers, toothpicks, knives, forks, spoons, stirrers, paddles, straws, wrapping materials, and similar utensils that are intended to be discarded after one use.

(ss) "Single-serving" is food intended to be eaten by one person in one sitting and commercially packaged in a container intended to be discarded after one use.

(tt) "Smooth" means a surface that has no roughness or projections that render it difficult to clean or maintain in a sanitary condition.

(uu) "Tourist Accommodation" means any facility consisting of two or more rooms or dwelling units providing lodging and other accommodations to the general public, such as tourist courts, tourist cottages, tourist homes, trailer parks, trailer courts, motels, motor hotels, hotels, and any similar place by whatever name called and any food, beverage, laundry, recreational or other facilities or establishments operated in conjunction therewith. This definition includes any facility consisting of two or more rooms or dwelling units either joined together or separate on a common piece of property, furnished for pay and further includes campgrounds, recreational vehicle parks and bed and breakfast inns. A tourist accommodation is not a facility intended for permanent residence, or a facility available only to members of a club or through private lease or invitation.

(vv) "Tourist","Traveler," or "Guest" is defined as anyone who visits a Tourist Accommodation for the purpose of lodging, meals, or entertainment.

(ww) "Trailer" means any trailer coach, recreational vehicle (RV), park trailer or other similar unit designed for temporary dwelling or sleeping purposes.

(xx) "Trailer space" means a plot of ground within a trailer and/or recreational vehicle park designated for the accommodation of one trailer or recreational vehicle (RV).

(yy) "Utensil" means a food-contact implement or container used in the storage, preparation, transportation, dispensing, sale, or service of food, such as kitchenware or tableware that is multiuse, single-service, or single-use; gloves used in contact with food; temperature sensing probes of food temperature measuring devices; and probe-type price or identification tags used in contact with food.

(zz) "Warewashing" means the cleaning and sanitizing of utensils and food-contact surfaces of or equipment.

Cite as Ga. Comp. R. & Regs. R. 511-6-2-.03
Authority: O.C.G.A. §§ 31-2A-6 and 31-28-5.
History. Original Rule entitled "Definitions" adopted. F. Jul. 16, 2013; eff. Jan. 1, 2014, as specified by the Agency.

Rule 511-6-2-.04. Tourist Accommodation Permits.

(1) Permit:

(a) Any person operating a tourist accommodation shall obtain and display a valid DPH tourist accommodation permit issued by the Health Authority.

(b) To qualify for a permit, an applicant shall:

1. Be an owner of the tourist accommodation;

2. Allow access to the tourist accommodation;

3. Provide all information as required on the application and pay all applicable local and state fees referenced in DPH Rule 511-6-2-.22 at the time the application is submitted and;

4. Score 100% on the permitting inspection for newly constructed facilities.

(c) Prior to the issuance of a tourist accommodation permit to new or existing establishments, the applicant shall provide evidence of satisfactory compliance with the provisions of this Chapter and all other provisions of laws that apply to the location, construction and maintenance of tourist accommodation establishments and the safety of persons therein. At the request of the Health Authority, a permit holder of a tourist accommodation may be requested to show evidence of continued compliance with provisions of law that apply to the location, construction and maintenance of tourist accommodations and the safety of persons therein.

(d) Application for a permit to operate such tourist accommodation shall be made in duplicate upon forms provided by the Department. Such forms shall be completed in all details and signed by the applicant or authorized agent and submitted at least ten days before the scheduled opening. The original shall be filed with the Health Authority.

(e) Upon receipt of an application for permit the Health Authority shall review the application and shall take action to approve or deny the permit as is provided in accordance with the provisions of O.C.G.A. Chapter 31-28 and these regulations.

(f) The Health Authority shall grant the permit or write a statement detailing the reasons for denial. The permit or statement shall be forwarded to the tourist accommodation operator.

(g) Permits shall expire upon change of ownership, location, or change in type of operation. A "change of ownership" means the transfer of a 50% interest or greater in the Tourist Accommodation to a person or entity not holding a current interest. In addition, once a Tourist Accommodation permit has been issued by the Health Authority, any significant or material change of the Tourist Accommodation's physical layout that would alter the interior or exterior structural blueprint of the facility may invalidate the permit. Unless prior approval has been obtained from the Health Authority, the facility shall maintain the physical layout shown within the approved plans and specifications of the Tourist Accommodation at the time of permit issuance. Operators shall notify the Health Authority before any structural, material or equipment changes to obtain approval if necessary.

(h) The permit shall be void when the tourist accommodation ceases to operate or moves to another location. The operator shall be responsible for notifying the Health Authority when the Tourist Accommodation ceases to operate and for removing the invalid permit from the facility.

(2) Plans and Specifications. Plans and specifications for remodeling tourist accommodations and construction of new tourist accommodations must be submitted for review and approval fourteen days prior to beginning construction. The plans shall indicate the proposed layout and arrangement of rooms in the establishment and what each is to be used for. Mechanical and plumbing details must be shown as well as construction materials to be used on floors, walls and ceilings. Additional plans for a kitchen will be required if food is to be prepared and served to guests. The plans shall indicate the proposed menu or list of foods to be served, floor plan layout, arrangement of equipment, HVAC and plumbing, construction materials and finish schedule, the type and model of proposed fixed equipment and facilities and the anticipated service volume per day. If swimming pools or spas are planned, properly prepared plans and specifications must be submitted to the local Health Authority for review, approval, and issuance of a construction permit as per applicable rules and regulations governing public swimming

pools. If no construction changes are to be made to an existing building, requirement for plans will be at the discretion of the Health Authority.

(3) Private Camps. Camps or facilities owned and operated for members only may be inspected at the Health Authority's discretion or upon request by the owner or operator or by complaint.

(4) Primitive Campsites. These campsites shall be inspected only at the discretion of the Health Authority.

Cite as Ga. Comp. R. & Regs. R. 511-6-2-.04
Authority: O.C.G.A. §§ 31-2A-6 and 31-28-5.
History. Original Rule entitled "Tourist Accommodation Permits" adopted. F. Jul. 16, 2013; eff. Jan. 1, 2014, as specified by the Agency.

Rule 511-6-2-.05. Inspections.

(1) Tourist accommodations shall be subject to inspection at reasonable hours no less than twice annually and as often as is deemed necessary by the Health Authority to ensure adequate compliance with the provisions of these rules. The permit holder is responsible for providing a person or persons at the time of inspection who are authorized and able to provide access to all rooms, facilities and records of the tourist accommodation, and who can demonstrate that there is sufficient daily oversight of employees and routine monitoring of operations to ensure the following:

(a) Employees adhere to standard procedures or rules in the chapter when performing essential services such as linen exchange, sanitizing facilities or multiuse utensils, washing laundry, housekeeping and providing food in compliance for tourists, travelers and guest lodging or visiting the facility for other purposes;

(b) Employees are preventing cross-contamination of clean linen, towels or glassware in transport or storage by separating items, using designated containers and properly storing items after cleaning and sanitizing;

(c) Employees are preventing cross-contamination of ready-to-eat food with bare hands by properly using suitable utensils such as deli tissue, spatulas, tongs, single-use gloves, or dispensing equipment;

(d) Employees are properly cleaning and sanitizing multiuse utensils by monitoring temperature and exposure time for hot water sanitizing or chemical concentration, pH and temperature for chemical sanitizing;

(e) Employees of a bed and breakfast inn are properly cooking potentially hazardous food (time/temperature control for safety food), being particularly careful in cooking those foods known to cause severe foodborne illness and death, such as

eggs and comminuted meats and conduct routine monitoring of the cooking temperatures using appropriate temperature measuring devices properly scaled and calibrated;

(f) Employees are using proper methods to hold potentially hazardous foods (time/temperature control for safety food) hot or cold for consumption;

(g) Employees are informed of their responsibility to report to the person in charge, information about their health and activities as they relate to diseases that are transmissible through food; and contact with multiuse utensils and;

(h) If an imminent health hazard exists, misuse of poisonous or toxic materials, onset of an apparent illness or outbreak, gross insanitary condition, or other circumstances that may endanger public health, then operations in the affected area shall be immediately discontinued by the person in charge and the Health Authority notified.

(2) The operator may accompany the Health Authority representative on tours of inspection, shall be given the opportunity to sign the completed inspection report and retain a copy for the tourist accommodation's file.

(3) The signature of the operator shall not mean his agreement with all of the findings recorded thereon, but only that he or she has received the report and the notification of alleged non-compliances with the rules.

(4) The results of the inspection shall be recorded on a form provided by the Department. This report will show violations found, corrective actions necessary for compliance with this rule, date of inspection, signature of person performing the inspection and the date when corrections to violations must be completed. If three or more critical item violations are found and recorded on a tourist accommodation inspection report form, then a re-inspection will be required within 60 days. Critical violations shall be corrected immediately, within 24 hours, or the Health Authority shall be authorized to close or restrict access to any area of the premises found in violation of critical item(s) on the official inspection record. Such areas shall be closed until the violations have been corrected or abated as determined by the Health Authority using the requirements in Rule .20.

(5) The operator shall correct other violations at time of inspection, if warranted, or within 30 days of the inspection report date. The Health Authority may extend the 30 days if an operator requires additional time to remove a violation based on a written plan of correction.

(6) The report shall be discussed and explained at the time of inspection with the tourist accommodation operator or if not present, the designated person in charge.

(7) The most recent tourist accommodation inspection report form shall be prominently displayed in public view at all times, between five feet and seven feet from the floor and in a public area such as the registration desk, where it can be read at a distance of one foot away.

(8) Any tourist accommodation inspection report addendum(s), completed by the Health Authority to document observations, violations, and corrective actions resulting from an inspection need not be displayed, but must be made available by the tourist accommodation operator to the public upon request.

(9) The Health Authority shall review all reports on reinsertion and shall institute such action as is deemed necessary to ensure compliance with the provisions of O.C.G.A. Chapter 31-28.

Cite as Ga. Comp. R. & Regs. R. 511-6-2-.05
Authority: O.C.G.A. §§ 31-2A-6 and 31-28-5.
History. Original Rule entitled "Inspections" adopted. F. Jul. 16, 2013; eff. Jan. 1, 2014, as specified by the Agency.

Rule 511-6-2-.06. Employee Health and Safety.

(1) No person affected with any disease in a communicable form, boils, infected wounds, or sores, or while a carrier of a communicable disease shall work in any area of a tourist accommodation in any capacity in which there is a likelihood of such a person contaminating bedding and other surfaces with pathogenic organisms or transmitting disease to other individuals and no person known or suspected of being affected with any such disease or condition shall be employed in such an area or capacity. When there is reason to suspect that an employee has contracted any disease in communicable form or has become a carrier of such a disease, the employee shall be removed from the tourist accommodation premises; or his or her service is restricted to some area of the establishment where there would be no danger of transmitting disease.

(2) Employees, other than clerical employees, shall thoroughly wash their hands and the exposed portions of their arms with soap and warm water before starting work, during work as often as necessary to keep them clean and after smoking, eating, drinking or using the toilet. Employees shall keep their fingernails clean. Employees shall maintain a high degree of personal cleanliness and conform to other good hygienic practices.

Cite as Ga. Comp. R. & Regs. R. 511-6-2-.06
Authority: O.C.G.A. §§ 31-2A-6 and 31-28-5.
History. Original Rule entitled "Employee Health and Safety" adopted. F. Jul. 16, 2013; eff. Jan. 1, 2014, as specified by the Agency.

Rule 511-6-2-.07. Water Supply and Sanitizing.

(1) The water supply shall comply with all Federal, State and local laws and/or ordinances related to safe drinking water. The following shall apply as well:

(a) A public water system must be used by any tourist accommodation that regularly serves an average of twenty-five trailer spaces or guestrooms daily for at least sixty days out of the year. This applies to such places as hotels, motels, trailer parks or cottages.

(b) A nonpublic water system serving less than twenty-five trailer spaces or guestrooms, must be constructed, maintained, and operated according to applicable state and local codes and procedures, as amended.

(2) Cold running water under pressure shall be provided to all equipment that uses water. Hot and cold running water under pressure shall be provided to all lavatories, bathing facilities, laundry facilities, and water-using equipment where eating and drinking utensils are washed. In all new tourist accommodations, and where possible in existing tourist accommodations, hot water in all guest rooms shall not exceed 120°F.

(3) The water supply shall be protected so as to preclude the possibility of back siphonage. Below grade stop and wastes cocks or hose bibs shall not be used.

(4) Hoses used for filling trailer water tanks shall be stored under sanitary conditions, used for no other purposes, and handled so that back siphonage cannot occur and contaminants will not be introduced into the trailer's water tank. A hose connected to a potable water service outlet that is intended for human consumption must not be long enough to reach any wastewater dump station.

(5) Water glasses, ice buckets and other multi-use utensils provided for tourist's use in a guestroom or dwelling unit shall be washed, rinsed, and sanitized, in a 3-compartment, warewashing sink dedicated for that purpose only. They shall be thoroughly cleaned in the first compartment in a warm soapy solution; rinsed clean of soap and debris in warm clean water in the second compartment; and sanitized as specified in subsection (5) (d) 1, 2, 3, 4, and 5 using chemical sanitizers or sanitized by hot water as specified in subsection (5) (e), after each occupancy and as needed during occupancy. Where approved sanitizing methods are not provided, single service and single use articles, such as paper or plastic cups shall be made available in lieu of glasses and shall be discarded after one use. In lieu of sanitizing ice buckets, a sanitary, food grade, plastic bag, large enough to line the bucket and overlap the top edge may be provided for use by a single occupant.

(a) In addition to a dedicated 3-compartment warewashing sink, a commercial warewasher may be utilized if certified by ANSI/NSF as meeting standard 3 or equivalent for commercial warewashing equipment and it is maintained in good repair and operating according to its manufacturer's specifications.

(b) If a warewasher is provided in the room of the tourist accommodation, or if the operators provide a non-commercial warewasher (i.e. dishwasher) to clean and

sanitize multi-use equipment and utensils between room occupancies, then the machine must comply with the following:

1. The warewasher must be able to remove all physical soil from all surfaces of dishes and;

2. Be equipped with a high temperature rinse cycle such as a sani-cycle and all cycles on the machine must be used (prewash, wash, sanitizing rinse) and be certified by NSF standards or;

3. If no high temperature rinse cycle is provided, the hot water supplied to the machine must be at a minimum of 155º F (68º C). The operator shall use a maximum registering thermometer or a heat thermal label to assure that the sanitizing rinse water temperature is a minimum of 155ºF (68ºC). The operator must record quarterly each warewasher temperature reading for review at the discretion of the Health Authority.

(c) The warewasher must be installed and operated according to manufacturer's instructions for the highest level of sanitization possible when sanitizing kitchen facilities' utensils and tableware. A copy of the instructions must be available on the premises at all times.

(d) A chemical sanitizer used in a sanitizing solution for a manual or mechanical operation at exposure times specified under this subsection shall meet the requirements specified in 40 CFR 180.940 Tolerance exemptions for active and inert ingredients for use in antimicrobial formulations (food-contact surface sanitizing solutions), shall be used in accordance with the Environmental Protection Agency (EPA)-approved manufacturer's label use instructions, and shall be used as follows:

1. A chlorine solution shall have a minimum temperature based on the concentration and pH of the solution as listed in the following chart;

Minimum Concentration	Minimum Temperature	
mg/L	pH 10 or less ºC (ºF)	pH 8 or less ºC (ºF)
25	49 (120)	49 (120)
50	38 (100)	24 (75)
100	13 (55)	13 (55)

2. An iodine solution shall have a minimum temperature of 75ºF (24ºC), minimum concentration between 12.5 ppm and 25 ppm, and pH of 5.0 or less or a pH no higher than the level for which the manufacturer specifies for the solution to be effective;

3. A quaternary ammonium compound solution shall have a minimum temperature of 75ºF (24ºC), have a concentration as specified in 40 CFR 180.940 Tolerance exemptions for active and inert ingredients for use in antimicrobial formulations and as indicated by the manufacturer's use directions included in the labeling, and be used only in water with 500 ppm hardness or less or in water having a hardness no greater than specified by the manufacturer's label;

4. If another solution of a chemical specified under 1 - 3 of this subsection is used, the permit holder shall demonstrate to the Health Authority that the solution achieves sanitization and the use of the solution shall be approved; or

5. If a chemical sanitizer other than chlorine, iodine, or a quaternary ammonium compound is used; it shall be applied in accordance with the manufacturer's use directions included in the labeling.

6. The operator shall provide a test kit or device that measures the sanitizing agent's concentration in the solution. Each time a user replaces the solution; they shall measure the concentration of the sanitizer in parts per million.

(e) Hot water may be used to sanitize glasses, ice buckets and other multi-use utensils in a 3-compartmented, warewashing sink, after they have been thoroughly cleaned in the first compartment in a warm soapy solution; and then rinsed clean of soap and debris in clean warm water in the second compartment. These items will then be immersed for at least 30 seconds in water at a temperature of 171°F (77°C) or above and then air-dried before use and/or storage.

(6) Single- service items placed in a guestroom or dwelling units shall be commercially pre-wrapped to protect against contamination. Water glasses shall be inverted on a clean surface or covered with a single-service lid and other multi-use utensils shall be protected from contamination in a manner approved by the Health Authority. Equipment, utensils, dishes, etc. in kitchenettes provided for guest use shall be kept clean and sanitized between each tourist's occupancy. If kitchenettes are provided for tourist use, then dishwashing detergent shall be made available for tourist use.

(7) Drinking founts shall be constructed of impervious material and shall have an angle-jet nozzle above the overflow rim of the bowl. The nozzle shall be protected by a non-oxidizing guard and the bowl shall be constructed of an easily cleanable material.

(8) If self-service ice is provided, then it shall be from an approved water supply. In all new tourist accommodations, and in existing tourist accommodations when machines are replaced, only automatic dispensing ice machines will be allowed. In existing tourist accommodations permitted prior to the adoption of this rule, the use of existing self-service ice-storage bins may be continued, provided that the machines are maintained in

good repair and capable of being properly cleaned and sanitized according to the manufacturer's recommendations. Further, a copy of the manufacturer's cleaning instructions shall be maintained onsite for review at the request of the Health Authority. Scoops, ice buckets, and other ice handling equipment, shall be of easily cleanable material and construction. They shall be stored in a clean place and shall be kept clean. Glassware shall not be used to scoop ice.

Cite as Ga. Comp. R. & Regs. R. 511-6-2-.07
Authority: O.C.G.A. §§ 31-2A-6 and 31-28-5.
History. Original Rule entitled "Water Supply and Sanitizing" adopted. F. Jul. 16, 2013; eff. Jan. 1, 2014, as specified by the Agency.

Rule 511-6-2-.08. Toilet Facilities.

(1) Toilet, lavatory, and bathing facilities shall be provided at all tourist accommodations except as provided in paragraphs (13) and (16) of this Rule. Such facilities shall be easily accessible, convenient and available to patrons at all times.

(2) Bedrooms in permanent structures shall be provided with private or connecting baths. Central toilet facilities may be used to serve bed and breakfast inns and existing multi-storied tourist accommodations; so long as, toilet facilities are within the building, located on each floor, and deemed adequate by determination of the Health Authority to serve the tourists therein.

(3) Bedrooms in non-permanent structures such as cabins, park trailers, or structures in a wilderness settings used to provide lodging shall be provided with access to central toilet/shower building.

(4) Toilet rooms and fixtures must be smooth and nonabsorbent and shall be kept clean and in good repair. Walls, floors, and ceilings shall be constructed of easily cleanable nonabsorbent materials and shall be kept clean and in good repair. While being used by tourists, every surface of a bathtub, shower, shower enclosure, toilet and lavatory, which may come in contact with a person's body, must be sanitized each day, unless the guest has declined regular tourist room services. If a tourist declines regular tourist room services, the tourist accommodation facility must ensure that these surfaces are cleaned and sanitized at least once per week and between tourists.

(5) Toilet, lavatory and bathing facilities shall be mechanically ventilated. Where ventilation ducts are used, ducts from toilet rooms shall not be connected into return ventilation ducts to any other room. In existing tourist accommodations permitted prior to the adoption of this rule, the current ventilation must prevent odor, mold, mildew, and moisture. All new or major renovation of a tourist accommodation will require mechanical ventilation to be installed to the outside of the building separate from heating and air-condition systems.

(6) Toilet rooms, lavatories and bathing facilities shall be provided with soap, artificial light, and hot and cold water under pressure.

(7) Unused, individually wrapped soap or liquid soap dispensed from approved containers shall be provided in guest rooms. Soap furnished in public wash rooms or baths shall be dispensed from approved containers designed to preclude contamination of the contents by individual contact.

(8) Clean laundered individual towels shall be provided for each occupant in tourist rooms. Used or soiled towels shall be exchanged with clean towels and laundered between each occupancy and at the request of the customer. If fabric bath mats are provided, they shall be laundered or cleaned after each occupancy. Towels, whenever provided in public wash rooms or baths, shall be individual towels and if cloth shall have been laundered since last used.

(9) Toilet tissue shall be provided in a dispenser at each toilet at all times.

(10) Anti-slip tubs slip strips, appliqués, or slip-proof mats shall be provided in each bathing facility and shall be kept clean and in good repair.

(11) When used, hydromassage bathtubs shall be installed in accordance with the applicable codes. The recirculation piping system for a hydromassage bathtub shall be cleaned in accordance with the manufacturer instructions. Further, the manufacturer's cleaning instructions shall be available on-site for examination at the request of the Health Authority. Fresh potable water must be provided with each use.

(12) Where dependent trailers are located, central toilet/shower buildings shall be provided and sized to meet the expected guest load based upon the number of trailer spaces or fraction thereof.

(13) If the independent trailer sites are served by sewer connections, then it is not necessary for independent trailer sites to have access to central toilet/shower buildings. However, if such facilities are not provided, a sign with at least 2-inch high lettering shall be posted at the main entrance to the establishment notifying dependent trailer owners that central toilet/shower facilities are not available.

(14) Central Toilet/Shower Buildings shall meet at least the following minimum requirements:

(a) They shall be provided with separations for each sex with no interconnection. All rooms and parts of the central toilet/shower building shall be well-lighted, drained, ventilated to control odor, mold and mildew and of good construction with impervious materials. They shall be developed and planned in consultation with the Health Authority and designed so that good sanitation can be maintained throughout the building at all times. Every surface of a bathtub, shower, shower enclosure, toilet and lavatory which may come in contact with a person's body must be sanitized each day.

(b) Handicapped accessible toilet, shower, and lavatory facilities shall be designed and provided in accordance with state or local requirements and can be included as part of the required total number of water closets, shower heads, lavatories, etc.

(c) Central toilet/shower building shall be plainly identified with signage of at least 2-inch high lettering and located within 200 feet of dwelling units or trailer spaces served.

(d) When serving dependent trailers, central toilet/shower buildings shall be provided for each ten trailer spaces or fraction thereof with not less than one commode, one lavatory and one tub or shower head for each sex. In addition, at least one urinal shall be provided in each central toilet designated for men.

(e) When serving non-permanent structures, a central toilet/shower building shall be provided for each ten non-permanent structure, or fraction thereof, with not less than one commode, one lavatory and one tub or shower head for each sex. In addition, at least one urinal shall be provided in each central toilet designated for men.

(f) If partitions are provided between portions of the dressing room area, screen partitions, shower, toilet, and dressing room booths shall be of durable material not subject to damage by water and shall be designed so that a waterway is provided between partitions and floor to permit thorough cleaning of the walls and floor areas with hoses, mops and brooms.

(g) Hot and cold water under pressure shall be provided at all lavatories and showers.

(h) Floors of central toilet/shower buildings shall be free of joints or openings and shall be continuous throughout the areas. Floors shall have a slip-resistant, nonabsorbent surface that shall be relatively smooth to ensure thorough cleaning. In all newly constructed, remodeled or renovated facilities, floor drains shall be provided and floors shall be sloped not less than one-eight inch (1/8") per foot toward the drains to ensure positive drainage.

(i) In all newly constructed, remodeled or renovated facilities, an adequate number of three-fourths inch (3/4") hose bibbs shall be provided for flushing down the central toilet facility interior.

(j) Soap dispensers for providing either liquid or powdered soap shall be provided at each lavatory. Shampoo dispensers for shampoo shall be provided for each shower head. These dispensers shall be of all metal or plastic type with no glass. They shall dispense their contents in such a manner that precludes contamination of the contents by individual contact.

(k) At least one paper towel dispenser or hand blow dryer shall be provided for every three lavatories.

(l) An unbreakable mirror shall be provided over each lavatory.

(m) Toilet paper holders shall be provided at each water closet.

(n) Soap, paper towels, and toilet tissue shall be provided in all dispensers.

(o) Fixtures shall be installed in accordance with local plumbing codes and shall be properly protected against back-siphonage.

(p) Fixtures shall be designed so that they may be readily and frequently cleaned and disinfected. Frequent cleaning and disinfecting shall not cause damage.

(q) At least one trash receptacle will be available in toilet areas.

(15) In all newly constructed, remodeled or renovated facilities, at least one service sink or one curbed cleaning facility equipped with a floor drain shall be provided and shall be conveniently located for the cleaning of mops or similar wet floor cleaning tools and for the disposal of mop water and similar liquid waste. Service sinks or curbed cleaning facilities may be located in central toilet/shower buildings servicing non-permanent structures or dependent trailer parks.

(16) Remote, primitive, or wilderness campsites may not be required to provide toilet facilities at the discretion of the Health Authority. If toilet facilities are not provided, then a sign shall be posted at the main entrance notifying campers of what facilities are or are not available.

Cite as Ga. Comp. R. & Regs. R. 511-6-2-.08
Authority: O.C.G.A. §§ 31-2A-6 and 31-28-5.
History. Original Rule entitled "Toilet Facilities"s adopted. F. Jul. 16, 2013; eff. Jan. 1, 2014, as specified by the Agency.

Rule 511-6-2-.09. Sewers.

(1) Sewers shall be designed in accordance with recognized engineering practices for the estimated sewage flow and shall be laid with watertight joints to a grade that will ensure a self-cleaning velocity. Sewers shall be constructed of durable materials properly vented and shall be installed at sufficient depth to withstand anticipated loads or other equally suitable means for protection of the pipe shall be used.

(2) Each independent trailer space shall be provided with a sewer connection not less than three inches in diameter. The design of these sewer connections shall be such that a

watertight junction will be made with the trailer outlet. Each sewer connection shall be so constructed that it can be closed and when not in use shall be capped to prevent escape of odors.

(3) Facilities with independent trailer spaces may use a properly sized dump station for sewage disposal with a properly sized central toilet/shower building built in accordance with DPH Rule .08(5),(12),(14)and(15).

(4) Dump stations' connection to sewage disposal shall be as according to DPH Rule .10 of this Chapter.

(5) Minimum design and specifications for dump stations shall be as follows:

(a) Each dump station shall be equipped with a concrete pad surrounding the drain. The concrete pad shall meet all of the following requirements: (See Drawing #1)

1. It shall be a minimum of six feet by six feet in size;

2. It shall be a minimum of six inches in thickness;

3. It shall have a drain opening which is at least four inches in diameter with a foot-operated, self-closing cap which forms a tight seal with the drain. The drain opening shall be located outside of the wheel travel portion of the pad, and a minimum of 2 feet from any edge of the pad and curbing;

4. It shall have minimum four-inch tall curbing bordering the non-wheel travel area of the pad;

5. All surface drainage must be diverted around and away from pad;

6. The surface of the pad shall slope at least .25 inch per foot from the edge to the drain;

7. Four-inch piping shall run from the drain to either an on-site sewage management system or to a public sanitary sewer system;

8. All plumbing must be in compliance with applicable state and local plumbing codes;

9. A water supply outlet for wash down shall be provided with a water source that is protected from backflow and back-siphonage, and with a retractable spring coiled water delivery device or other system approved by the Health Authority. Hoses used for flushing the dump station pad shall not exceed the length necessary to reach the entire pad; and 10. Drain must include ability to receive wash down water from the pad.

(b) Each dump station shall be easily accessible to the entrance and exit area of the tourist accommodation and have safe, all weather access roadway that slopes away from the dump station pad.

(c) Each dump station shall be properly sealed to prevent nuisances.

(d) Each dump station shall be posted with signs that are clearly and indelibly labeled stating instructions for use with minimum one inch tall lettering. These signs must be at least 2 feet from pad. The signs shall include the statement in at least 1-inch high lettering, "Georgia law prohibits dumping sewage from recreational vehicles, camper trailers, and other holding tanks onto the ground. The water supply at this location is to be used for flushing and cleaning purposes only, and not for human consumption."

(e) Each dump station shall be maintained in a clean and functional manner by the tourist accommodation operator.

(f) Existing facilities with dump stations not in compliance with the design criteria in this Rule shall bring their dump station into compliance with the requirements of subsection (5) of this Rule when the station is repaired or renovated, or upon change of ownership. This exception does not exclude any requirement to maintain the dump station to prevent a public health nuisance or hazard.

(6) Each dump station shall have an available water supply for the flushing of dump station areas and the following shall apply: (See Drawing #2)

(a) Each dump station shall be constructed and operated so as to protect the water supply and all other water outlets within the tourist accommodation from contamination due to backflow in accordance with DPH Rule 511-6-2-.11.

(b) Any hose or sprayer must be long enough to allow for a person to operate the drain opening while spraying the pad area.

(c) The washing water supply towers, connections, hoses and other parts must be colored red. Under no circumstances shall the tourist accommodation operator allow a hose that is long enough to reach a water outlet that is used for human consumption to be connected to a water service outlet at a dump station.

(d) Each dump station shall be located such that any water source or service outlet used for filling water tanks or other uses for human consumption is at least fifty feet away from the dump station facility.

Drawing #1

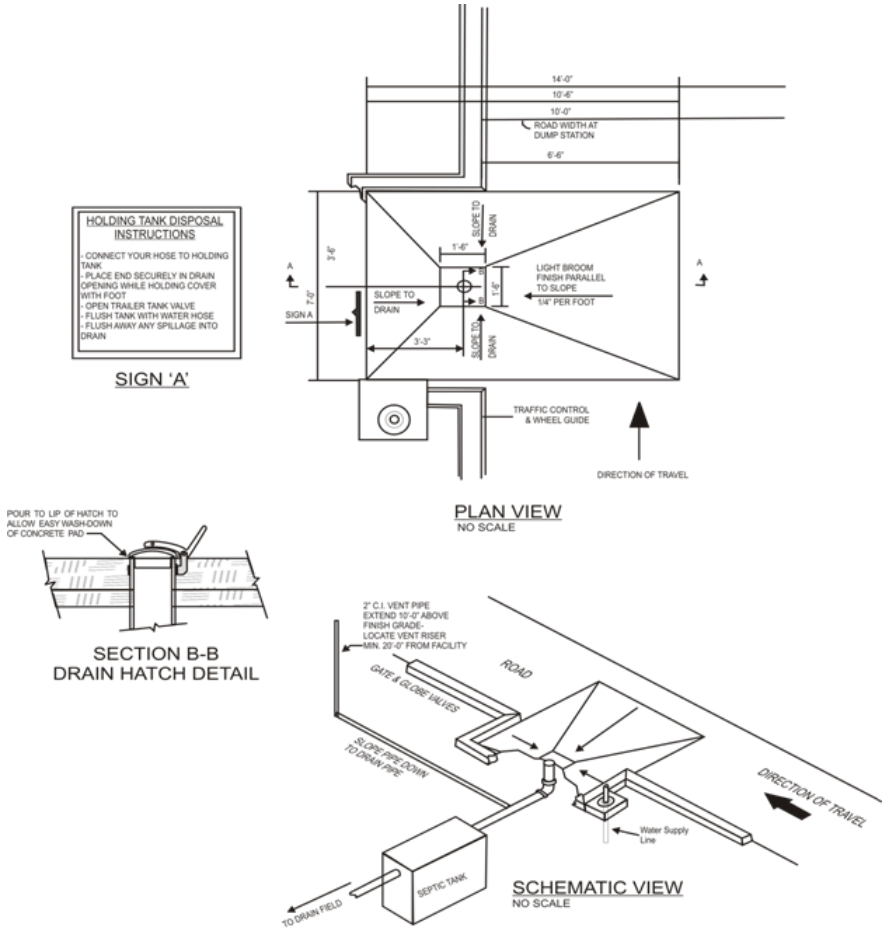
HOLDING TANK DISPOSAL INSTRUCTIONS
- CONNECT YOUR HOSE TO HOLDING TANK
- PLACE END SECURELY IN DRAIN OPENING WHILE HOLDING COVER WITH FOOT
- OPEN TRAILER TANK VALVE
- FLUSH TANK WITH WATER HOSE
- FLUSH AWAY ANY SPILLAGE INTO DRAIN
SIGN 'A'
14'-0"
10'-6"
10'-0"
ROAD WIDTH AT DUMP STATION
6'-6"
SLOPE TO DRAIN
1'-6"
3'-6"
7'-0"
SLOPE TO DRAIN
SIGN A
LIGHT BROOM FINISH PARALLEL TO SLOPE
1/4" PER FOOT
1'-6"
3'-3"
SLOPE TO DRAIN
TRAFFIC CONTROL & WHEEL GUIDE
DIRECTION OF TRAVEL
PLAN VIEW
NO SCALE
POUR TO LIP OF HATCH TO ALLOW EASY WASH-DOWN OF CONCRETE PAD
SECTION B-B
DRAIN HATCH DETAIL
2" C.I. VENT PIPE EXTEND 10'-0" ABOVE FINISH GRADE- LOCATE VENT RISER MIN. 20'-0" FROM FACILITY
ROAD
GATE & GLOBE VALVES
SLOPE PIPE DOWN TO DRAIN PIPE
DIRECTION OF TRAVEL
Water Supply Line
SEPTIC TANK
TO DRAIN FIELD
SCHEMATIC VIEW
NO SCALE

Drawing #2

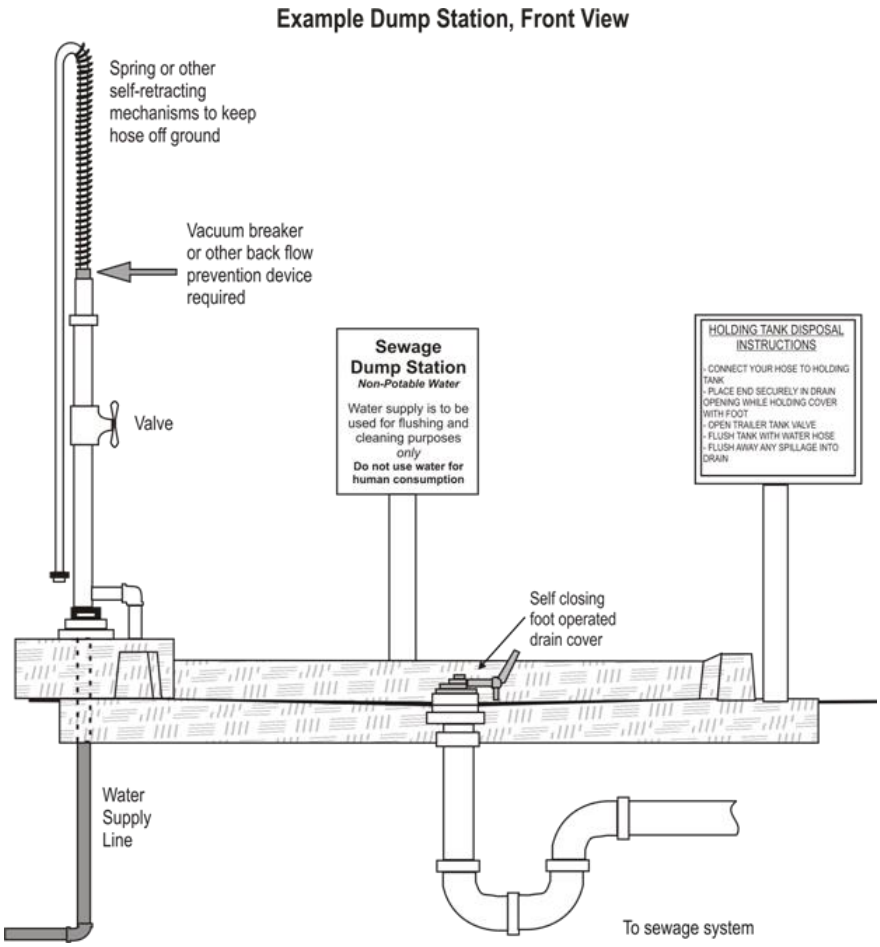

Note: Waste piping will be not less than 4 inches in diameter unless specified by applicable law.

Cite as Ga. Comp. R. & Regs. R. 511-6-2-.09
Authority: O.C.G.A. §§ 31-2A-6 and 31-28-5
History. Original Rule entitled "Sewers" adopted. F. Jul. 16, 2013; eff. Jan. 1, 2014, as specified by the Agency.

Rule 511-6-2-.10. Sewage Disposal.

(1) Connection shall be made to a public or community sewage treatment system when such system is available within two hundred feet of the property line, or available in a public right-of-way abutting the property.

(2) Where public sewers are not available, as determined by the local governing agency, sewage disposal shall be provided to effectively dispose of all water carried wastes in a sanitary manner. No sewage, waste water, or other liquid effluent shall be discharged in such manner as to enter surface or subsurface water except following a treatment process

approved prior to construction in conformity with existing State and local laws or by other means approved by the Health Authority. Such sewage disposal systems shall be constructed and maintained in a manner to prevent the creation of unsanitary conditions. The Health Authority may approve existing private sewage disposal systems giving satisfactory service.

(3) When central toilet/shower buildings are provided on the premises of a tourist accommodation, a dump station must be installed and sized based on the total number and type of trailer sites to be served and projected sewage flow, and all in accordance with local codes.

Cite as Ga. Comp. R. & Regs. R. 511-6-2-.10
Authority: O.C.G.A. §§ 31-2A-6 and 31-28-5.
History. Original Rule entitled "Sewage Disposal" adopted. F. Jul. 16, 2013; eff. Jan. 1, 2014, as specified by the Agency.

Rule 511-6-2-.11. Plumbing.

All plumbing in tourist accommodations shall comply with State and local laws, ordinances or regulations. In the absence of State and local laws, ordinances or regulations, the provisions of the current "International Plumbing Code with Georgia Amendments or future subsequent versions adopted thereafter shall prevail.

Cite as Ga. Comp. R. & Regs. R. 511-6-2-.11
Authority: O.C.G.A. §§ 31-2A-6 and 31-28-5.
History. Original Rule entitled "Plumbing" adopted. F. Jul. 16, 2013; eff. Jan. 1, 2014, as specified by the Agency.

Rule 511-6-2-.12. Garbage and Refuse Disposal.

(1) At least one Health Authority approved indoor container for waste shall be provided for each indoor dwelling unit to be rented. Containers shall be constructed of durable metal or other materials which do not leak, do not absorb liquids and do not support combustion. Such containers shall be thoroughly cleaned on the inside and outside each time they are emptied unless liners are used.

(2) All outside refuse or garbage storage containers shall be constructed of durable metal or other approved types of materials, which do not leak and do not absorb liquids and shall be provided with tight-fitting lids or covers and shall be kept covered when stored. Each container shall be located within 100 feet of dwelling units or trailer spaces or in a location approved by the Health Authority and shall be cleaned at such frequency as to prevent a nuisance or odor.

(3) Adequate cleaning facilities shall be provided and each garbage or recycling storage room, enclosure, or container shall be thoroughly cleaned after the emptying or removal

of refuse or garbage. Areas surrounding these rooms, enclosures, and containers shall be kept clean and orderly. Liquid waste resulting from the cleaning of containers shall be disposed of as sewage.

(4) Except for garbage facilities associated with Camp Grounds and Bed & Breakfast Inns, for all newly constructed, remodeled, or renovated establishments, refuse and garbage storage containers must be stored on a properly constructed sealed concrete slab or machine laid sealed asphalt. However, the Health Authority may require storage containers to be on similar properly constructed storage facilities for Camp Grounds and Bed & Breakfast Inns should insanitary conditions warrant such facilities.

(5) Refuse shall be collected in accordance with municipal practices where available. Where such services are not available the tourist accommodation shall dispose of the refuse in compliance with all Federal, State, local laws and or ordinances.

Cite as Ga. Comp. R. & Regs. R. 511-6-2-.12
Authority: O.C.G.A. §§ 31-2A-6 and 31-28-5.
History. Original Rule entitled "Garbage and Refuse Disposal" adopted. F. Jul. 16, 2013; eff. Jan. 1, 2014, as specified by the Agency.

Rule 511-6-2-.13. Insect and Rodent Control.

(1) Effective and appropriate measures shall be taken to eliminate the presence of rodents and flies, roaches, bed bugs, and other insects on the premises. The premises shall be kept in such condition as to prevent the attraction, harborage or feeding of insects or rodents. Restricted use pesticides, as specified in 40 CFR 152 Subpart I - Classification of Pesticides shall be applied only by a licensed professional. All pesticide applications must be in accordance with current state and federal laws and the product label. Applying pesticides within buildings using area fog dispersal methods or as warranted under DPH Rule -.20(4)(c) is restricted to licensed pest control professionals as part of an integrated pest management program.

(2) A record must be maintained on file and available at request of Health Authority for no less than 18 months of any pesticide use on the premises, except for the occasional use of consumer insect sprays on small spots in accordance with the product label. The record may be made by the permit holder or provided by the applicator, and shall list the following information:

(a) amount and concentration of product used;

(b) name of product used;

(c) date and location of application;

(d) application method;

(e) pest targeted; and

(f) name of applicator.

(3) Openings to the outside shall be effectively protected against the entrance of rodents and insects by tight-fitting doors, closed windows, screening, controlled air currents or other means. Screen doors shall be self-closing and screens for windows, doors, skylights, transoms and other openings to the outside shall be tight-fitting and free of breaks. Screening materials shall not be less than sixteen mesh to the inch. Screen doors for sliding patio doors will not be required to be self closing except in food service, preparation and utensil washing areas of permitted food service establishment kitchens and bed and breakfast inns.

Cite as Ga. Comp. R. & Regs. R. 511-6-2-.13
Authority: O.C.G.A. §§ 31-2A-6 and 31-28-5.
History. Original Rule entitled "Insect and Rodent Control" adopted. F. Jul. 16, 2013; eff. Jan. 1, 2014, as specified by the Agency.

Rule 511-6-2-.14. Construction, Layout and Furnishings.

(1) Floors, walls, ceilings. windows, doors and all other appurtenances shall be of sound construction, properly maintained in good repair and shall be kept clean. In all new constructed and extensively remodeled residential kitchens used in bed and breakfast inns, coved base molding may be required. Walls and ceilings in residential kitchens shall be easily cleanable and light colored.

(2) Cooking is only allowed within tourist rooms that have been constructed to include permanently installed cooking facilities as approved by the Health Authority and other applicable state and local authorities. This rule does not prohibit coffee makers and microwave ovens belonging to the tourist accommodation.

(3) Ventilation shall be provided for all rooms. Where ventilation is provided by means of windows, they shall open directly to the outside air and the openable window area of each room shall be not less than 1/20 of the floor area served. Where ventilation is provided by other means, it shall comply with the requirements of the current International Mechanical Code with Georgia Amendments or future subsequent revisions adopted thereafter to provide comfortable living conditions, remove objectionable odor and fumes, and prevent excessive condensation. Ventilation systems shall comply with applicable State and local fire prevention requirements and building codes.

(4) All rooms shall be well lighted. When natural light fails to provide sufficient illumination, evenly distributed artificial light shall be provided to maintain a lighting intensity of not less than ten foot candles at 30" above the floor.

(5) All furniture, draperies, appliances, carpets, and other accessories, in the tourist accommodation, whether the property of the tourist accommodation owner or not, shall be considered the property of and furnished by the tourist accommodation for purposes of enforcement of this Chapter, and must be maintained in good repair, clean, and free of vermin.

(6) Washable mattress pads or covers shall be used on all mattresses. Beds, mattresses, springs, slats, mattress pads, mattress and bed coverings, pillow and pillow covers shall be clean and free from vermin. Each bed shall be provided, as a minimum, with two sheets and one pillow and pillowcase. After each occupancy and upon the request of the occupant, sheets and pillowcases shall be changed with fresh laundered linens. During occupancy, linens shall be changed at a minimum frequency of not less than weekly.

(7) Sleeping quarters must be separated by a wall from the food preparation, food storage, and food service areas of a bed and breakfast inn.

Cite as Ga. Comp. R. & Regs. R. 511-6-2-.14
Authority: O.C.G.A. §§ 31-2A-6 and 31-28-5.
History. Original Rule entitled "Construction, Layout and Furnishings" adopted. F. Jul. 16, 2013; eff. Jan. 1, 2014, as specified by the Agency.

Rule 511-6-2-.15. Heating and Fire Safety.

(1) All heating appliances shall be designed and installed to carry all flue gases to the outside of building through the flue outlet.

(2) Unvented combustion type heaters shall not be installed and/or used on the premises, unless they are in compliance with current State of Georgia fire safety codes and installed in accordance with the manufacturer's recommendations.

(3) All automatic natural gas heating equipment shall be equipped with automatic safety pilot. All liquefied petroleum gas burning appliances shall be equipped with 100% safety cut-off pilot.

(4) Gas water heaters shall not be installed in bathrooms or bedrooms, or in closets connected thereto.

(5) All gas-fired equipment shall be inspected at least annually by a qualified licensed contractor or local fire authority, if available. Points to be inspected are proper construction and installation, malfunctions and adjustments of controls and burners, faulty heat exchangers and vent obstructions. Any defects found on inspection must be corrected by a qualified heating contractor prior to use of the equipment. Upon request, the operator shall provide evidence of inspection and/or correction of any deficiency.

Cite as Ga. Comp. R. & Regs. R. 511-6-2-.15
Authority: O.C.G.A. §§ 31-2A-6 and 31-28-5.
History. Original Rule entitled "Heating and Fire Safety" adopted. F. Jul. 16, 2013; eff. Jan. 1, 2014, as specified by the Agency.

Rule 511-6-2-.16. Swimming Pools.

(1) Regulations of the Department and/ county in which govern the design, construction, operation and maintenance of swimming pools or spas shall apply to pools and spas operated in conjunction with a tourist accommodation.

(2) If a swimming pool or spa at a bed and breakfast inn cannot comply with applicable regulations, then it must be enclosed with a fence at least four feet in height with a locked gate and used only by family members. In such case, guests shall not be allowed to use swimming pool or spa.

(3) If a portable spa unit is installed and operated on the premises of a detached cabin used for lodging as part of a tourist accommodation and if the owner complies with (4) and (5) of this Rule, then the portable spa will be exempt from (1) of this Rule. The owner must submit appropriate documentation for review and receive written approval from the hhhh Health Authority before operation.

(4) Installation:

(a) All portable units shall be for individual use by the occupants only and shall be permanently installed outside of the cabin and on the premises of the individual dwelling unit.

(b) If the portable unit is installed in an outside enclosure, then adequate mechanical exhaust ventilation shall be provided to minimize heat and steam accumulation.

(c) The portable unit shall be constructed of a hard non-absorbent material such as fiberglass, acrylic or ceramic tile and provide a slip resistant walking surface. PVC or vinyl-liner materials shall not be used.

(d) Portable units shall be installed in compliance with applicable electrical and plumbing codes.

(e) Portable units shall be installed in accordance with the manufacturer's instructions and applicable wastewater disposal codes.

(f) Portable units shall be equipped to avoid suction entrapment by providing suction outlets with covers that have been tested and approved by a nationally recognized testing laboratory and shall comply with ANSI/ASME A112.19.8-2007, Suction Fittings For Use in Swimming Pools, Wading Pools, Spas and Hot Tubs, or most recent edition.

(5) Operation:

(a) Portable units operated as a chamber shall be drained, cleaned, sanitized and refilled prior to the next use.

(b) The unit shall be filled with potable water from an approved source immediately prior to use. The water fill line shall be protected with an approved backflow prevention device.

(c) A thermometer shall be provided to ensure that the water temperature does not exceed 104° F. A sign shall be posted adjacent to the unit stating,"Max. Temp. 104° F." and list manufacturer's precautions on use.

(d) The unit shall be completely drained immediately after each use. A drain shall be located at the lowest part of the unit and all plumbing components shall be self-draining. All waste water shall be disposed of in a manner approved by the Health Authority. Wastewater may be discharged into a sanitary sewer through an approved air gap or into an approved subsurface disposal system or by other means approved by the Health Authority.

(e) The operator must provide the guest with the procedures and warnings on spa usage. The spa must remain empty until the tourist request spa services.

(f) Hours of spa services must be defined by the operator.

(g) Written procedures for cleaning and sanitizing shall be provided and maintained by the operator. The sanitizer solution shall be an EPA-registered disinfectant and shall be recirculated through the jet and/or aeration system in accordance with the disinfectant manufacturer's directions.

(h) Filtration systems and water treatment systems shall be operated according to manufacturer's requirements. Units with these systems shall be located outdoors, unless adequate ventilation is provided in an outside enclosure.

(i) If unit is not located within an outside enclosure, then a protective barrier with a self closing, self latching gate meeting the applicable local or state building code or a cover meeting the applicable ASTM standard shall be used at the facility.

(j) Spas will also be cleaned and sanitized between occupants, and a log documenting cleaning must be maintained onsite, and made readily available at the request of the Health Authority.

Cite as Ga. Comp. R. & Regs. R. 511-6-2-.16
Authority: O.C.G.A. §§ 31-2A-6 and 31-28-5.
History. Original Rule entitled "Swimming Pools" adopted. F. Jul. 16, 2013; eff. Jan. 1, 2014, as specified by the Agency.

Rule 511-6-2-.17. Laundry Facilities.

(1) Where laundry facilities are provided, they shall be separate from other facilities, of sound construction, and shall be kept clean, and in good repair. Laundry rooms for guest use shall be vented to the exterior and well lighted. The tourist laundry equipment provided for tourists to use shall be separate from the tourist accommodation laundry facility. Laundry equipment shall be provided with hot and cold water under pressure. Dryers shall be vented to the outside. A storage area or room shall be required to store clean linens and laundry at least a minimum of 6-inches off the floor and be free of pests, vermin, dust and moisture. If a tourist accommodation does not have an approved laundry facility, the tourist accommodation owner may contract with an approved laundry service provider. In all newly constructed permitted facilities, and existing facilities remodeled or renovated after the adoption of these rules, except for bed and breakfast inn, a floor drain located to receive intentional or accidental drainage from equipment or plumbing shall be required in laundry facilities.

(2) Housekeeper carts shall be so arranged that clean replacement supplies, clean linens, and cleaned and sanitized multi-use equipment and utensils shall be protected from soiled items being removed from each room. Soiled linens and refuse shall be placed in appropriate containers on housekeepers' carts. Any spray bottle used in cleaning a tourist room or stored on the housekeeping cart shall be labeled with its contents. Cleaners and sanitizer shall be used according to the manufacturer's use direction and label.

Cite as Ga. Comp. R. & Regs. R. 511-6-2-.17
Authority: O.C.G.A. §§ 31-2A-6 and 31-28-5.
History. Original Rule entitled "Laundry Facilities" adopted. F. Jul. 16, 2013; eff. Jan. 1, 2014, as specified by the Agency.

Rule 511-6-2-.18. Grounds.

(1) The grounds of a tourist accommodation shall be graded to drain. Serviceable walks and driveways shall be provided.

(2) Grounds, including spaces beneath buildings and trailers, shall be kept clean and free of litter.

(3) All walkways, porches, and hallways shall be maintained in good repair. Only articles necessary to the operation and maintenance of the establishment shall be stored on the premises.

(4) There shall be not less than fifteen feet clear space between all trailers and nearby buildings, nor less than ten feet between trailers and internal driveways within the trailer park.

(5) Each trailer space shall be distinctly marked. Trailer spaces shall abut on a well-defined all-weather driveway of not less than twenty feet of unobstructed width and such driveway shall have clear access to a public thoroughfare.

(6) Grounded and weather-proof electrical outlets supplying at least one-hundred- fifteen volts shall be provided at each trailer space. Power lines shall be located underground or suspended at least eighteen feet above ground. All electrical work and materials shall comply with the applicable International Electrical Code with Georgia Amendments and local laws, ordinances, or regulations.

Cite as Ga. Comp. R. & Regs. R. 511-6-2-.18
Authority: O.C.G.A. §§ 31-2A-6 and 31-28-5.
History. Original Rule entitled "Grounds" adopted. F. Jul. 16, 2013; eff. Jan. 1, 2014, as specified by the Agency.

Rule 511-6-2-.19. Food Service Options.

(1) Food Service Establishment. All food service facilities except for bed and breakfast inns shall comply with provisions of O.C.G.A. Chapter 26-2. Art. 13 and the rules, regulations and standards adopted thereunder. Bed and breakfast inns, and tourist accommodations without a foodservice permit, shall instead comply with this Rule.

(2) Continental Breakfast. A tourist accommodation without a food service permit may serve a continental breakfast as defined in DPH Rule 511-6-2-.03(d); foods not requiring preparation and cooking; potentially hazardous foods commercially prepared and packaged in single-servings; non potentially hazardous foods commercially prepared and packaged and served from the original container or an approved dispenser such as bagels or bread that may require only reheating or toasting by tourists, if the conditions of subsections 2(a) through (j) are met. All food items on display must be protected from contamination. Food shall be safe for human consumption, and obtained from sources that comply with applicable laws.

(a) A minimum two-compartment sink, large enough to fully immerse the largest utensil used and a refrigerator which can maintain food temperatures at or below 41°F (5°C) shall be required. The need for a refrigerator may be waived if no potentially hazardous foods are served.

(b) Condiments containing potentially hazardous ingredients and milk must be stored in a refrigerator, except for individual, single-service coffee creamers that are non-dairy, and individual, single-service, ultra high pasteurized coffee creamers that are labeled by the manufacturer as not requiring refrigeration.

(c) A thermometer, accurate to (+2ºF (±1ºC) shall be provided in the refrigerator and located to be easily readable.

(d) Only single service disposable plates, cups and utensils shall be used in a continental breakfast operation. However, a facility may use multi-use utensils and/or a mechanical bulk juice dispenser, if the operator provides warewashing equipment to wash, rinse and sanitize all multi-use utensils. At minimum, the operator shall install a three compartment sink large enough to fully immerse the largest utensil used and provide adequate space to air-dry and store the utensils.

(e) Ice used for keeping displayed foods cold must be constantly drained and cannot be used in beverages. If ice is needed for beverages, it must be dispensed from self service machines or presented in cups pre-filled by the management. Pre-filling shall be done only with the use of an approved ice scoop.

(f) If ready-to-eat, whole raw, uncut, fruits are included within continental breakfast menus, then adequate protective display equipment such as sneeze guard shielding or other protective display equipment must be provided to protect these food items from contamination from the tourist. In addition, self-service utensils, such as tongs and/or single-service articles, such as sanitary deli paper, must be provided to protect ready-to-eat, whole raw, uncut, fruits from potential contamination from consumer self-service.

(g) In all newly constructed, remodeled, or renovated establishments serving continental breakfasts, an employee handsink equipped with hot and cold water under pressure and maintained with a supply of dispensed soap and paper towels must be provided for hand washing. The handsink shall be located inside the physical facility where the continental breakfast food handling and warewashing operations are conducted. The water at this hand washing sink must be tempered by a mixing faucet.

(h) In all newly constructed, remodeled or renovated establishments serving continental breakfasts, the physical facilities for food storage, food transfer and equipment warewashing shall comply with the following criteria:

1. Physical facilities must be physically and functionally separate from those associated with laundry, janitorial, living and or sleeping activities and associated storage facilities;

2. Floors, floor coverings, walls, wall coverings, and ceilings, with the exception of a ceiling in a non perishable food storage and seating area, shall be designed, constructed, and installed so they are smooth and easily cleanable;

3. Studs, joists, and rafters may not be exposed within physical facilities, except as listed in (h) 2. and

4. Physical facilities shall be so designed and constructed so as to exclude the presence of vermin.

5. All equipment, food, and supplies must be kept at least six inches off of the floor.

(i) Any preparation beyond the limitations of a continental breakfast requires a food service permit.

(3) Bed and Breakfast Inn. A bed and breakfast inn may serve a full meal prepared as referenced in DPH Rule 511-6-2-.03(b) within this Chapter in a residential kitchen located within the inn, if the following requirements are met.

(a) Limited Food Service: Food may only be prepared for guests staying in rooms located in the bed and breakfast inn. No catering off the premises will be allowed.

(b) Food Supplies:

1. Food shall be in sound condition, safe for human consumption, and obtained from sources that comply with the applicable laws relating to food safety. The use of food in hermetically sealed containers that was not prepared in a food processing establishment is prohibited. However, jams, jellies, and preserves made at the bed and breakfast inn from naturally high-acid fruits may be served to guests.

2. Fluid milk and fluid milk products used shall be pasteurized and shall comply with applicable law. Dry milk and milk products used shall be made from pasteurized milk and milk products and shall be used only in cooking. Raw milk shall not be provided or used.

3. Only clean shell eggs meeting U.S. Department of Agriculture grade standards or pasteurized liquid, frozen or dry eggs or pasteurized dry egg products shall be used.

4. Only ice which has been manufactured with potable water and handled in a sanitary manner shall be used.

(c) Food Protection:

1. All food shall be prepared, stored, displayed, dispensed, placed, transported, sold, and served so as to be protected from dirt, vermin, unnecessary handling, droplet contamination, overhead leakage, or other contamination.

2. The temperature of potentially hazardous foods shall be 41°F (5°C) or below or 135ºF (60°C) or above at all times, except during necessary times of preparation.

(i) Potentially hazardous foods shall be stored in a refrigerator or freezer that can maintain required product temperatures.

(ii) A thermometer accurate to ±2°F shall be provided for each refrigeration unit and shall be located to indicate the air temperature in the warmest part of the unit and shall be affixed to be readily visible.

(iii) Containers of potentially hazardous food displayed for service may be placed in an ice bed or held by a similar means which maintains the food at or below 41°F. An accurate easily readable metal probe thermometer suitable for measuring the temperature of food shall be readily available on the premises.

3. Hermetically sealed packages shall be handled so as to maintain product and container integrity.

4. Containers of food shall be stored a minimum of six inches above the floor in a manner that protects the food from splash and other contamination and that permits easy cleaning of the storage area.

5. Pets may be present on the premises, but shall be kept out of food preparation and dining areas at all times. This exclusion shall not apply to fish in aquariums. Service animals accompanying handicapped persons and trainers of such animals shall be permitted in dining areas.

6. Laundry facilities may be present in the residential kitchen, but shall not be used during food preparation and service. Laundry facilities will consist of at least a residential clothes washer and dryer and adequate storage facilities for clean laundry and separation of soiled laundry and supplies.

7. Tourists shall not be allowed to use cooking facilities in the residential kitchen.

8. No insecticide, rodenticide, or other poisonous substance shall be stored in any food preparation area, except in a separate enclosure provided for that purpose. All poisonous substances, detergents, bleaches, cleaning compounds, or any other injurious or poisonous material shall be specifically and plainly labeled as to contents and hazardous use and shall be stored only in their original, labeled container. Such products shall not be used or stored in a manner which may cause contamination or adulteration of food, food contact surfaces, or utensils.

(d) Food Preparation:

1. Food shall be prepared with a minimum of manual contact. Food shall be prepared on food-contact surfaces and with utensils that are clean and have been sanitized. Food handlers shall not handle or touch ready-to-eat foods with their bare hands.

2. Raw fruits and raw vegetables that will be cooked, cut, or combined with other ingredients, or that will be otherwise processed into food products by the food establishment, shall be cleaned with potable water in sinks or containers that have been washed and sanitized before being used.

3. Potentially hazardous food (time/temperature control for safety food) processed by cooking shall be cooked to heat all parts of the food to a minimum time/temperature as follows:

   (i) shell eggs (for immediate service), beef steak, and unground meat and fish shall be cooked to an internal temperature of 145°F (63°C) or above for 15 seconds;

   (ii) ground meat and pork, fish, game animals raised for food, and eggs for hot holding shall be cooked to an internal temperature of at least 155°F (68°C) for 15 seconds;

   (iii) roast beef shall be cooked to an internal temperature of at least 130°F (54°C) for 112 minutes;

   (iv) poultry or any stuffed meat, poultry, or fish shall be cooked to an internal temperature of 165°F (74°C) for 15 seconds. See the Department's rules and regulations governing food service establishments Chapter 511-5-14 or future subsequent Chapters adopted thereafter for reference to time/temperature cooking requirements.

4. Potentially hazardous foods (time/temperature control for safety foods) shall be cooked and immediately served to tourists. The following potentially hazardous food handling practices are prohibited:

   (i) Cooling and reheating prior to service.

   (ii) Hot holding for more than two hours.

   (iii) Undercooked or raw potentially hazardous food (time/temperature control for safety food) of animal origin served to tourists.

   (iv) Service of leftovers.

5. All frozen food shall be kept frozen until preparation. No food which has been thawed shall be refrozen unless it has been cooked or processed. Potentially hazardous foods shall be thawed:

   (i) In refrigerated units at a temperature not to exceed 41°F (5°C); or

   (ii) Under potable running water at a temperature of 70°F (21°C) or below, with sufficient water velocity to agitate and float off loose food particles into the overflow and for a period of time not to exceed that reasonably required to thaw the food; or

   (iii) In a microwave oven only when the food will be immediately transferred to conventional cooking units as part of a continuous cooking process or when the entire, uninterrupted cooking process takes place in the microwave oven; or

   (iv) As part of the conventional cooking process.

(e) Food Display and Service:

1. Employees serving food shall use tongs, other utensils, or wear plastic gloves.

2. When food is displayed for customer self service, it is not necessary to have protective sneeze shields as long as the following guidelines are met.

   (i) Potentially hazardous foods are kept at or below 41°F (5° C) or at or above 135°F (57°C).

   (ii) Food is displayed no more than two hours.

   (iii) No open food or potentially hazardous foods is reserved or reused.

   (iv) Tongs or other suitable utensils are provided so that there is no hand contact with the food.

(f) Health and Practices:

1. No person, while infected with a disease in a communicable form that can be transmitted by foods, or who is a carrier of organisms that cause such a disease, as stated within the Department's rules and regulations governing food service establishments Chapter 511-5-14 or future subsequent Chapters adopted thereafter, or while affected with a boil, infected wound, or acute respiratory infection, shall work in any capacity in which there is a likelihood of such person contaminating food or food contact surfaces with pathogenic organisms or transmitting disease to other persons.

2. Persons engaged in food preparation, service, and warewashing operations shall wear clean clothing and properly wash their hands and the exposed portions of their arms with soap or detergent and warm water before starting work, after smoking, eating, or using the toilet, and as often as is necessary during work to keep them clean. Employees shall keep their fingernails trimmed and clean. All bed and breakfast inns permitted or extensively remodeled after the effective date of this rule shall provide facilities exclusively for handwashing within or adjacent to each kitchen. In bed and breakfast inns existing prior to the effective date of these "Rules", the utensil warewashing sink may be used for handwashing. Soap and paper towels in dispensers must be provided.

3. Persons engaged in food preparation shall wear a hair net, cap, or other suitable covering which restrains all loose hairs and shall maintain a high degree of personal cleanliness and conform to good hygienic practices during all working periods.

4. Employees shall consume food or use tobacco only in designated areas. Such designated areas shall not be located in food preparation areas or in areas where the eating or tobacco use of an employee may result in contamination of food, equipment, or utensils.

(g) Equipment and Utensils:

1. Equipment and utensils shall be constructed and repaired with safe materials, including finishing materials; shall be corrosion resistant and nonabsorbent; and shall be smooth, easily cleanable and durable under conditions of normal use. Single service articles shall be made from clean, sanitary, and safe materials. Equipment, utensils and single service articles shall not impart odors, color and taste nor contribute to the contamination of food.

2. Safe plastic or safe rubber or safe rubber-like materials that are resistant under normal conditions of use to scratching, scoring, decomposition, grazing, chipping, and distortion, that are of sufficient weight and thickness to permit cleaning and sanitizing by normal warewashing methods are permitted for repeated use.

3. Single service articles shall not be re-used.

4. All equipment and utensils shall be maintained in good repair.

(h) Cleaning and Sanitization of Equipment and Utensils:

1. Food utensils and equipment shall be stored in a manner to avoid contamination.

2. Food contact surfaces and sinks shall be smooth and easily cleanable.

3. Food contact equipment, surfaces, tableware, and utensils shall be cleaned and sanitized prior to food preparation for the public and after each use.

4. Sinks, basins, or other receptacles used for cleaning of equipment and utensils shall be cleaned before use.

5. Equipment and utensils shall be pre-flushed or pre-scraped and, when necessary, presoaked to remove food particles and soil.

6. Manual cleaning and sanitizing of cooking equipment, utensils, and tableware shall be conducted as follows:

   (i) A 3-compartmented, warewashing sink shall be provided and used. The Health Authority may allow the use of compartments other than sinks.

   (ii) All five steps of the warewashing process shall be completed: pre-rinsing or scraping; application of cleaners for soil removal; rinsing to remove cleaning chemicals; sanitizing and air drying.

   (iii) Sanitizing may be accomplished by immersion or sanitizing in place with the use of a 50 ppm chlorine solution or 12.5 ppm iodine solution or other chemical sanitizer which meets the requirements of 40 Code of Federal Regulation 180.940 Tolerance exemptions for active and inert ingredients for use in antimicrobial formulations (food-contact surface sanitizing solutions).

   (iv) Wash, rinse and sanitizing solutions shall be maintained in a clean condition.

   (v) Water for washing and rinsing shall be maintained at 110°F (43°C) or above. Water for sanitizing shall be maintained at 75°F (24°C) or above. If using iodine for chemical sanitization, water shall be at a pH not higher than 5.0.

   (vi) A test kit or device that measures the parts per million concentration of the sanitizing solution shall be used each time the sanitizing solution is changed.

7. Mechanical cleaning and sanitizing shall be conducted as follows:

(i) A commercial warewasher must be certified by NSF standards or equivalent, in good repair and operating to manufacturer's specifications.

(ii) If using a non-commercial warewasher, it must remove all physical soil from all surfaces of dishes and must be equipped with a high temperature rinse cycle such as a sani-cycle and all cycles on the machine must be used (prewash, wash, sanitizing rinse) and be certified by NSF standards or,

(iii) If no high temperature rinse cycle is provided, the hot water supplied to the machine must be at a minimum of 155°F (68°C). The operator shall use daily, a maximum registering thermometer or a heat thermal label to determine that the sanitizing rinse water temperature is a minimum of 155°F (68°C).

(iv) The dishwasher warewasher must be installed and operated according to manufacturer's instructions for the highest level of sanitization possible when sanitizing residential kitchen facilities' utensils and tableware. A copy of the instructions must be available on the premises at all times.

8. There shall be sufficient area or facilities such as portable dish tubs and drain boards for the proper handling of soiled utensils prior to washing and of cleaned utensils after sanitization. Use shall not to interfere with safe food handling, handwashing, and the proper use of dishwashing facilities. Equipment, utensils, and tableware shall be air dried only.

Cite as Ga. Comp. R. & Regs. R. 511-6-2-.19
Authority: O.C.G.A. §§ 31-2A-6 and 31-28-5.
History. Original Rule entitled "Food Service Options" adopted. F. Jul. 16, 2013; eff. Jan. 1, 2014, as specified by the Agency.

Rule 511-6-2-.20. Compliance Procedures.

(1) Summary Suspension of Permits. The Health Authority shall have the power and authority to summarily suspend a permit if the owner or operator refuses to allow the Health Authority to enter upon and inspect the premises of the tourist accommodation at any reasonable time and in a reasonable manner, or if any part of the tourist accommodation presents an imminent health hazard to members of the public, including but not limited to (i) an unapproved or improperly functioning wastewater disposal

system, (ii) an infestation of insects, rodents, or other vermin, or (iii) an unapproved water supply or inadequate water system.

(a) A summary suspension shall be made in writing and shall be effective immediately upon receipt by the owner or operator, and operation of the tourist accommodation must cease immediately. If neither the owner nor operator can be found, notification is achieved by tacking the notice to the front door of the tourist accommodation and mailing a copy to the owner or operator. The notice of suspension shall state the violations that justify summary suspension, and the corrective action that must be taken in order for the summary suspension to be lifted.

(b) The owner or operator may seek review of the summary suspension by written request to the District Health Director. The matter shall be heard by the District Health Director, or a supervisory level employee designated by the District Health Director who was not personally involved in the inspection, acting as a review official. The Health Authority shall make every effort to arrange a hearing within 72 hours of the request.

(c) The hearing shall be conducted informally and without application of the rules of evidence. Both the Environmental Health personnel and the owner or operator shall be given an opportunity to present any arguments or evidence in support of their positions. The review official may uphold the summary suspension, or may modify or lift the suspension on such conditions as may be appropriate.

(d) The owner may request a hearing under this subsection without prejudice to its right to pursue an appeal to the Department pursuant to O.C.G.A. § 31-5-3.

(2) Partial closure or restricted access. The Health Authority shall be authorized to close or restrict access to any area of the premises found in violation of a critical item under Areas of Critical Public Health Risk on the Tourist Accommodation Inspection Record or that may be determined by the Health Authority to be an imminent health hazard to the public. Such area shall be closed until the violations have been corrected or imminent health hazards abated as determined by the Health Authority.

(a) Closure and restriction actions must be recorded on an inspection record, identifying the problem and the corrective actions to be taken by the permit holder or person in charge; and

(b) The date and time the violation was noted, and the expected date of correction to be completed must be recorded on the inspection record as well.

(c) Considering the nature and the complexity of the corrective action or plan for correction required, the Health Authority may specify that the permit holder obtain the services of an appropriate licensed professional to correct a violation or imminent health hazard. Then, the operator must submit a plan of correction developed by the professional for review by the Health Authority. Upon

completion of the corrective action, a letter of verification signed by the appropriate professional must be submitted before scheduling a re-inspection as specified in subsection(2)(d) of this Rule. Failure to comply with these actions may led to an enforcement action outlined in subsection (1)(a) of this Rule.

(d) At its discretion, the Health Authority shall have the authority to direct the permit holder or person in charge to relocate tourists to another location within the tourist accommodation. If such action is taken, the Health Authority will provide a detailed explanation of such action on the inspection report form, and a re-inspection of the vacated area by the Health Authority will be required before tourists are permitted to return to locations from which they had been previously removed.

(3) Suspension or Revocation of Permits. The Health Authority shall have the power and authority to suspend or revoke a permit if the owner or operator of a tourist accommodation is unwilling or unable to comply with these regulations, the regulations of the local Health Authority, or the provisions of O.C.G.A. Title 31-28-1 *et seq.*

(a) An owner or operator shall be presumed unwilling or unable to comply if he or she refuses to allow the Health Authority to enter upon and inspect the premises of the tourist accommodation at any reasonable time and in a reasonable manner, or if any critical violation is found to be uncorrected upon the third consecutive inspection, or upon continuous violation of other rules in the chapter.

(b) The revocation of a permit may be appealed to the Department of Public Health in accordance with O.C.G.A. Section 31-5-3 by sending written notice, by certified mail or statutory overnight delivery, addressed to the Department of Public Health, Office of General Counsel, with a copy to the Health Authority official that revoked the permit. Within ten days of receiving the notice, the Health Authority shall provide the Department with a copy of its entire file on the inspections and actions that led to the revocation of the permit. The Department shall schedule a hearing within 20 days of receiving the notice, and shall decide the matter upon the arguments of the parties and the administrative record.

(4) Voluntary Closure. In lieu of suspension or revocation of a permit, the Health Authority may in its discretion allow a tourist accommodation to voluntarily close all or part of the premises until such time as violations are corrected, and upon such additional restrictions as it may deem appropriate.

(5) Resumption of Operations. If operations of a tourist accommodation are discontinued due to the order or action of the Health Authority, then the permit holder shall obtain approval from the Health Authority before resuming operations.

Cite as Ga. Comp. R. & Regs. R. 511-6-2-.20
Authority: O.C.G.A. §§ 31-2A-6, 31-5-3, and 31-28-5.
History. Original Rule entitled "Compliance Procedures" adopted. F. Jul. 16, 2013; eff. Jan. 1, 2014, as specified by

the Agency.

Rule 511-6-2-.21. Environmental Health Personnel.

(1) All Environmental Health personnel who are assigned responsibilities in tourist accommodation plan review, permitting, inspecting, or other means of enforcing this Chapter, will complete the minimum state sponsored one week training course and exam requirements and obtain at least two hours of in-service training annually.

(2) All in-service training must be approved by the local Environmental Health supervisor or lead personnel. Employee attendance records of approved training shall be maintained in the county of employment and shall be subject to electronic submission and Department monitoring.

Cite as Ga. Comp. R. & Regs. R. 511-6-2-.21
Authority: O.C.G.A. §§ 31-2A-6 and 31-28-5.
History. Original Rule entitled "Environmental Health Personnel" adopted. F. Jul. 16, 2013; eff. Jan. 1, 2014, as specified by the Agency.

Rule 511-6-2-.22. Fees.

The Department may adopt a fee schedule to support required training, monitoring, and evaluation activities.

Cite as Ga. Comp. R. & Regs. R. 511-6-2-.22
Authority: O.C.G.A. §§ 31-2A-6 and 31-28-5.
History. Original Rule entitled "Fees" adopted. F. Jul. 16, 2013; eff. Jan. 1, 2014, as specified by the Agency.

Rule 511-6-2-.23. Effective Date.

These regulations shall become effective on January 1, 2014.

Cite as Ga. Comp. R. & Regs. R. 511-6-2-.23
Authority: O.C.G.A. §§ 31-2A-6 and 31-28-5.
History. Original Rule entitled "Effective Date" adopted. F. Jul. 16, 2013; eff. Jan. 1, 2014, as specified by the Agency.

Chapter 511-7. VOLUNTEER PROGRAMS.

Subject 511-7-1. GEORGIA VOLUNTEER HEALTH PROGRAM.

Rule 511-7-1-.01. Definitions.

The words used in these rules shall have the usual and customary meaning ascribed to them, unless otherwise defined or the context thereof shall clearly indicate the contrary. As used in this Chapter, the term:

(1) "Adverse incident" means an incident of medical negligence, intentional misconduct, and any other act, neglect, or default of the Health Care Provider that caused or could have caused injury to or death of a patient including, but not limited to, those incidents that are required by state or federal law to be reported to any governmental agency or body, and occurrences that are reported to or reviewed by any health care facility peer review, risk management, quality assurance, credentials, or other similar committee.

(2) "Commissioner" shall mean the Commissioner of the Department of Public Health.

(3) "Contract" shall mean an agreement between the Department and a Health Care Provider wherein the Health Care Provider offers uncompensated Health Care to Patients or compensated Health Care to Patients, for those Providers that are eligible under Georgia Law. Payments made to a Health Care Provider from the Indigent Care Trust Fund created by O.C.G.A. § 31-8-192(1) shall not be considered compensation.

(4) "Covered Services" shall mean those services that a Health Care Provider is able to perform competently and at the prevailing standard of care. It shall also mean and include all those services which he or she is allowed to perform under his or her professional license.

(5) "DPH" or "Department" shall mean the Georgia Department of Public Health or its designees.

(6) "DHS" shall mean the Georgia Department of Human Services.

(7) "Director" shall mean the individual designated by the Commissioner of the Department of Public Health who has supervisory oversight for Regional Volunteer Coordinators, as well as oversight for all aspects of the Program.

(8) "DOAS" shall mean the Georgia Department of Administrative Services.

(9) "Eligibility Records" shall mean any and all documents utilized to make a determination as to whether a person is eligible to participate in the Georgia Volunteer Health Care Program.

(10) "Emergency Care" shall mean health care that is provided for a condition of recent onset and sufficient severity including, but not limited to, severe pain that would lead a prudent layperson, possessing an average knowledge of medicine and health, to believe that his or her condition, sickness, or injury is of such a nature that failure to obtain immediate health care could result in:

(a) Placing the patient's health in serious jeopardy;

(b) Serious impairment to bodily functions; or

(c) Serious dysfunction of any bodily organ or part.

(11) "Experimental/clinically unproven procedures" shall mean the use of a service, supply, drug, or device not recognized as standard health care for the condition, disease, illness, or injury treated.

(12) "Family" shall mean one or more persons living in one dwelling place who are related by parentage, marriage, law, or conception. For example, a pregnant woman and her unborn child or children are considered to be two or more family members. If the dwelling place includes more than one family or more than one unrelated individual, the poverty guidelines are applied separately to each family or unrelated individual and not to the dwelling place as a whole. A single adult, over 18, living with relatives is considered to be a separate family for income determination purposes. A full-time student, age 18-21, living at the dwelling place, shall be considered a family member. For purposes of this definition, a full-time student shall be registered for the minimum number of hours required to meet the accredited institution's fulltime status.

(13) "Goods and Services" shall include, but not be limited to, medical/dental supplies and equipment, in-kind and monetary contributions, or the actual hours a Volunteer dedicates to the Program.

(14) "Gross Family Income" shall mean the sum of income available to a family at the time of application. Gross Family Income shall be based on all income or compensation earned or received in the last four consecutive weeks. Income shall not include: Supplemental Security Income (SSI), income from trusts fully funded by SSI payments, Temporary Assistance to Needy Families (TANF), or any other governmental assistance. Generally, Gross Family Income shall include, but not be limited to, the following:

(a) Wages and salary;

(b) Child support;

(c) Alimony;

(d) Unemployment compensation;

(e) Worker's compensation;

(f) Retirement Income;

(g) Veteran's pension;

(h) Social Security;

(i) Pensions and annuities;

(j) Dividends and interest on savings, stocks, and bonds;

(k) Income from estates and trusts;

(l) Net rental income or royalties;

(m) Net income from self employment; and

(n) Other forms of compensation or financial contributions.

(15) "Health Care" shall mean care, services, or supplies related to the health of an individual. Health Care includes, but is not limited to, the following:

(a) preventive, diagnostic, therapeutic, rehabilitative, maintenance, or palliative care and counseling, service, assessment, or procedure with respect to the physical or mental condition, or functional status, of an individual or that affects the structure or function of the body; and

(b) the sale or dispensing of a drug, device, equipment, or other items in accordance with a prescription. "Health Care" shall include "Medical Care," "Dental Care," and/or "Emergency Care."

(16) "Health Care Provider" shall mean:

(a) An ambulatory surgical center licensed under Article 1 of Chapter 7 of Title 31 of the Official Code of Georgia Annotated;

(b) A hospital or nursing home licensed under Article 1 of Chapter 7 of Title 31 of the Official Code of Georgia Annotated;

(c) A physician or physician assistant licensed under Article 2 of Chapter 34 of Title 43 of the Official Code of Georgia Annotated;

(d) An osteopathic physician or osteopathic physician assistant licensed under Article 2 of Chapter 34 of Title 43 of the Official Code of Georgia Annotated;

(e) A chiropractic physician licensed under Chapter 9 of Title 43 of the Official Code of Georgia Annotated;

(f) A podiatric physician licensed under Chapter 35 of Title 43 of the Official Code of Georgia Annotated;

(g) A physical therapist licensed under Chapter 33 of Title 43 of the Official Code of Georgia Annotated;

(h) A registered nurse, nurse midwife, licensed practical nurse, or advanced registered nurse practitioner licensed or registered under Chapter 26 of Title 43 of the Official Code of Georgia Annotated or any facility which employs nurses licensed or registered under Chapter 26 of Title 43 of the Official Code of Georgia Annotated to supply all or part of the care delivered under this article;

(i) A midwife certified under Chapter 26 of the Official Code of Georgia Annotated;

(j) A dentist or dental hygienist licensed under Chapter 11 of Title 43 of the Official Code of Georgia Annotated;

(k) A health maintenance organization certificated under Chapter 21 of Title 33 of the Official Code of Georgia Annotated;

(l) A professional association, professional corporation, limited liability company, limited liability partnership, or other entity which provides or has members which provide health care services;

(m) A safety net clinic, which includes any other medical facility the primary purpose of which is to deliver human dental or medical diagnostic services or which delivers non-surgical human medical treatment and which may include an office maintained by a provider;

(n) Any other health care professional, practitioner, provider, or facility under contract with the Department, including a student enrolled in an accredited program that prepares the student for licensure as any one of the professionals listed in subparagraphs (a) through (j) of this paragraph;

(o) Any nonprofit corporation qualified as exempt from federal income taxation under Section 501(c) of the Internal Revenue Code which delivers health care services provided by licensed professionals listed in this paragraph; or

(p) Any federally funded Public health center, Volunteer Corporation, or volunteer health care provider that delivers health care services.

(17) "Medicaid eligible" shall mean an individual eligible to receive services under the Medicaid Program, whether or not actually enrolled in the Medicaid Program.

(18) "Patient Records" shall mean any and all documents, records, and items related to and arising out of an individual's Health Care including, but not limited to, x-rays, laboratory tests results, examinations, nurse's notes, physician's notes, tests requested, and general notes.

(19) "Net Family Income" shall mean Gross Family Income minus the standard work related, child care, and child support deductions as used in determining presumptive eligibility

for Medicaid expansion as designated by the Omnibus Budget Reconciliation Act of 1986.

(20) "Program" shall mean the Georgia Volunteer Health Care Program.

(21) "Patient" shall mean:

(a) A person who is Medicaid eligible in Georgia;

(b) A person who is without health or dental insurance;

(c) A person who has health or dental insurance that does not cover the injury, illness, or condition for which treatment is sought and whose family income does not exceed 200 percent of the federal poverty level as defined annually by the Federal Office of Management and Budget; or

(d) Any client or beneficiary of the Department or the Department of Human Services who voluntarily chooses to participate in a Program offered or services approved by the Department or the Department of Human Services and meets the Program eligibility guidelines of the Department or the Department of Human Services whose family income does not exceed 200 percent of the federal poverty level as defined annually by the federal Office of Management and Budget.

(22) "Referral" shall typically mean when a participating Health Care Provider directs a patient to another participating Health Care Provider or a patient who is seen on a walk-in basis.

(23) "Regional Volunteer Coordinator" shall mean an individual assigned to a specific region in the state of Georgia responsible for certain administrative and supervisory duties specifically related to the operations of the Program.

(24) "Self-declaration" shall mean a statement of income, expenses, and family size made by the individual applying for the Program. Self-declaration does not include any documentation other than the signature of the person making the statement. The self-declaration statement shall include a signed acknowledgement that the statement is true at the time it is made and that the person making the statement understands that the Department may verify the statement.

(25) "Verification" shall mean to confirm the accuracy of information through sources other than the self-declaratory statement of the individual originally supplying the information. Verification may be by telephone, in written form, or by face-to-face contact. Verification does not require written documentation to confirm an applicant's statement. Examples of verification include, but are not limited to:

(a) A statement from a state or federal agency which attests to the applicant's financial status;

(b) A statement from the applicant's or family member's employer;

(c) Pay stubs for four consecutive weeks; or

(d) A statement from a source providing unearned income to the applicant or family unit.

(26) "Volunteer" means any person who, of his or her own free will, and in support of or in assistance to the Program of Health Care Services provided to any governmental contractor, provides goods or clerical services, computer services, or administrative support services with or without monetary or material compensation. This term shall not include a health care provider.

Cite as Ga. Comp. R. & Regs. R. 511-7-1-.01
Authority: O.C.G.A. Secs. 31-2A-6, 31-8-200.
History. Original Rule entitled "Definitions" adopted. F. Sep. 20, 2013; eff. Oct. 10, 2013.

Rule 511-7-1-.02. Administration of the Program.

(1) The Commissioner shall designate a Director to maintain overall oversight of the Program, responsible for the promotion, technical support, and standardization of the Program. The Director shall supervise Regional Volunteer Coordinators, as well as any other Department staff assigned to the Program.

(2) Each Regional Volunteer Coordinator shall be assigned to a specific geographic region of the state of Georgia, as defined by the Department. The Regional Volunteer Coordinator shall be tasked with the following responsibilities:

(a) Assists with recruiting Health Care Providers, negotiates Health Care Provider Contracts, and ensures appropriate license verification of the Health Care Provider upon initial entry into the Program and on an annual basis;

(b) Reviews the status of Health Care Provider corporations upon initial entry into the Program and on an annual basis;

(c) Monitors participating Health Care Providers through an administrative quality Assurance Program, as defined by the Department, to ensure compliance with the Program policies and procedures as well as with compliance with these Rules;

(d) Establish processes to ensure participating volunteers allow participation by eligible individuals in the Program and that eligibility determination is documented appropriately;

(e) Maintains a summary on a periodic basis, as defined by the Department, of the number of Volunteers, donated hours, and value of service rendered by Volunteers;

(f) Conducts training on record retention, HIPAA, financial eligibility and patient referral procedures, and other state and federal mandates that impact the Program, and

(g) Maintains a database documenting the participation of Health Care Providers and Volunteers participating in the Program.

Cite as Ga. Comp. R. & Regs. R. 511-7-1-.02
Authority: O.C.G.A. Secs. 31-2A-6, 31-8-200.
History. Original Rule entitled "Administration of the Program" adopted. F. Sep. 20, 2013; eff. Oct. 10, 2013.

Rule 511-7-1-.03. Health Care Provider Eligibility.

(1) The Department shall be authorized to contract with Health Care Providers to offer Health Care to Patients under what shall be formally known as the "Georgia Volunteer Health Care Program."

(2) In order to participate in the Program, a Health Care Provider shall comply with the following:

(a) Have and maintain, in good standing, the applicable Georgia health professional license and any other licenses, certificates, or permits that are required to practice their profession as a condition of participation in the Program as a Health Care Provider;

(b) Enter into a Contract with the Department to provide Health Care to Patients as set forth in Rule 511-7-1-.08;

(c) Not be subject to probation or suspension or other limitation of the Health Care Provider's scope of practice by the applicable licensing board or intermediate sanctions by the Centers for Medicare and Medicaid Services or have Medicare or Medicaid violations;

(d) Submit to a credentialing process, as specified by the Department, to determine acceptability of participation;

(e) Provide services to Patients on both a walk-in and referral basis; and

(f) Participate in a quality assurance program as specified by the Department.

Cite as Ga. Comp. R. & Regs. R. 511-7-1-.03
Authority: O.C.G.A. Secs. 31-2A-6, 31-8-200.
History. Original Rule entitled "Health Care Provider Eligibility" adopted. F. Sep. 20, 2013; eff. Oct. 10, 2013.

Rule 511-7-1-.04. Volunteers.

(1) Health Care Providers shall recruit Volunteers to perform certain responsibilities to assist in providing Health Care to Patients. These responsibilities include, but are not limited to

(a) Assisting patients with financial eligibility determinations as required by the Department; and

(b) Providing other clerical, computer, and administrative support as required. With regard to performing financial eligibility determinations and patient referrals, only those Volunteers specifically authorized and deemed appropriate by the Department shall perform such duties.

(2) Prior to a Health Care Provider's recruitment of a Volunteer, the Volunteer must participate in a screening and orientation process as specified by the Department. Additionally, the Volunteer and Department must execute a written agreement with provisions that address the following:

(a) Scope of work of the Volunteers;

(b) Responsibilities regarding documentation of donated hours contributed to Program activities;

(c) Acknowledgment and agreement to adhere to HIPAA and applicable federal and state confidentiality laws; and

(d) A statement that the Volunteer is considered a state employee or officer for purposes of sovereign immunity so long as he or she has acted within the scope of services defined in the agreement.

(3) The Department is authorized to utilize Volunteers to perform certain duties as the Department deems necessary so long as the Department executes a written agreement as described in subsection (2) of this Rule.

Cite as Ga. Comp. R. & Regs. R. 511-7-1-.04
Authority: O.C.G.A. Secs. 31-2A-6, 31-8-200.
History. Original Rule entitled "Volunteers" adopted. F. Sep. 20, 2013; eff. Oct. 10, 2013

Rule 511-7-1-.05. Patient Selection and Referral.

(1) The Department may, in its discretion, delegate the responsibility for determining the applicant's financial eligibility process to a Health Care Provider. In the event that the Department makes such a designation, the Health Care Provider shall make the financial eligibility determinations and patient referrals in accordance with Rule 511-7-1.06 and shall only utilize Volunteers in the manner prescribed in Rule 511-7-1-.04 for making financial eligibility determinations and patient referrals.

(2) Health Care Providers shall be required to accept all referrals unless the Contract between the Department and the Health Care Provider(s) authorizes a specific limit on the number of Patients that may be referred to a Health Care Provider.

(3) Neither the Department nor its designees may refer a Patient to a Health Care Provider unless a determination has been made that the Patient is eligible to participate in the Program.

(4) If a Patient has been referred by the Department, neither the Health Care Provider nor the facility in which the Health Care is rendered shall be permitted to charge the Patient.

Cite as Ga. Comp. R. & Regs. R. 511-7-1-.05
Authority: O.C.G.A. Secs. 31-2A-6, 31-8-200.
History. Original Rule entitled "Patient Selection and Referral" adopted. F. Sep. 20, 2013; eff. Oct. 10, 2013.

Rule 511-7-1-.06. Eligibility.

(1) In order to determine if an individual is eligible for participation in the Program the Department shall be required to obtain a self-declaration of income and expenses from the individual on a form specified by the Department. Applicants must furnish income and expenses for the four week period prior to the date of the application which shall include, but not be limited to, Eligibility Records regarding the Gross Family Income for the family unit, child care expenses, and child support payments. The Department may seek Verification to confirm that the applicant qualifies for participation in the Program. Such eligibility determinations shall be made upon notification by the patient that his or her financial status has changed.

(2) The Department shall use Gross Family Income to determine eligibility.

(3) If the Department determines that the applicant has intentionally omitted or failed to provide pertinent information and/or falsified or misrepresented information that the Department relied upon to determine eligibility, the Department shall terminate the applicant from participation in the Program, and the applicant will be considered ineligible for any further participation in the Program. Any challenge to the Department's determination shall be governed by O.C.G.A. Section 50-13-13*et seq.* Despite such a termination, the Health Care Provider shall still be considered immune from liability and suit as set forth in Ga. Admin. Comp. Ch. 111-5-1-.11 as long as the Health Care Provider acted within the scope of services set forth in the Contract with the Department.

Cite as Ga. Comp. R. & Regs. R. 511-7-1-.06
Authority: O.C.G.A. Secs. 31-2A-6, 31-8-200.
History. Original Rule entitled "Eligibility" adopted. F. Sep. 20, 2013; eff. Oct. 10, 2013.

Rule 511-7-1-.07. Covered Services.

(1) Health Care Providers may not perform Experimental/Clinically Unproven Procedures in connection with the Program. Health Care Providers shall only provide Covered Services as defined in Rule 511-7-1-.01(4).

(2) In the event that a Health Care Provider performs an Experimental/Clinically Unproven Procedure, the provider's claim to sovereign immunity shall be deemed waived and the Contract between the Health Care Provider and the Department shall terminate immediately.

(3) The Department reserves the right to approve, through written protocols, all referrals for specialty care and hospitalization, with the exception of Emergency Care.

Cite as Ga. Comp. R. & Regs. R. 511-7-1-.07
Authority: O.C.G.A. Secs. 31-2A-6, 31-8-200.
History. Original Rule entitled "Covered Services" adopted. F. Sep. 20, 2013; eff. Oct. 10, 2013.

Rule 511-7-1-.08. Contracts.

A Health Care Provider must execute a Contract with the Department prior to delivering Health Care to Patients which shall include, but not be limited to, the following provisions:

(1) Access to Records. As governed by applicable state and federal laws, the Health Care Providers shall make all Patient Records and other documents related to the Health Care provided under the Program available to the Department and state and/or federal entities that are legally entitled to request and examine them.

(2) Termination. The Department is authorized to terminate the Health Care Provider from participating in the Program for the following reasons:

(a) Failure of the Health Care Provider to perform responsibilities identified in the Contract within a time period prescribed by DPH after receipt of written notice of default by DPH.

(b) Convenience of DPH or the Health Care Provider, upon thirty (30) calendar days notice.

(c) The performance of an Experimental/Clinically Unproven procedure.

(d) Health Care Provider's failure to be deemed acceptable under a credentialing process wherein the termination shall be immediate.

(e) Suspension, probation, conditional restriction, debarment, or revocation of any license, certificate, or permit required for the Health Care Provider to perform the full scope of services pursuant to the terms and conditions of this Agreement.

(f) A determination by the appropriate department, agency, or board that the Health Care Provider has failed to provide Health Care in accordance with applicable standards of care.

(g) The amendment or repeal of O.C.G.A. 31-8-190*et seq.* wherein the Health Care Provider is not considered a state officer or employee for purposes of Article 2 of Chapter 21 of Title 50 of the Official Code of Georgia Annotated.

If termination occurs as a result of a reason set forth in subsection (2)(e) or (f), the Department remay in its discretion reinstate the Health Care Provider if the determination upon which the termination is based is reversed.

(3) Adverse Incidents.

(a) Health Care Providers must report to the Department within twenty-four hours of such occurrence following the Adverse Incidents:

1. Any unanticipated Patient death not related to the natural course of the Patient's illness or underlying condition;

2. A rape, as defined pursuant to O.C.G.A. § 16-6-1, that occurs on the premise at which the Health Care is provided;

3. Any surgery on the wrong Patient or on the wrong body part of the Patient;

4. Any Patient injury which is unrelated to the Patient's illness or underlying condition and results in a permanent loss of limb or function;

5. Second or third degree burns involving twenty percent or more of the body surface of an adult patient or fifteen percent or more of the body surface of a child which burns were acquired by the Patient while in the care of the Health Care Provider;

6. Serious injury to a Patient resulting from the malfunction or intentional or accidental misuse of patient care equipment;

7. Any assault, committed pursuant to O.C.G.A. § 16-5-21*et seq.* or any other applicable law, on a Patient, which results in an injury requiring treatment;

8. Discharge of an infant to the wrong family;

9. Any circumstances involving a patient under observation who cannot be located where circumstances reasonably indicate that the health, safety, or welfare of the Patient or others are at risk and the Patient has been missing for more than eight hours; and

10. To the extent that the Health Care Provider determines that the following events caused a significant disruption to a Patient's care, labor strikes, walk-outs or sick-outs, or interruption of service.

    The Adverse Incidents set forth in this Paragraph are not intended to be an exhaustive list.

(b) The Department shall report adverse incidents provided in subsection (3)(a) of this Rule to the appropriate department, agency, or board for further action. Notwithstanding, the Department may conduct its own investigation and terminate the Health Care Provider if the Department deems such action necessary and appropriate.

(4) Patient Number Modifications. The Department and a Health Care Provider may mutually agree in writing to modify the number of Patients referred to the Health Care Provider.

Cite as Ga. Comp. R. & Regs. R. 511-7-1-.08
Authority: O.C.G.A. Secs. 31-2A-6, 31-8-200.
History. Original Rule entitled "Contracts" adopted. F. Sep. 20, 2013; eff. Oct. 10, 2013.

Rule 511-7-1-.09. Notice Requirements.

(1) Each Health Care Provider, prior to providing Health Care, must provide written notice to each Patient, or to the Patient's legal representative, receipt of which must be acknowledged in writing on a form prescribed by the Department, that the Health Care Provider is an agent of the Department and that the exclusive remedy for injury or damage suffered as a result of any act or omission of the Health Care Provider is by commencement of an action pursuant to the provisions of Article 2 of Chapter 21 of Title 50 of the Official Code of Georgia Annotated.

(2) In the event that a Patient requires Emergency Care, the form referenced in subsection (1) of this Rule must either be signed by the Patient's legal representative, or if such person is unavailable, the Patient must receive and execute the acknowledgment within forty-eight hours after the Patient has the mental capacity to consent to the Emergency Care. If the Patient or Patient's legal representative refuses to consent to the Emergency Care after

such care has been provided, the Department may terminate the Patient's right to further participate in the Program.

Cite as Ga. Comp. R. & Regs. R. 511-7-1-.09
Authority: O.C.G.A. Secs. 31-2A-6, 31-8-200.
History. Original Rule entitled "Notice Requirements" adopted. F. Sep. 20, 2013; eff. Oct. 10, 2013.

Rule 511-7-1-.10. Patient Records.

(1) Each Health Care Provider shall maintain a current and complete Patient Record of each Patient that receives Health Care.

(2) The Health Care Provider shall maintain a record retention system that enables the proper documentation, completion, and preservation of the Patient Records of Patients who receive Health Care under the Program.

(3) Health Care Providers shall retain Patient Records for a period of at least ten years following the date of death or discharge. For pediatric patients, the records shall be retained for five years after the Patient reaches the age of majority.

(4) Patient Records shall be available for inspection only by the Health Care Provider, his or her professional staff, the Patient, representatives of the Department acting in an official capacity, DHR, DOAS, Health and Human Services, the State Attorney General, State Health Care Fraud Control Unit, applicable licensing boards, or other persons authorized in writing by the Patient to have access to the Patient Records. Patient Records requested by the Department shall be produced in accordance with Rule 511-7-1-.08(1) immediately for on-site review or sent to the Department by mail within fourteen calendar days following a request.

(5) The Health Care Provider shall release copies of all or part of a Patient Record to the Patient or to others with the written consent of the Patient or the Patient's legal guardian and to parties when required by applicable state and/or federal law. The Health Care Provider may charge a reasonable fee for the copies produced as allowable under O.C.G.A. Section 31-33-2.

(6) The Patient Record for each Patient shall contain at a minimum:

(a) Patient identifying information (name, address, age, sex, marital status, emergency contact);

(b) Department financial eligibility and patient referral forms;

(c) Name of Health Care Provider(s);

(d) Patient allergies;

(e) Diagnosis of the Patient's condition;

(f) Reports from diagnostic testing;

(g) Physician orders;

(h) Documentation that the Patient has consented to the Health Care, as well as the signed acknowledgment required by Rule 511-7-1.09; and

(i) Information justifying the treatment or procedure provided and a report of outcomes of treatment or procedures.

(7) All entries in the Patient Records shall be permanent, accurate, dated with the actual date of entry, and signed by the individual making the entry.

(8) Patient Records shall be completed within thirty days after Health Care has been provided to the Patient.

(9) Health Care Providers must comply with the requirements set forth in the Health Insurance Portability and Accountability Act of 1996 with respect to the handling of Patient Records, as well as with any other applicable federal and state laws and rules and regulations.

Cite as Ga. Comp. R. & Regs. R. 511-7-1-.10
Authority: O.C.G.A. Secs. 31-2A-6, 31-8-200.
History. Original Rule entitled "Patient Records" adopted. F. Sep. 20, 2013; eff. Oct. 10, 2013.

Rule 511-7-1-.11. Sovereign Immunity.

(1) To the extent that a Health Care Provider has provided Health Care within the scope of services identified in the Contract between the Health Care Provider and the Department allowing the Health Care Provider to participate in the Program, the Health Care Provider shall be considered a state officer or employee, and therefore immune from liability and suit pursuant to O.C.G.A. Section 50-21-.25.

(2) To the extent that a Volunteer has assisted a Health Care Provider, acting within the scope of services identified in the Contract between the Volunteer and the Department allowing the Volunteer to participate in the Program, the Volunteer shall be considered a state officer or employee and therefore shall be immune from liability and suit pursuant to O.C.G.A. Section 50-21-25.

(3) Notwithstanding the provisions of this Rule, Health Care Providers and Volunteers shall not be subject to any provisions of Georgia law with respect to state employment,

collective bargaining, hours of work, rates of compensation, unemployment compensation, leave time, or employee benefits.

Cite as Ga. Comp. R. & Regs. R. 511-7-1-.11
Authority: O.C.G.A. Secs. 31-2A-6, 31-8-200. 50-21-22, 50-21-25.
History. Original Rule entitled "Sovereign Immunity" adopted. F. Sep. 20, 2013; eff. Oct. 10, 2013.

Rule 511-7-1-.12. Legal Actions.

(1) In the event that a Patient suffers an injury as a result of the Health Care he or she has received from a Health Care Provider and desires to seek a legal remedy, he or she must comply with the provisions of O.C.G.A. Section 50-21-26.

(2) If at any time it is determined that a Health Care Provider caused an injury to a Patient by or through an act or omission that is outside of the scope of services defined in the Contract between the Department and the Health Care Provider, the Patient must seek his or her remedies under general tort law or any other applicable law.

Cite as Ga. Comp. R. & Regs. R. 511-7-1-.12
Authority: O.C.G.A. Secs. 31-2A-6, 31-8-200, 50-21-26.
History. Original Rule entitled "Legal Actions" adopted. F. Sep. 20, 2013; eff. Oct. 10, 2013.

Rule 511-7-1-.13. Complaints.

(1) All complaints regarding a Health Care Provider or a Volunteer which do not contemplate formal legal action as described in Rule 511-7-1-.12 must be submitted to the Department by certified mail or personal delivery. Complaints may involve, but are not restricted to, the following issues:

   (a) Privacy and confidentiality violations; and

   (b) Discrimination on the basis of race, color, age, sex, sexual orientation, marital status, religion, physical or mental disability, national origin, pregnancy, or any other protected bases with regard to the provision of Health Care.

(2) The complainant shall sign a sworn statement indicating the nature of the complaint, the date on which the event giving rise to the complaint occurred, the identity of the complainant, and witnesses, if any.

(3) Within thirty days' receipt of the complaint, the Department shall conduct an informal investigation utilizing the facts submitted by the complainant, as well as any other independent, verifiable information available, and shall submit a written response to the complainant on its findings and recommendations.

Cite as Ga. Comp. R. & Regs. R. 511-7-1-.13
Authority: O.C.G.A. Secs. 31-2A-6, 31-8-200.
History. Original Rule entitled "Complaints" adopted. F. Sep. 20, 2013; eff. Oct. 10, 2013.

Rule 511-7-1-.14. Department Reports.

(1) The Department shall submit, by January 1 of each year, an annual report with a reporting period of July 1 through June 30 of the preceding year, to the President of the Senate, the Speaker of the House of Representatives, the minority leaders of each house, and chairpersons of the House Health and Human Services Committee, and the Senate Health and Human Services Committee providing the following:

(a) The number of participating Health Care Providers in the Program;

(b) The number of Patient encounters;

(c) The value of the Health Care and Emergency Care rendered;

(d) The value of any grants or donations of Goods and Services received by the Health Care Provider, and utilized in providing Health Care to Patients;

(e) A report of all claims including the number and total of all claims pending and paid as reported to the Department by the DOAS;

(f) The costs associated with the defense of claims brought against providers as reported to the Department by the DOAS;

(2) The Department shall, on an annual basis, report to the DOAS the number and type of Health Care Providers that participated in the Program.

Cite as Ga. Comp. R. & Regs. R. 511-7-1-.14
Authority: O.C.G.A. Secs. 31-2A-6, 31-8-200.
History. Original Rule entitled "Department Reports" adopted. F. Sep. 20, 2013; eff. Oct. 10, 2013

Subject 511-7-2. PRESCRIPTION DRUG MONITORING PROGRAM.

Rule 511-7-2-.01. Definitions.

(1) "Delegate" means an individual designated by a prescriber or dispenser, and meeting all the requirements of DPH Rule 511-7-2-.04, who is authorized to access the PDMP for the purpose of reviewing a patient's prescription information.

(2) "Department" means the Georgia Department of Public Health.

(3) "Dispenser" means a person licensed under the laws of this state, or any other state or territory of the United States, to dispense or deliver a Schedule II, III, IV, or V controlled substance to an ultimate user in this state, but does not include (a) a pharmacy licensed as a hospital pharmacy by the State Board of Pharmacy pursuant to Code Section 26-4-110; (b) an institutional pharmacy that serves only a health care facility, including but not limited to a nursing home, an intermediate care home, a personal care home, or a hospice program, which provides patient care and which pharmacy dispenses such substances to be administered and used by a patient on the premises of the facility; (c) a licensed health care practitioner or other authorized person who administers such a substance; or (d) a pharmacy operated by, or on behalf of, or under contract with the Department of Corrections for the sole and exclusive purpose of providing services in a secure environment to prisoners within a penal institution, penitentiary, prison, detention center, or other secure correctional institution, including correctional institutions operated by private entities in this state which house inmates under authority of the Department of Corrections.

(4) "PDMP" means the Prescription Drug Monitoring Program database authorized by Code Section 16-13-57 and maintained by the department.

(5) "Prescriber" means a physician, dentist, scientific investigator, or other person licensed, registered, or otherwise authorized under the laws of this state, or any other state or territory of the United States, to prescribe a controlled substance in the course of professional practice or research in this state, and who has been assigned a DEA number. "Prescriber" shall not include a veterinarian.

(6) "Prescription information" means all of the following:

(a) DEA permit number or approved dispenser facility controlled substance identification number;

(b) Date the prescription was dispensed;

(c) Prescription serial number;

(d) If the prescription is new or a refill;

(e) National Drug Code (NDC) for drug dispensed;

(f) Quantity and strength dispensed;

(g) Number of days' supply of the drug;

(h) Patient's name;

(i) Patient's address;

(j) Patient's date of birth;

(k) Patient gender;

(l) Method of payment;

(m) Approved prescriber identification number or prescriber's DEA permit number; and

(n) Date the prescription was issued by the prescriber.

Cite as Ga. Comp. R. & Regs. R. 511-7-2-.01
Authority: O.C.G.A. §§ 31-2A-6, 31-5-5, 16-13-57 through 16-13-65.
History. Original Rule entitled "Definitions" adopted. F. Oct. 6, 2017; eff. Oct. 26, 2017.

Rule 511-7-2-.02. Internet access to the Prescription Drug Monitoring Program database (PDMP).

(1) Prescribers and dispensers are eligible to request approval for internet access to the PDMP.

(2) Prescribers and dispensers approved for internet access to the PDMP database may delegate their authority to use that access only as permitted in DPH Rule 511-7-2-.04.

(3) Prescribers and dispensers shall use information obtained from the PDMP database solely to make treatment decisions about their patients, to communicate concerns about a patient's potential usage, misuse, abuse or underutilization of a controlled substance to prescribers or dispensers involved in the patient's care, or to report potential violations of Title 16, Chapter 13, Article 2 to the Georgia Drugs and Narcotics Agency.

Cite as Ga. Comp. R. & Regs. R. 511-7-2-.02
Authority: O.C.G.A. §§ 31-2A-6, 31-5-5, 16-13-57 through 16-13-65.
History. Original Rule entitled "Internet access to the Prescription Drug Monitoring Program database (PDMP)" adopted. F. Oct. 6, 2017; eff. Oct. 26, 2017.

Rule 511-7-2-.03. Obligation of dispensers to transmit prescription information to the PDMP.

A dispenser shall transmit prescription information electronically to the PDMP database for each prescription dispensed in Georgia for a Schedule II, III, IV, or V controlled substance. Prescription information shall be transmitted no more than 24 hours after the prescription is dispensed. If no prescriptions are dispensed within a 24 hour period, then a report shall be made indicating that fact.

Cite as Ga. Comp. R. & Regs. R. 511-7-2-.03
Authority: O.C.G.A. §§ 31-2A-6, 31-5-5, 16-13-57 through 16-13-65.
History. Original Rule entitled "Obligation of dispensers to transmit prescription information to the PDMP" adopted. F. Oct. 6, 2017; eff. Oct. 26, 2017.

Rule 511-7-2-.04. Delegates.

(1) Subject to the requirements of this Rule, a prescriber or dispenser approved for internet access to the PDMP may designate up to two individuals per shift or rotation to access the PDMP on their behalf as delegates, provided that such individuals are:

(a) Members of the prescriber's or dispenser's staff;

(b) Employed by the health care facility in which the prescriber practices, and approved by the medical director of such health care facility; or

(c) Employed by the emergency department of the hospital in which the prescriber practices, and approved by the medical director of such hospital.

(2) To be eligible to serve as a delegate, an individual must:

(a) Hold a current license as a dentist, dental hygienist, optometrist, physician, physician assistant, or podiatrist under Title 43 of the Official Code of Georgia;

(b) Hold a current license as a pharmacist or pharmacist intern or registered as a pharmacist technician under Title 26 of the Official Code of Georgia; or

(c) Comply with the requirements of subsection (4) of this Rule.

(3) An individual shall be ineligible to become a delegate if that person has been convicted of a felony, or of any criminal offense involving illegal drug use, possession, trafficking, or sale. "Convicted" as used in this subsection includes a plea of guilty or *nolo contendere*, but does not include a conviction that has been exonerated and discharged pursuant to Title 42, Chapter 8, Article 3 of the Official Code of Georgia or pardoned.

(4) Before an individual may act as a delegate, the delegating person or entity must:

(a) Ensure that the proposed delegate has taken the department's online training course entitled "The Georgia Prescription Drug Monitoring Database: Understanding Your Responsibilities" and passed the online test with a score of at least 70:

(b) Instructed in the prescriber or dispenser's security policies pertaining to the PDMP; and

(c) Obtain a signed Responsibility Statement from the proposed delegate and place it in the delegate's personnel file.

(5) A delegating person or entity shall maintain records documenting the delegate's completion of the online PDMP training, the execution of the Responsibility Statement, the date on which each delegate was granted access to the PDMP, and the date on which the delegate's access was terminated. Those records shall be made available for inspection by the department.

(6) A delegate may access the PDMP only for the purpose of providing medical or pharmaceutical care to a specific patient of the delegating prescriber or dispenser, or to inform the delegating person or entity of a patient's potential use, misuse, abuse, or underutilization of prescribed medication.

Cite as Ga. Comp. R. & Regs. R. 511-7-2-.04
Authority: O.C.G.A. §§ 31-2A-6, 31-5-5, 16-13-57 through 16-13-65.
History. Original Rule entitled "Delegates" adopted. F. Oct. 6, 2017; eff. Oct. 26, 2017.
Amended: F. June 19, 2018; eff. July 9, 2018.

Rule 511-7-2-.05. Dispenser claims for hardship waiver.

A dispenser may submit a written request for a hardship waiver from the requirement that it transmit prescription information within 24 hours by electronic means as required by paragraphs (a) and (b) of Code Section 16-13-59. The request must explain in detail the nature of the hardship, and propose an alternative method whereby the dispenser will report all prescription information within 24 hours. No request for a waiver will be approved without sufficient proof that compliance would impose an undue hardship upon the dispenser, meaning that it lacks sufficient financial resources to arrange for electronic transmission on its own or by arrangement with a third party.

Cite as Ga. Comp. R. & Regs. R. 511-7-2-.05
Authority: O.C.G.A. §§ 31-2A-6, 31-5-5, 16-13-57 through 16-13-65.
History. Original Rule entitled "Dispenser claims for hardship waiver" adopted. F. Oct. 6, 2017; eff. Oct. 26, 2017.

Rule 511-7-2-.06. Duty of prescribers and dispensers to safeguard information obtained from the PDMP.

(1) All prescribers and dispensers authorized to have internet access to the PDMP shall protect prescription information obtained from the PDMP in accordance with the federal regulations implementing the Health Insurance Portability and Accountability Act (HIPAA) and the Health Information Technology for Economic and Clinical Health (HITECH Act) as they may be amended from time to time. Prescription information obtained from the PDMP may be included in the patient's chart.

(2) All prescribers and dispensers authorized to have internet access to the PDMP shall follow written policies governing access to the PDMP, the recording and use of

prescription information obtained from the PDMP, and the protection of any written or electronic records in which prescription information is recorded.

(3) All prescribers and dispensers authorized to have internet access to the PDMP shall review DPH Form 7207 "Guide To The Georgia Prescription Drug Monitoring Database" and sign DPH Form 7207-A "Responsibility Statement."

Cite as Ga. Comp. R. & Regs. R. 511-7-2-.06
Authority: O.C.G.A. §§ 31-2A-6, 31-5-5, 16-13-57 through 16-13-65.
History. Original Rule entitled "Duty of prescribers and dispensers to safeguard information obtained from the PDMP" adopted. F. Oct. 6, 2017; eff. Oct. 26, 2017.

Rule 511-7-2-.07. Requests for prescription data held in the PDMP.

(1) This regulation is intended to govern all requests for prescription data from the PDMP other than queries for particular patients made by prescribers, dispensers, or their delegates. Except as provided in this Chapter or by law, prescription information held in the PDMP database is confidential and will not be disclosed by the department.

(2) The following persons may request information contained in the PDMP, for the purposes identified below, and in the manner set forth below:

(a) Local or state law enforcement or prosecutorial officials, pursuant to a search warrant issued by an appropriate court or official for the jurisdiction in which the office of such law enforcement or prosecutorial officials is located;

(b) Federal law enforcement or prosecutorial officials, pursuant to a search warrant issued pursuant to Title 21 of the United States Code, a grand jury subpoena issued pursuant to Title 18 of the United States Code, an administrative subpoena, or a civil investigative demand;

(c) The Georgia Drugs and Narcotics Agency, for health oversight purposes, or upon presentation of a subpoena issued by or on behalf of that agency, or as part of an investigation into suspected or reported abuses or regarding illegal access to the PDMP database;

(d) The Georgia Composite Medical Board, for health oversight purposes, or upon presentation of a subpoena issued by or on behalf of such board;

(e) The Georgia Board of Pharmacy, for health oversight purposes, or upon presentation of a subpoena issued by or on behalf of such board;

(f) The Georgia Department of Community Health, for oversight of the state Medicaid program, or upon presentation of a subpoena issued by or on behalf of that agency;

(g) The Georgia Board of Nursing, for health oversight purposes, or upon presentation of a subpoena issued by or on behalf of such board;

(h) The federal Centers for Medicare and Medicaid Services, upon presentation of a subpoena issued by or on behalf of that agency;

(i) An individual whose prescription history appears in the PDMP is entitled to a copy of that history, upon written request made by that person or their attorney;

(j) A prescriber is entitled to a copy of prescription information in the PDMP which pertains to prescriptions written by that person, upon written request made by that prescriber or their attorney;

(k) A dispenser is entitled to a copy of prescription information in the PDMP which pertains to prescriptions dispensed by that person, upon written request made by that dispenser or their attorney;

(l) A prescription drug monitoring program operated by a government entity in another state, or an electronic medical records system operated by a prescriber or health care facility, provided that the program or system has been determined by DPH to contain legal, administrative, technical, and physical safeguards that meet or exceed the security measures employed by DPH in the operation of the PDMP.

(m) Persons or entities may request prescription information for purposes of statistics, education, instruction, drug abuse prevention, or scientific research; provided, however, that such data will first be de-identified according to the standards set forth in 45 C.F.R. 164.514 as it may be amended from time to time.

(3) Requests for data made pursuant to subsections (a) through (l) of this Rule shall be submitted to the Director of the DPH Office of Drug Misuse Evaluation in writing or through a dedicated email address set up by the department for that purpose. Requests for data made pursuant to subsection (l) of this Rule shall be made through the department's Public Health Information Portal (PHIP).

Cite as Ga. Comp. R. & Regs. R. 511-7-2-.07
Authority: O.C.G.A. §§ 31-2A-6, 31-5-5, 16-13-57 through 16-13-65.
History. Original Rule entitled "Requests for prescription data held in the PDMP" adopted. F. Oct. 6, 2017; eff. Oct. 26, 2017.
Amended: F. June 19, 2018; eff. July 9, 2018.

Rule 511-7-2-.08. De-identification of prescription information held in the PDMP for more than two years.

Prescription information entered into the PDMP shall be de-identified two years from the date such information was transmitted to the database by the dispenser. De-identification shall be

conducted according to the standards set forth in 45 C.F.R. 164.514 as it may be amended from time to time.

Cite as Ga. Comp. R. & Regs. R. 511-7-2-.08
Authority: O.C.G.A. §§ 31-2A-6, 31-5-5, 16-13-57 through 16-13-65.
History. Original Rule entitled "De-identification of prescription information held in the PDMP for more than two years" adopted. F. Oct. 6, 2017; eff. Oct. 26, 2017.

Chapter 511-8. SPECIAL SUPPLEMENTAL NUTRITIONAL PROGRAM FOR WOMEN, INFANTS, AND CHILDREN (WIC).

Subject 511-8-1. The Special Supplemental Nutrition Program for Women, Infants and Children (WIC).

Rule 511-8-1-.01. Legal Authority.

These rules are adopted and published pursuant to Section 17 of the Child Nutrition Act of 1966, as amended.

Cite as Ga. Comp. R. & Regs. R. 511-8-1-.01
Authority: 42 U.S.C. § 1786; 7 C.F.R. § 246; O.C.G.A. §§ 31-2A-6(a), 31-5-1.
History. Original Rule entitled "Legal Authority" adopted. F. Jan. 4, 2012; eff. Jan. 24, 2012.

Rule 511-8-1-.02. Title and Purpose.

These rules shall be known as the Administrative Rules for the Special Supplemental Nutrition Program for Women, Infants and Children (Georgia WIC). The purpose of these rules is to provide for the administration of Georgia WIC as set forth by the Child Nutrition Act of 1966, as amended, and the Code of Federal Regulations.

Cite as Ga. Comp. R. & Regs. R. 511-8-1-.02
Authority: 42 U.S.C. § 1786; 7 C.F.R. § 246; O.C.G.A. §§ 31-2A-6(a), 31-5-1.
History. Original Rule entitled "Title and Purpose" adopted. F. Jan. 4, 2012; eff. Jan. 24, 2012.

Rule 511-8-1-.03. Definitions.

(a) "Adverse action" means an action taken by the State agency, and which is subject to full or abbreviated administrative review as provided by 7 C.F.R. § 246.18(a)(1)(i)(ii), as a result of a vendor violation of the Georgia WIC rules and regulations.

(b) "Days" means calendar days.

(c) "Department" means the U.S. Department of Agriculture.

(d) "FNS" means the Food and Nutrition Service of the U.S. Department of Agriculture.

(e) "Food delivery system" means the method used by State and local agencies to provide supplemental foods to participants.

(f) "State" means the state of Georgia.

(g) "State agency" means the Georgia Department of Public Health.

(h) "State Plan" means the Georgia WIC plan of operation and administration that describes the manner in which the State agency intends to implement and operate all aspects of Georgia WIC.

(i) "Vendor" means a sole proprietorship, partnership, cooperative association, corporation, or other business entity operating one or more stores authorized by the State agency to provide authorized supplemental foods to participants under a retail food delivery system. Each store operated by a business entity constitutes a separate vendor and must be authorized separately from other stores operated by the business entity. Each store must have a single, fixed location, except when the authorization of mobile stores is necessary to meet the special needs described in the Georgia WIC State Plan of operation.

(j) "Vendor authorization" means the process by which the State agency assesses, selects, and enters into agreements with stores that apply or subsequently reapply to be authorized as vendors.

(k) "Farmer" means any individual authorized by the state agency to participant in the Georgia Farmers' Market Nutrition Program, for the purpose of providing fresh, unprepared fruits, vegetables and herbs to WIC participants, or the Senior Farmers' Market Nutrition Program, for the purpose of providing low-income seniors with fresh, unprepared fruits, vegetables, and herbs, at designated market sites.

(l) "Farmer Authorization" means the process by which the State agency assesses, selects, and enters into agreements with farmers that apply or subsequently reapply to be authorized as vendors.

Cite as Ga. Comp. R. & Regs. R. 511-8-1-.03
Authority: 42 U.S.C. § 1786; 7 C.F.R. Parts 246, 248, 249; O.C.G.A. §§ 31-2A-6, 31-5-1.
History. Original Rule entitled "Definitions" adopted. F. Jan. 4, 2012; eff. Jan. 24, 2012.
Amended: F. Oct. 30, 2018; eff. Nov. 11, 2018, as specified by the Agency.

Rule 511-8-1-.04. Purpose and Administration.

(1) **Purpose**. The Special Supplemental Nutrition Program for Women, Infants and Children follows from the Child Nutrition Act of 1966 which states, in part, that the Congress finds that substantial numbers of pregnant, postpartum and breastfeeding women, infants and young children from families with inadequate income are at special risk with respect to their physical and mental health by reason of inadequate nutrition or health care, or both. The purpose of Georgia WIC is to:

(a) provide supplemental foods, and nutrition education and counseling through payment of cash grants to State agencies which administer Georgia WIC through local agencies at no cost to eligible persons;

(b) serve as an adjunct to good health care during critical times of growth and development, in order to prevent the occurrence of health problems, including drug and other harmful substance abuse, and to improve the health status of these persons; and

(c) supplement the Supplemental Nutrition Assistance Program (SNAP) and any program under which foods are distributed to needy families in lieu of food stamps and receipt of food or meals from soup kitchens, or shelters or other forms of emergency food assistance.

(2) **Administration of State Plan.** The State agency shall administer the Georgia WIC State Plan of operation in accordance with these Rules and all relevant Federal and State law, rules and regulations, and policies and procedures governing Georgia WIC.

(3) **Policies, Guidelines and Manuals**. The State agency shall promulgate policies, guidelines and manuals to facilitate operation of Georgia WIC in accordance with the agreement with the Department, the guidelines and instructions issued by the Department and FNS in policy letters and management evaluations, and the Georgia WIC State Plan of operation and the rules contained in this Subchapter.

Cite as Ga. Comp. R. & Regs. R. 511-8-1-.04
Authority: 42 U.S.C. § 1786; 7 C.F.R. § 246.1 and 246.3; O.C.G.A. §§31-2A-6(a), 31-5-1.
History. Original Rule entitled "Purpose and Administration" adopted. F. Jan. 4, 2012; eff. Jan. 24, 2012.

Rule 511-8-1-.05. Vendor and Farmer Terms and Conditions.

(a) The State agency shall publish the terms and conditions for vendor authorization and participation under the Georgia WIC State Plan of operation through the Georgia WIC Procedures Manual, the Vendor Agreement, and Georgia WIC Vendor Handbook. A copy of the Georgia WIC Vendor Handbook containing the terms and conditions for vendor authorization and participation shall be made available to each authorized vendor. Such terms and conditions may be amended from time to time when Georgia WIC finds it necessary or appropriate to do so. All such amendments shall be made available to vendors at the addresses provided by the vendors to Georgia WIC. Vendors are required

to abide by the provisions of the current Vendor Handbook, as amended, including the sanction system outlined therein. Vendors will be subject to sanctions for program violations in accordance with the version of the handbook and all amendments in effect at the time the violation occurs. Amended terms and conditions shall be effective as specified by Georgia WIC at the time of publication.

(b) The State agency shall publish the terms and conditions for farmer authorization and participation in the Georgia WIC Farmers' Market Nutrition Program and the Senior Farmers' Market Nutrition Program under the Georgia WIC State Plan of operation through the Georgia WIC Procedures Manual, the Farmer Agreement, and the Georgia WIC Farmer Handbook. A copy of the Georgia WIC Farmer Handbook containing the terms and conditions for farmer authorization and participation shall be made available to each authorized farmer. Such terms and conditions may be amended from time to time when Georgia WIC finds it necessary or appropriate to do so. All such amendments shall be made available to farmers at the addresses provided by the farmers to Georgia WIC. Farmers are required to abide by the provisions of the current Farmer Handbook, as amended, including the sanction system outlined therein. Farmers will be subject to sanctions for program violations in accordance with the version of the handbook and all amendments in effect at the time the violation occurs. Amended terms and conditions shall be effective as specified by Georgia WIC at the time of publication.

Cite as Ga. Comp. R. & Regs. R. 511-8-1-.05
Authority: 42 U.S.C. § 1786; 7 C.F.R. §§ 246.1, 246.3, 248.1, 248.3, 249.1, 249.3; O.C.G.A. §§31-2A-6, 31-5-1.
History. Original Rule entitled "Vendor Terms and Conditions" adopted. F. Jan. 4, 2012; eff. Jan. 24, 2012.
Amended: New title "Vendor and Farmer Terms and Conditions." F. Oct. 30, 2018; eff. Nov. 11, 2018, as specified by the Agency.

Rule 511-8-1-.06. Procedures for Vendor and Farmer Administrative Review, Hearings and Appeals.

(a) **Intent.** It is the intent of this regulation to comply with the requirements of 7 C.F.R. § 246.18, 7 C.F.R. § 248.16, and 7 C.F.R. § 249.16 while following the existing procedures of the Georgia Administrative Procedure Act, O.C.G.A. § 50-13-1*et seq.*, and specifically O.C.G.A. § 50-13-41, in cases entitled to full administrative review; and to provide for the prompt, fair, and efficient internal review of cases entitled to abbreviated administrative review in accordance with the requirements of 7 C.F.R. § 246.18, 7 C.F.R. § 248.16, and 7 C.F.R. § 249.16.

(b) **Administrative Review Procedures for Vendors**

(1) **Full Administrative Review**

(A) The following adverse actions shall be subject to full administrative review upon timely request by the vendor:

(i) Denial of authorization based on the application of the vendor selection criteria for minimum variety and quantity of authorized supplemental foods, or on a determination that the vendor is operating a store sold by its previous owner in an attempt to circumvent a sanction, as stated in 7 C.F.R. § 246.12(g)(7);

(ii) Termination of an agreement for cause;

(iii) Disqualification; and

(iv) Imposition of a fine or a civil money penalty in lieu of disqualification.

(B) These procedures shall be followed in cases meriting full administrative review:

(i) The State agency shall give written notice to the vendor of the adverse action, the procedures to follow to obtain full administrative review, the causes for and the effective date of the action. When a vendor is disqualified due in whole or in part for any of the violations listed in 7 C.F.R § 246.12(l)(1), the notice shall include the following statement: "This disqualification from WIC may result in disqualification as a retailer in SNAP. Such disqualification is not subject to administrative or judicial review under SNAP."

(ii) A vendor seeking review must send a written request for review to the Commissioner of the State agency within fifteen days from the date of the notice of adverse action, with a copy of the decision to be reviewed;

(iii) Upon receiving a timely request for review, the Commissioner shall refer the case to the Office of State Administrative Hearings (OSAH) for decision within a reasonable period of time, not to exceed thirty (30) days after receipt of such request.

(iv) The hearing before OSAH shall be conducted in accordance with the Georgia Administrative Procedure Act and the rules of OSAH. In addition, the Administrative Law Judge (ALJ) shall ensure that the vendor is given:

(I) Adequate advance notice of the time and place of the administrative review to provide all parties involved sufficient time to prepare for the review;

(II) The opportunity to present its case and at least one opportunity to reschedule the administrative review date upon specific request;

(III) The opportunity to cross-examine adverse witnesses. When necessary to protect the identity of WIC Program investigators, such examination may be conducted behind a protective screen or other device to conceal the investigator's face and body;

(IV) The opportunity to be represented by counsel; and

(V) The opportunity to examine prior to the hearing the evidence upon which the State agency's action is based.

(v) The ALJ's determination shall be based solely on whether the State agency has correctly applied Federal and State statutes, regulations, policies, and procedures governing the WIC Program, according to the evidence presented at the review.

(vi) Within 30 days after the close of the record, an ALJ shall issue a decision to all parties in the case, except when it is determined that the complexity of the issues and the length of the record require an extension of this period and an order is issued by an ALJ so providing.

(vii) Every decision of an ALJ shall be a final decision. Any aggrieved party, including the state agency, may seek judicial review of an ALJ's final decision.

(2) **Abbreviated Administrative Review**

(A) The following adverse actions shall be subject to abbreviated administrative review upon timely request by the vendor:

(i) Denial of authorization based on the vendor selection criteria for business integrity or for a current SNAP disqualification or civil money penalty for hardship;

(ii) Denial of authorization based on the application of the vendor selection criteria for competitive price;

(iii) The application of the State agency's vendor peer group criteria and the criteria used to identify vendors that are above-50-percent vendors or comparable to above-50-percent vendors;

(iv) Denial of authorization based on a State agency-established vendor selection criterion if the basis of the denial is a WIC vendor sanction or a SNAP withdrawal of authorization or disqualification;

(v) Denial of authorization based on the State agency's vendor limiting criteria;

(vi) Denial of authorization because a vendor submitted its application outside the timeframes during which applications are being accepted and processed as established by the State agency;

(vii) Termination of an agreement because of a change in ownership or location or cessation of operations;

(viii) Disqualification based on a trafficking conviction;

(ix) Disqualification based on the imposition of a SNAP civil money penalty for hardship;

(x) Disqualification or a civil money penalty imposed in lieu of disqualification based on a mandatory sanction imposed by another WIC State agency;

(xi) A civil money penalty imposed in lieu of disqualification based on a SNAP disqualification; and

(xii) Denial of an application based on a determination of whether an applicant vendor is currently authorized by SNAP.

(B) These procedures shall be followed in cases meriting abbreviated administrative review:

(i) The State agency shall give written notice to the vendor of the adverse action, the procedures to follow to obtain an abbreviated administrative review, the causes for and the effective date of the action;

(ii) A vendor seeking review must send a written request for review to the Commissioner of the State agency within fifteen days from the date of the notice of adverse action, with a copy of the decision to

be reviewed and any documents, argument, or information that the vendor contends would justify reversal;

(iii) Upon receiving a timely request for review, the Commissioner shall appoint a decision-maker who is someone other than the person who rendered the decision on the action to review the information provided to the vendor concerning the causes for the adverse action and the vendor's response, and to make a determination based solely on whether the State agency has correctly applied Federal and State statutes, regulations, policies, and procedures governing the Program;

(iv) The decision-maker shall provide written notification of the final agency decision, including the basis for the decision, and the vendor's right to seek judicial review pursuant to O.C.G.A. § 50-13-19, within 90 days of the date of receipt of the request for an administrative review. If the adverse action under review has not already taken effect, the decision-maker's ruling shall be effective on the date of receipt by the vendor.

(3) **Actions not Subject to Administrative Review**

(A) The following adverse actions are not subject to administrative review:

(i) The validity or appropriateness of the State agency's vendor limiting criteria or vendor selection criteria for minimum variety and quantity of supplemental foods, business integrity, and current SNAP disqualification or civil money penalty for hardship;

(ii) The validity or appropriateness of the State agency's selection criteria for competitive price, including, but not limited to, vendor peer group criteria and the criteria used to identify vendors that are above-50-percent vendors or comparable to above-50-percent vendors;

(iii) The validity or appropriateness of the State agency's participant access criteria and the State agency's participant access determinations;

(iv) The State agency's determination to include or exclude an infant formula manufacturer, wholesaler, distributor, or retailer from the list required pursuant to §246.12(g)(11);

(v) The validity or appropriateness of the State agency's prohibition of incentive items and the State agency's denial of an above-50-percent vendor's request to provide an incentive item to customers pursuant to §246.12(h)(8);

(vi) The State agency's determination whether to notify a vendor in writing when an investigation reveals an initial violation for which a pattern of violations must be established in order to impose a sanction, pursuant to §246.12(l)(3);

(vii) The State agency's determination whether a vendor had an effective policy and program in effect to prevent trafficking and that the ownership of the vendor was not aware of, did not approve of, and was not involved in the conduct of the violation;

(viii) Denial of authorization if the State agency's vendor authorization is subject to the procurement procedures applicable to the State agency;

(viiii) The expiration of a vendor's agreement;

(x) Disputes regarding food instrument or cash-value voucher payments and vendor claims (other than the opportunity to justify or correct a vendor overcharge or other error, as permitted by §246.12(k)(3); and

(xi) Disqualification of a vendor as a result of disqualification from SNAP.

(c) **Administrative Review Procedures for Farmers**

1) **Full Administrative Review**

(A) The following adverse actions shall be subject to full administrative review upon timely request by the farmer:

(i) Denial of authorization based on the application of the farmer selection criteria;

(ii) Termination of an agreement for cause;

(iii) Sanction by the State agency; and

(iv) Disqualification.

(B) These procedures shall be followed in cases meriting full administrative review:

(i) The state agency shall provide the farmer with written notification of the adverse action, the cause(s) for the action, and the effective date of the action, including the State agency's determination of whether the action shall be postponed if it is appealed, in accordance with 7 C.F.R. § 248.16(b) and 7 C.F.R. § 249.16(c), and the opportunity for a hearing;

(ii) A farmer seeking review must send a written request for review to the Commissioner of the State agency within forty-five (45) days from the date of the notice of adverse action;

(iii) Upon receiving a timely request for review, the Commissioner shall refer the case to the Office of State Administrative Hearings (OSAH) for decision within a reasonable period of time, not to exceed thirty (30) days after receipt of such request.

(iv) The hearing before OSAH shall be conducted in accordance with the Georgia Administrative Procedure Act and the rules of OSAH. In addition, the Administrative Law Judge (ALJ) shall ensure that the farmer is given:

(I) The opportunity to appeal the action within the time specified by the State agency in its notification of adverse action;

(II) Adequate advance notice of the time and place of the hearing to provide all parties involved sufficient time to prepare for the hearing;

(III) The opportunity to present its case and at least one opportunity to reschedule the hearing date upon specific request;

(IV) The opportunity to confront and cross-examine adverse witnesses. When necessary to protect the identity of WIC Program investigators, such examination may be conducted behind a protective screen or other device to conceal the investigator's face and body;

(V) The opportunity to be represented by counsel, if desired; and

(VI) The opportunity to review the case record prior to the hearing.

(v) The ALJ's determination shall be based solely on whether the State agency has correctly applied Federal and State statutes, regulations, policies, and procedures governing the WIC Program, according to the evidence presented at the review.

(vi) Within 30 days after the close of the record, an ALJ shall issue a decision to all parties in the case, except when it is determined that the complexity of the issues and the length of the record require an extension of this period and an order is issued by an ALJ so providing.

(vii) Every decision of an ALJ shall be a final decision. Any aggrieved party, including the agency, may seek judicial review of an ALJ's final decision.

(2) **Actions not Subject to Administrative Review**

(A) The following adverse actions are not subject to administrative review: Expiration of a contract or agreement with a farmer, farmers' market, or roadside stand.

Cite as Ga. Comp. R. & Regs. R. 511-8-1-.06
Authority: 42 U.S.C. § 1786; 7 C.F.R. §§ 246.18, 248.16, 249.16; **O.C.G.A. §§** 31-2A-6, 31-5-1, 50-13-41.
History. Original Rule entitled "Procedures for Vendor Administrative Review, Hearings and Appeals" adopted. F. Jan. 4, 2012; eff. Jan. 24, 2012.
Amended: New title "Procedures for Vendor and Farmer Administrative Review, Hearings and Appeals." F. Oct. 30, 2018; eff. Nov. 11, 2018, as specified by the Agency.

Chapter 511-9. EMERGENCY PREPAREDNESS.

Subject 511-9-1. ISOLATION AND QUARANTINE.

Rule 511-9-1-.01. Scope and Purpose.

(1) These regulations are enacted pursuant to Title 31 and Title 38 of the Georgia Code, and apply to the exercise of authority by the Department and local county boards of health to order measures necessary to prevent the spread of communicable diseases or conditions likely to endanger the public health.

(2) The purpose of this Chapter is to ensure uniform and coordinated efforts to prevent or respond to a potential public health emergency through the implementation of public health control measures, and to protect the rights of individuals who may be subject to such measures.

(3) This Chapter shall not apply to the isolation or treatment of individuals with tuberculosis.

Cite as Ga. Comp. R. & Regs. R. 511-9-1-.01
Authority: O.C.G.A. §§ 31-2A-2, 31-2A-3, 31-2A-4, 31-2A-6, 31-3-4, 31-12-2.1, 31-12-3, 31-12-4, 38-3-51.
History. Original Rule entitled "Scope and Purpose" adopted. F. Feb. 2, 2016; eff. Feb. 22, 2016.

Rule 511-9-1-.02. Definitions.

(1) **"Commissioner"** means the Commissioner of the Department of Public Health.

(2) **"Communicable Disease"** means an infectious disease that can be transmitted from one individual to another.

(3) **"County Board of Health"** means a county board of health organized pursuant to O.C.G.A. § 31-3-1*et seq.*

(4) **"Department"** means the Department of Public Health.

(5) **"District Health Director"** means a physician who has been appointed and approved in accordance with O.C.G.A. § 31-3-15 to act as the chief executive officer of the county boards of health within a Public Health District.

(6) **"Epidemic"** means an outbreak, or rise in incidence rate, or spread of incidence of a contagious or infectious disease so as to constitute a clear and present risk of infection to the public at large or to congregated groups thereof.

(7) **"Isolate"** means to separate, confine, or restrict the movement of persons who are infected with a communicable disease.

(8) **"Pandemic"** means an epidemic occurring worldwide, or over a very wide area, crossing international boundaries and usually affecting a large number of people.

(9) **"Public Health District"** means the geographical districts established in accordance with O.C.G.A. § 31-3-15.

(10) **"Public health emergency"** means a declaration of emergency by the Governor due to the occurrence or imminent threat of an illness or health condition that is believed to be caused by bioterrorism, or the appearance of a novel, previously controlled, or eradicated infectious agent or biological toxin, which poses a high probability of a large number of deaths in the affected population, a large number of serious or long-term

disabilities in the affected population, or widespread exposure to an infectious or toxic agent that poses a significant risk of future harm to a large number of people in the affected population.

(11) **"Pandemic influenza emergency"** means a declaration of emergency by the Governor following a declaration by the World Health Organization of at least a Phase 5 Pandemic Alert for influenza occurring in the United States or the State of Georgia, or a declaration by the Centers for Disease Control and Prevention of at least a Category 2 Pandemic Severity Index for influenza occurring in the United States or the State of Georgia.

(12) **"Quarantine"** means to separate, confine, or restrict the movement of persons who were or may have been exposed to a communicable disease.

(13) **"Social Distancing"** means the measures taken whether voluntarily or under an administrative or judicial order to limit or prevent the spread of disease or exposure to toxic conditions. Such measures may include exclusion policies, isolation, quarantine, curfew, partial or complete closure of facilities including places of business, whether public or private, and restriction of movement, including the closing of borders.

(14) **"State of Emergency"** means the formal declaration of a state of emergency by the Governor in accordance with Code Section 38-3-51(a).

(15) **"Surveillance**" means the continuous, systematic collection, analysis and interpretation of health-related data needed for the planning, implementation, and evaluation of public health practice. Surveillance may include monitoring the health of individuals or groups, and may include mandatory reporting by health care providers and others.

Cite as Ga. Comp. R. & Regs. R. 511-9-1-.02
Authority: O.C.G.A. §§ 31-2A-4, 31-3-1, 31-3-15, 31-12-2.1, 31-12-3, 31-12-4, 38-3-3, 38-3-51.
History. Original Rule entitled "Definitions" adopted. F. Feb. 2, 2016; eff. Feb. 22, 2016.

Rule 511-9-1-.03. Public Health Control Measures.

(1) Upon report of a communicable disease dangerous to the public health, or upon discovery that an individual or group of individuals may be infected with or may have been exposed to a communicable disease, the Department may exercise the authorities and powers set forth in Titles 31 and 38 of the Georgia Code, including social distancing, as determined necessary to control the spread of disease.

(2) In order to control the spread of a communicable disease that may pose a threat to the public health, the Department may:

(a) Isolate persons infected with communicable diseases or conditions likely to endanger the health of others, until they are found to be free of the infectious agent or disease;

(b) Quarantine persons exposed to, or reasonably suspected of having been exposed to, a communicable disease, until they are found to be free of the infectious agent or disease;

(c) Require surveillance, including the active and direct active monitoring of carriers of disease and persons exposed to, or reasonably suspected of having been exposed to, a communicable disease, until it is determined that they no longer pose a threat of spreading disease;

(d) Require persons to be vaccinated or immunized, examined, and treated;

1. Except as provided in subsection (2) below, an individual shall be exempt from vaccination or immunization if the person, or the parent or legal guardian in the case of a minor, furnishes an affidavit that complies with DPH Rule 511-2-2-.07.

2. The Department may require vaccination or immunization of those who object on the grounds of religious beliefs if it is determined that an epidemic or the threat of an epidemic exists;

(e) Restrict travel into or within the state;

(f) Limit or cancel public gatherings;

(g) Close, evacuate, or decontaminate any facility, or destroy or decontaminate any contaminated materials, that the Department reasonably suspects may pose a danger to public health.

(3) The Department may implement a public health control measure through the issuance of an administrative order.

(4) When implementing a public health control measure, the Department may coordinate efforts with any of the local county boards of health or Public Health District staff.

(5) In addition to the measures authorized in paragraph (2) of this regulation, during a declared state of emergency, the Department shall establish any other public health control measures necessary to prevent and suppress disease and conditions deleterious to health as directed by the Governor.

Cite as Ga. Comp. R. & Regs. R. 511-9-1-.03
Authority: O.C.G.A. §§ 31-2A-4, 31-12-2.1, 31-12-3, 31-12-4, 38-3-51.
History. Original Rule entitled "Public Health Control Measures" adopted. F. Feb. 2, 2016; eff. Feb. 22, 2016.

Rule 511-9-1-.04. Powers of the County Boards of Health to Implement Public Health Control Measures.

(1) Upon report of a communicable disease dangerous to the public health, or upon discovery that an individual or group of individuals may be infected with or may have been exposed to a communicable disease, the District Health Directors may, in their capacity as chief executive officers of the County Boards of Health, exercise the authorities and powers set forth in Titles 31 of the Georgia Code, including social distancing, as determined necessary to control the spread of disease.

(2) In order to control the spread of a communicable disease that may pose a threat to the public health, the District Health Directors may:

(a) Isolate suspected infected persons with communicable diseases or conditions likely to endanger the health of others until they are found free of the infectious agent or disease;

(b) Require persons to be vaccinated or immunized, examined, and treated;

1. Except as provided in subsection (2) below, an individual shall be exempt from vaccination or immunization if the person, or the parent or legal guardian in the case of a minor, furnishes an affidavit that complies with DPH Rule 511-2-2-.07.

2. The District Health Directors may require vaccination or immunization of those who' object on the grounds of religious beliefs if it is determined that an epidemic or the threat of an epidemic exists.

(c) The District Health Directors are hereby delegated the authority to issue quarantine orders on behalf of the Department within their respective Public Health Districts, and to take all actions associated with that authority in accordance with the Georgia Code and these rules and regulations; provided, however, that the District Health Directors shall consult with the Commissioner before issuing an order for quarantine. The District Health Directors may enlist the aid of any county health department personnel under their supervision to enforce an order of quarantine.

(d) The District Health Directors are hereby delegated the authority to close, evacuate, or decontaminate, as appropriate, any facility when there is reasonable belief that such facility may endanger the public health, and to enlist the aid of any county health department personnel under their supervision; provided, however, that the District Health Directors shall consult with the Commissioner before issuing an order to close, evacuate, or decontaminate a facility.

(e) The District Health Directors may implement any control measure through the issuance of an administrative order.

Cite as Ga. Comp. R. & Regs. R. 511-9-1-.04
Authority: O.C.G.A. §§ 31-2A-4, 31-3-4, 31-12-2.1, 31-12-3, 31-12-4, 38-3-51.
History. Original Rule entitled "Powers of the County Boards of Health to Implement Public Health Control Measures" adopted. F. Feb. 2, 2016; eff. Feb. 22, 2016.

Rule 511-9-1-.05. Procedures for Implementing Isolation and Quarantine.

(1) **Issuance of Isolation or Quarantine Orders.** The isolation or quarantine of an individual or group, whether during a declared state of emergency or not, shall be conducted as follows:

(a) A written administrative order to isolate or quarantine an individual or group of individuals shall be issued when voluntary measures are deemed impracticable or ineffective. Orders shall become effective immediately upon issuance.

(b) Orders for isolation and quarantine may include, without limitation, confinement in a residence or other private or public premises including medical and non-medical facilities; conditions on travel or behavior; and exclusion of individuals or groups from certain places, including but not limited to school, workplace, public conveyances, and other places where members of the public may congregate; or a requirement that a person self-monitor specified health conditions (e.g., body temperature) and report their findings.

(c) Administrative orders to isolate or quarantine an individual or a group of individuals may be issued orally if delay in imposing the isolation or quarantine would pose a serious imminent danger to the public health. If an oral order is issued, a written order shall be issued as soon as is reasonably possible, but in no event later than 24 hours following the issuance of the oral order.

(d) A copy of the written order shall be personally delivered to the individual to be isolated or quarantined or, if that is not possible, by any means reasonably calculated to provide actual notice. If the order applies to a group of individuals and it is impractical to provide individual copies, the order shall be posted in a conspicuous place in the isolation or quarantine premises.

(e) The order of isolation or quarantine shall include the following:

1. Full name and address of person or description of the group subject to the order.

2. The clinical grounds for believing that the individual or group is infected with, or may have been exposed to, a communicable disease.

3. The location where the individual or group will be confined during the period of isolation or quarantine

4. The exact date and time when the period of isolation or quarantine will expire. If it is not possible to fix an exact date, then the order should specify the conditions or circumstances under which the individual or group would no longer pose a threat to the public health and confinement would end (e.g., the disappearance or absence of specified clinical symptoms.)

5. The conditions under which the individual or group will be isolated or quarantined.

6. Notice of right to challenge the isolation or quarantine.

(f) When individuals or groups are isolated or quarantined, whether through an administrative order or through voluntary compliance, the Department or county board of health shall determine what method and place of isolation or quarantine is appropriate based upon the suitability of an individual's home or other designated facility and the services available.

(g) To the greatest extent that it is possible to do so without jeopardizing the integrity of the isolation or quarantine, the authority issuing the isolation or quarantine order shall preserve and facilitate the ability of isolated and quarantined individuals to communicate with the outside world, and in particular to exchange confidential communications with legal and medical advisors of their choice.

(2) **Appeal From Isolation or Quarantine Orders Issued By a County Board of Health**.

(a) Individuals or groups subject to an administrative order issued under the authority of a county board of health may seek review of the order in accordance with O.C.G.A. § 31-5-3(a) by written request to the Department of Public Health, Office of General Counsel, with a copy to the person who signed the order on behalf of the county board of health.

(b) Upon receiving notice of the appeal, the person who signed the isolation or quarantine order shall immediately provide the Office of General Counsel and the subject of the appeal with a copy of all documents pertaining to the decision to issue the order and the grounds therefore. This may be done by electronic means.

(c) The hearing of an appeal from an order of a county board of health shall be conducted by a person designated by the Office of General Counsel. The Department shall make best efforts to expedite a hearing and decision on the appeal, including but not limited to the use of telephonic hearings.

(d) A request for a hearing shall not stay an isolation or quarantine order.

(e) This subsection (2) shall not apply to vaccination or quarantine orders issued during a public health emergency declared by the Governor pursuant to Code

Section 38-3-51(a). The appeal procedures specified in Code Section 38-3-51(i) shall apply to such orders.

(3) **Control of Isolation and Quarantine Premises**.

(a) The Commissioner or District Health Director may authorize physicians, health care workers, or others access to individuals in isolation or quarantine as necessary to meet the needs of isolated or quarantined individuals.

(b) No person shall enter isolation or quarantine premises unless authorized to do so by the Commissioner or by a District Health Director.

(c) Any person entering isolation or quarantine premises may be required to wear personal protective equipment or receive vaccination or any other preventative care as appropriate.

(d) Any person entering isolation or quarantine premises, with or without authorization, may be subject to an order of quarantine as deemed medically necessary.

Cite as Ga. Comp. R. & Regs. R. 511-9-1-.05
Authority: O.C.G.A. §§ 31-2A-4, 31-12-2.1, 31-5-8, 31-12-3, 31-12-4, 38-3-51.
History. Original Rule entitled "Procedures for Implementing Isolation and Quarantine" adopted. F. Feb. 2, 2016; eff. Feb. 22, 2016.

Subject 511-9-2. EMERGENCY MEDICAL SERVICES.

Rule 511-9-2-.01. Purpose.

(1) These rules establish standards for Ground Ambulance services, Air Ambulance Services, Medical First Responder Services, Neonatal Transport Services, designation of Specialty Care Centers and base station facilities, statewide and regional advisory councils, training and licensing requirements for Medics, EMS Instructor licensing, EMS Instructor/Coordinator licensing, and course approval requirements for Emergency Medical Responder, Emergency Medical Technician, Advanced Emergency Medical Technician, and Paramedic training programs, and others as may be related to O.C.G.A. Chapter 31-11.

(2) The Director or Medical Director of the Office of Emergency Medical Services and Trauma has the authority to waive any rule, procedure, or policy in the event of a public health emergency, disaster, or state of emergency in order to provide timely critical care and transportation to the injured or ill. Such waiver shall be in writing and filed with the Commissioner of the Department of Public Health.

Cite as Ga. Comp. R. & Regs. R. 511-9-2-.01
Authority: O.C.G.A. §§ 31-2A-3, 31-2A-6, 31-11-5.
History. Original Rule entitled "Purpose" adopted. F. December 14, 2011; eff. January 3, 2012.
Amended: F. Sep. 29, 2021; eff. Oct. 27, 2021, as specified by the Agency.

Rule 511-9-2-.02. Definitions.

The following definitions shall apply in the interpretation of these standards:

(a) "Advanced Cardiac Life Support (ACLS) Certification" means successful completion of a course recognized by the Department which utilizes nationally recognized advanced cardiac care standards.

(b) "Advanced Emergency Medical Technician" or "AEMT" means a person who has been licensed by the Department after having successfully attained certification by the National Registry of Emergency Medical Technicians (NREMT) as an Advanced Emergency Medical Technician (AEMT).

(c) "Advanced Life Support (ALS)" means the assessment, and if necessary, treatment or transportation by ambulance, utilizing medically necessary supplies and equipment provided by at least one individual licensed above the level of Emergency Medical Technician.

(d) "Advanced Tactical Practitioner (ATP)" means a certification issued by the United States Special Operations Command (USSOCOM) Medic Certification Program.

(e) "Air Ambulance" means a rotary-wing aircraft registered by the Department that is specially constructed and equipped and is intended to be used for air medical emergency transportation of patients.

(f) "Air Ambulance Service" means an agency or company operating under a valid license from the Department that uses Air Ambulances to provide Ambulance Service.

(g) "Ambulance Service" means the provision of emergency care and transportation for a wounded, injured, sick, invalid, or incapacitated human being to or from a place where medical care is furnished; or an entity licensed to provide such services.

(h) "Approved" means acceptable to the Department based on its determination as to conformance with existing standards.

(i) "Authorized Agent" means a person with the legal authority to sign on behalf of the legal owner of a business entity.

(j) "Base of Operations" means the primary location at which administration of the EMS Agency or EMS Initial Education Program occurs and where records are maintained. All

licensed EMS Agencies and designated EMS Initial Education Programs must designate one Base of Operations location within the State of Georgia.

(k) "Basic Life Support (BLS)" means treatment or transportation by Ground Ambulance vehicle or treatment with medically necessary supplies and services involving non-invasive life support measures.

(l) "Board" means the Board of Public Health.

(m) "Cardiac Technician" means a person who has been licensed by the Department after having successfully completed an approved Cardiac Technician certification exam, or licensed by the Composite State Board of Medical Examiners, now known as the Georgia Composite Medical Board, prior to January 1, 2002. This is a historical reference only, as no new Cardiac Technician licenses will be issued.

(n) "Charge" means a formal claim of criminal wrongdoing brought by a law enforcement official or prosecutor against an individual, whether by arrest warrant, information, accusation, or indictment.

(o) "CLIA" means the Clinical Laboratory Improvement Amendments of 1988 (42 USC 263a) and regulations (42 CFR 493) which specifies the federal standards applicable to all U.S. facilities or sites that test human specimens for health assessment or to diagnose, prevent, or treat disease.

(p) "Clinical Preceptor" means a licensed Emergency Medical Technician - Responder, Emergency Medical Technician, Advanced Emergency Medical Technician, Emergency Medical Technician-Intermediate, Cardiac Technician, Paramedic, IV team member, licensed practical nurse, registered nurse, physician's assistant, allied health professional or physician who meets the requirements for preceptors as established by the Department.

(q) "Commissioner" means the Commissioner of the Department of Public Health.

(r) "Communication Protocols" means guidelines that specify which emergency interventions require direct voice order from medical control in the rendering of prehospital emergency medical care to a patient and may include other guidelines relative to communication between Medics and medical control.

(s) "CPR Certification" means successful completion of a healthcare provider course in cardiopulmonary resuscitation which is recognized by the Department.

(t) "Department" means the Department of Public Health, Office of Emergency Medical Services and Trauma.

(u) "Designated 911 Zone Provider" means an EMS Agency providing Ground Ambulance service and operating under a valid Ground Ambulance license issued by the Department, which is granted a specific geographical territory or Emergency Response Zone to

provide emergency transport services following a Public Call in compliance with the Regional Ambulance Zoning Plan for the respective EMS Region.

(v) "Emergency" means a request for a non-planned response or an urgent need for the protection of life, health, or safety, as perceived by a prudent layperson.

(w) "Emergency Medical Services" or "Emergency Medical Services System" or "EMS" or "EMS System" means the integrated system of medical response established and designed to respond, assess, treat, and facilitate the disposition of victims of acute injury or illness and those in need of medically safe transportation. EMS also includes medical response provided in hazardous environments, rescue situations, disasters and mass casualties, mass gathering events, as well as interfacility transfer of patients and participation in community health activities.

(x) "Emergency Medical Services Agency" or "EMS Agency" means an Air Ambulance Service, Ground Ambulance Service, Medical First Responder Service, or Neonatal Transport Service licensed by the Department.

(y) "Emergency Medical Service Advisory Council" or "EMSAC" means an advisory council that provides advice to the Department in matters essential to its operations with respect to Emergency Medical Services.

(z) "Emergency Medical Services Medical Director" or "EMS Medical Director" or "Medical Director" means a physician licensed to practice in this state who provides medical direction to an EMS Agency licensed by the Department or an EMS Initial Education Program designated by the Department.

(aa) "Emergency Medical Services Medical Directors Advisory Council" or "EMSMDAC" means an advisory council that provides advice to the Department on issues essential to medical direction of the EMS system.

(bb) "Emergency Medical Services Personnel" or "EMS Personnel" means any Emergency Medical Technician - Responder, Emergency Medical Technician, Emergency Medical Technician-Intermediate, Advanced Emergency Medical Technician, Cardiac Technician, or Paramedic licensed by the Department.

(cc) "Emergency Medical Service Region" or "EMS Region" means a geographic area identified by the Department for the purpose of administratively sub-dividing the Emergency Medical Services system in this state. Each EMS Region shall be comprised of counties from one or more health districts established by the Department.

(dd) "Emergency Medical Technician" or "EMT" means a person who has been licensed by the Department after being certified by National Registry of Emergency Medical Technicians (NREMT) as an Emergency Medical Technician (EMT).

(ee) "Emergency Medical Technician - Intermediate" or "EMT-I" means a person who has been licensed by the Department after being certified by the National Registry of

Emergency Medical Technicians (NREMT) as an Emergency Medical Technician - Intermediate (EMT-I) prior to March 31, 2013, or licensed by the former Georgia Department of Human Resources as an EMT prior to January 1, 2002. This is a historical reference only, as no new Emergency Medical Technician - Intermediate licenses will be issued.

(ff) "Emergency Medical Technician - Responder" or "EMT-R" means a person who has been licensed by the Department after being certified by the National Registry of Emergency Medical Technicians (NREMT) as an Emergency Medical Responder (EMR).

(gg) "Emergency Response Zone" or "ERZ" means a geographical territory identified by the Department within each EMS Region for the purposes of providing emergency medical transport services by designated Ground Ambulance Services following a Public Call.

(hh) "EMS Initial Education Program" means an instructional program of Department-approved EMS initial education courses at the EMR, EMT, AEMT, and/or Paramedic levels.

(ii) "EMS Initial Education Program Sponsor" or "Sponsor" means a Georgia licensed EMS Agency or Fire Department; accredited hospital, clinic, or medical center; accredited educational institution, or other Department approved entity that has accepted responsibility for the operation of an EMS Initial Education Program.

(jj) "EMS Instructor" means an individual who is qualified to teach EMS continuing education courses, community education programs, and who is licensed to coordinate or serve as the lead instructor of National Continued Competency Requirement (NCCR) courses as specified by the National Registry of Emergency Medical Technicians (NREMT), and who is further licensed to coordinate or serve as the lead instructor of an EMR initial education course approved by the Department.

(kk) "EMS Instructor/Coordinator (AEMT)" or "EMS I/C (A)" means an individual who meets all requirements for licensure as an EMS Instructor and who is further qualified and licensed to coordinate or serve as the lead instructor of an initial EMR, EMT, or AEMT course approved by the Department.

(ll) "EMS Instructor/Coordinator (EMT)" or "EMS I/C (E)" means an individual who meets all requirements for licensure as an EMS Instructor and who is further qualified and licensed to coordinate or serve as the lead instructor of an initial EMR or EMT course approved by the Department.

(mm) "EMS Instructor/Coordinator (Paramedic)" or "EMS I/C (P)" means an individual who meets all requirements for licensure as an EMS Instructor and who is further qualified and licensed to coordinate or serve as the lead instructor of an initial EMR, EMT, AEMT, or Paramedic course approved by the Department.

(nn) "EMS Instructor with Paramedic Endorsement" or "EMS Instructor (Paramedic)" means an individual who was previously licensed by the Department as a Level III EMS Instructor; who does not hold an associate degree or higher, but who otherwise meets all requirements for licensure as an EMS Instructor/Coordinator (Paramedic); and who is qualified and licensed to coordinate or serve as the lead instructor of an initial EMR, EMT, or AEMT course approved by the Department and to serve as an instructor in an initial Paramedic course approved by the Department. This is a historical reference only, as no new EMS Instructor with Paramedic Endorsement licenses will be issued.

(oo) "Good Standing" as used in this rule refers to a license that is not lapsed, is unrestricted, not on probation or suspension, is not currently under investigation, has no pending actions against it, and has had no adverse action taken against it that is still in effect.

(pp) "Ground Ambulance" means a motor vehicle registered by the Department that is specially constructed and equipped and is intended to be used for emergency transportation of patients.

(qq) "Ground Ambulance Service" means an agency or company operating under a valid license from the Department that uses Ground Ambulances to provide Ambulance Service.

(rr) "Health District" means a geographical district designated by the Department of Public Health pursuant to O.C.G.A. § 31-3-15.

(ss) "Invalid Car" means a non-emergency transport vehicle used only to transport persons who are convalescent or otherwise non-ambulatory, and do not require medical care during transport.

(tt) "License (Agency)" means a license issued to a Medical First Responder Service or to a Ground Ambulance Service, Air Ambulance Service or Neonatal Transport Service which signifies that the agency's facilities, vehicles, personnel, and operations comply with Title 31, Chapter 11 of the Official Code of Georgia Annotated, the regulations promulgated thereunder, and the policies of the Department.

(uu) "License (Medic or Instructor)" means a license issued to a person which signifies that the person has met the requirements for the respective level of individual licensure specified in Title 31, Chapter 11 of the Official Code of Georgia Annotated, the regulations promulgated thereunder, and the policies of the Department.

(vv) "Licensee" means all persons licensed by the Department pursuant to Chapter 31-11 and/or these rules, all owners and officers of entities licensed pursuant to Chapter 31-11, and all applicants for a license pursuant to Chapter 31-11 and/or these rules.

(ww) "License Officer" means the Commissioner of Public Health or his/her designee.

(xx) "License Renewal Cycle" means a period of time established by the Department for renewal of licenses.

(yy) "Medic" means an individual who is currently licensed by the Department as an Emergency Medical Technician - Responder, Emergency Medical Technician, Emergency Medical Technician - Intermediate, Advanced Emergency Medical Technician, Cardiac Technician, or Paramedic.

(zz) "Medical Control" means the clinical guidance from a physician to EMS Personnel regarding the prehospital management of a patient.

(aaa) "Medical Direction" means the administrative process of providing medical guidance or supervision including but not limited to system design, education, critique, and quality improvement by a physician to EMS Personnel, EMS Initial Education Programs, and EMS Agencies.

(bbb) "Medical First Responder Service" means an agency or company duly licensed by the Department that provides on-site care until the arrival of the Department's Designated 911 Zone Provider.

(ccc) "Medical First Responder Vehicle" means a motor vehicle registered by the Department for the purpose of providing response to emergencies.

(ddd) "Medical Protocol" means prehospital treatment guidelines, approved by the local EMS Medical Director, used to manage an emergency medical condition in the field by outlining the permissible and appropriate medical treatment that may be rendered by EMS Personnel to a patient experiencing a medical emergency or injury.

(eee) "Neonatal Transport Personnel" means licensed or certified health care professionals specially trained in the care of neonates.

(fff) "Neonatal Transport Service" means an agency or company operating under a valid license from the Department that provides facility-to-facility transport for Neonates, infants, children or adolescents.

(ggg) "Neonatal Transport Vehicle" or "Neonatal Ambulance" means a motor vehicle registered by the Department that is equipped for the purpose of transporting Neonates to a place where medical care is furnished.

(hhh) "Neonate" means an infant 0 - 184 days of age, as defined by the Georgia Regional Perinatal Care Program.

(iii) "Nurse" means an individual who is currently licensed in the State of Georgia as a Registered Nurse or Licensed Practical Nurse.

(jjj) "Office of Emergency Medical Services and Trauma" means the regulatory subdivision of the Georgia Department of Public Health that is directly responsible for administration of the statewide EMS system.

(kkk) "Paramedic" means a person who has been licensed by the Department after having been certified by the National Registry of Emergency Medical Technicians (NREMT) as a Paramedic, certified by the United States Special Operations Command (USSOCOM) as an Advanced Tactical Practitioner (ATP), or licensed as a Paramedic by the Composite State Board of Medical Examiners, now known as the Georgia Composite Medical Board, prior to January 1, 2002.

(lll) "Patient Care Report" or "Prehospital Care Report" or "PCR" means the required written or electronic data set that is submitted to the Department or to an acute care facility by an EMS Agency regarding each request for an EMS response. The required data set shall include all data elements specified by the Department.

(mmm) "Provisional License (Agency)" means a license issued to an EMS Agency on a conditional basis to allow a newly established EMS Agency to demonstrate that its facilities and operations comply with state statutes and these rules and regulations.

(nnn) "Provisional License (Medic)" is defined as a license at the EMT, AEMT or Paramedic level that is issued by the Department to a person who is provisionally certified by the National Registry of Emergency Medical Technicians (NREMT) at the respective level of application. Provisional licenses are non-renewable except in times of a prolonged public health emergency or as deemed necessary by the Department.

(ooo) "Public Safety Answering Point" or "PSAP" means an answering location for 911 calls originating in a given area.

(ppp) "Public Call" means a request for a Ground Ambulance Service from a member of the public to a Public Safety Answering Point (PSAP) when dialing "911" or the PSAP's ten-digit phone number, or a request for an ambulance by any law enforcement agency, fire department, rescue squad, or any other public safety agency.

(qqq) "Reasonable Distance" means the allowable distance for patient transport established by the local EMS Medical Director based on the ambulance service's geographical area of responsibility, the ambulance service's ability to maintain emergency capabilities, and hospital resources.

(rrr) "Regional Ambulance Zoning Plan" means the Department approved method of distributing emergency calls among designated Ground Ambulance Services in designated geographical territories or Emergency Response Zones within each EMS Region in the State.

(sss) "Regional Emergency Medical Services Medical Director" or "Regional EMS Medical Director" means a person, having approval of the Regional EMS Council and Office of Emergency Medical Services and Trauma, who is a physician licensed to practice medicine in this state, familiar with the design and operation of prehospital emergency care, experienced in the prehospital emergency care of acutely ill or injured patients, and experienced in the administrative processes affecting regional and state prehospital Emergency Medical Services systems.

(ttt) "Regional Trauma Advisory Committee" or "RTAC" means a trauma-specific multidisciplinary, multi-agency advisory group that is a committee of the Regional EMS Advisory Council for a given EMS Region.

(uuu) "Reserve Ambulance" means a registered ambulance that temporarily does not meet the standards for ambulance equipment and supplies in these rules and policies of the Department.

(vvv) "Scope of Practice" means the description, as specified by the Department, of what a Licensee legally can, and cannot, do, based on the Licensee's level of licensure. It is a legal description of the distinction between licensed health care personnel and the lay public, and between different licensed health care professionals.

(www) "Specialty Care Center" means a licensed hospital dedicated to a specific sub-specialty care including, but not limited to, trauma, stroke, pediatric, burn and cardiac care.

(xxx) "Specialty Care Transport" means transportation in a registered Ground Ambulance, Air Ambulance or Neonatal Ambulance during which certain special skills above and beyond those taught in state approved initial Paramedic education are utilized. Provided, however, that this definition is not intended to authorize a Medic to operate beyond his or her Scope of Practice.

Cite as Ga. Comp. R. & Regs. R. 511-9-2-.02
Authority: O.C.G.A. §§ 31-2A-3, 31-2A-6, 31-11-2, 31-11-5.
History. Original Rule entitled "Definitions" adopted. F. December 14, 2011; eff. January 3, 2012.
Amended: F. Apr. 27, 2016; eff. May 17, 2016.
Amended: F. Nov. 14, 2019; eff. Dec. 9, 2019, as specified by the Agency.
Amended: F. Oct. 20, 2020; eff. Nov. 18, 2020, as specified by the Agency.
Amended: F. Sep. 29, 2021; eff. Oct. 27, 2021, as specified by the Agency.

Rule 511-9-2-.03. Statewide Emergency Medical Services Advisory Councils.

(1) Emergency Medical Services Advisory Council.

(a) Purpose. A statewide Emergency Medical Services Advisory Council (EMSAC) shall be established to advise the Department in matters essential to its operations with respect to emergency medical services systems.

(b) General Provisions.

1. The Director and Deputy Director of the State Office of EMS and Trauma shall act as liaisons between EMSAC and the Department, and shall provide support, education, and guidance to EMSAC related to its roles.

2. EMSAC recommendations are advisory and are not binding on the Department or on agencies under contract to the Department.

3. EMSAC shall adopt bylaws subject to the approval of the Department and shall conduct its business in accordance with the Georgia Open Records and Open Meetings Acts. Bylaws shall address frequency of meetings, recording of minutes, membership, creation and function of committees, managing of conflicts of interest, voting, and other issues relevant to the function of an advisory council.

4. EMSAC shall be composed of between twenty-five (25) and thirty-five (35) members who are knowledgeable in the field of EMS systems and all components thereof, and who represent a broad cross-section of Georgia's citizens. Membership shall include representation from each of the following categories, provided that a single member may represent more than one category:

   (i) At least one representative from each of the state's ten EMS Regions;

   (ii) At least one representative from each of the following systems of care:

      (a) Cardiac

      (b) Stroke

      (c) Trauma

      (d) Pediatrics

      (e) Perinatal Care/Obstetrics

   (iii) A representative from the statewide Emergency Medical Services Medical Director's Advisory Council;

   (iv) A representative of EMS education;

   (v) A representative from a fire/rescue service;

   (vi) A representative from an emergency management agency;

   (vii) At least one representative from each of the following EMS agency license types:

      (a) Ground Ambulance

(b) Neonatal Ambulance

(c) Air Ambulance

(d) Medical First Responder

(viii) At least one representative from each of the following EMS agency ownership types:

(a) Government (City, County, or State)

(b) Private (Corporation, Limited Liability Company, Sole Proprietorship, or other entity)

(c) Hospital

(ix) Consumers or experts in the field of EMS.

5. Members shall be appointed by the Commissioner or his/her designee for a term specified in EMSAC's bylaws.

6. Each EMSAC member shall serve in a volunteer capacity, without remuneration by the Department, and shall not be entitled to reimbursement of any expenses, including travel expenses.

(c) EMSAC's responsibilities shall include, but not be limited to:

1. Recommending standards and policies which affect those persons, services, or agencies regulated under these rules and Chapter 11 of Title 31 of the Official Code of Georgia;

2. Reviewing and providing comment on legislative proposals; and

3. Participating as an advocacy body to improve Georgia's statewide emergency medical services systems and all components thereof.

(2) Emergency Medical Services Medical Directors Advisory Council.

(a) Purpose. The Department shall establish a statewide Emergency Medical Services Medical Directors Advisory Council (EMSMDAC) to advise the Department on issues related to medical direction of the EMS system.

(b) General Provisions.

1. The Director and Deputy Director of the State Office of EMS and Trauma and the State EMS Medical Director shall serve as liaisons between EMSMDAC and the Department, and shall provide support, education, and guidance to EMSMDAC related to its roles.

2. EMSMDAC recommendations are advisory and are not binding on the Department or on agencies under contract to the Department.

3. EMSMDAC shall adopt bylaws subject to the approval of the Department and shall conduct its business in accordance with the Georgia Open Records and Open Meetings Acts. Bylaws shall address frequency of meetings, recording of minutes, membership, creation and function of committees, managing conflicts of interest, voting, and other issues relevant to the function of an advisory council.

4. EMSMDAC shall be composed of between twenty-five (25) and thirty (30) physician members who are knowledgeable in the field of EMS systems and all components thereof, and who represent a broad cross-section of Georgia's EMS programs and the medical community. Membership shall include representation from each of the following categories, provided that a single member may represent more than one category:

   (i) At least one member from each of the state's ten EMS Regions;

   (ii) At least one representative from each of the following systems of care:

      (a) Cardiac

      (b) Stroke

      (c) Trauma

      (d) Pediatrics

      (e) Perinatal Care/Obstetrics

   (iii) Physicians with an interest and/or expertise in the provision of emergency medical care.

5. EMSMDAC members shall be appointed by the Commissioner or his/her designee for a term specified in EMSMDAC's bylaws.

6. Each EMSMDAC member shall serve in a volunteer capacity, without remuneration by the Department, and shall not be entitled to reimbursement of any expenses, including travel expenses.

(c) Responsibilities of EMSMDAC shall include, but not be limited to:

1. Acting as a liaison with the medical community, medical facilities, and appropriate governmental entities;

2. Advising and providing consultation to the Department on practice issues related to the care delivered by entities and personnel under the jurisdiction of the Department;

3. Advising on and reviewing matters of medical direction and training in conformity with accepted emergency medical practices and procedures;

4. Recommending and reviewing policies and procedures affecting patient care rendered by EMS personnel;

5. Advising on the scope and extent of EMS practice for the emergency medical services of Georgia;

6. Advising on the scope of practice for EMS personnel licensed in Georgia;

7. Advising on the formulation of medical, communication, and emergency transportation protocols; and

8. Advising on quality improvement issues related to patient care rendered by EMS personnel.

Cite as Ga. Comp. R. & Regs. R. 511-9-2-.03
Authority: O.C.G.A. §§ 31-2A-3, 31-2A-6, 31-11-5, 31-11-60.1.
History. Original Rule entitled "Emergency Medical Services Advisory Councils" adopted. F. December 14, 2011; eff. January 3, 2012.
Amended: F. Apr. 27, 2016; eff. May 17, 2016.
Amended: New Rule entitled "Statewide Emergency Medical Services Advisory Councils." F. Nov. 14, 2019; eff. Dec. 9, 2019, as specified by the Agency.

Rule 511-9-2-.04. Regional Emergency Medical Services Advisory Councils.

(1) Purpose. In accordance with the designation made by the Board of Public Health pursuant to Georgia Code Section 31-11-3(a), a Regional Emergency Medical Services Advisory Council (REMSAC) shall serve as the local coordinating entity in each EMS Region.

(2) General Provisions

(a) The Regional EMS Director shall serve as a liaison between the Department and the REMSAC in each EMS Region, and shall provide support, education, and

guidance on the REMSAC's responsibilities related to its role as the designated local coordinating entity for their EMS Region.

(b) Each REMSAC shall adopt bylaws subject to the approval of the Department and shall conduct its business in accordance with the Georgia Open Records and Open Meetings Acts. Bylaws shall address frequency of meetings, recording of minutes, membership, terms of members, creation and function of committees, managing conflicts of interest, voting, administration and review of the Regional Ambulance Zoning Plan, and other issues relevant to the function of an advisory council.

(c) Each REMSAC shall be composed of between twenty-five (25) and fifty (50) members who are both knowledgeable and interested in the EMS system and represent the interests of a broad cross-section of the EMS Region's citizens. Membership shall include representation from each of the following categories, provided that a single member may represent more than one category:

1. At least one member from each of the counties served by the REMSAC shall be appointed by the county commission, subject to membership requirements specified in the REMSAC bylaws;

2. At least one representative from each of the following systems of care:

   (i) Cardiac

   (ii) Stroke

   (iii) Trauma

   (iv) Pediatrics

   (v) Perinatal Care/Obstetrics

3. An EMS agency medical director from a designated 911 zone provider in a county served by the REMSAC;

4. A representative of EMS education;

5. A representative from a fire/rescue service;

6. A representative from an emergency management agency;

7. At least one representative from each of the following EMS agency license types, if present in the EMS Region:

   (i) Air Ambulance

   (ii) Ground Ambulance

(iii) Neonatal Ambulance

(iv) Medical First Responder

8. At least one representative from each of the following EMS agency ownership types, if present in the EMS Region:

   (i) Government (City, County, or State)

   (ii) Private (Corporation, Limited Liability Company, Sole Proprietorship, or other entity)

   (iii) Hospital

9. Consumers or experts in the field of EMS.

(d) REMSAC members, other than those appointed by the county commissions, shall be appointed by the Commissioner or his/her designee, subject to membership requirements specified in the REMSAC bylaws.

(e) Each REMSAC member shall serve in a volunteer capacity, without remuneration by the Department, and shall not be entitled to reimbursement of any expenses, including travel expenses.

(3) Regional Ambulance Zoning Plan

(a) Each EMS Region shall have a Regional Ambulance Zoning Plan that is based primarily on the considerations of economy, efficiency, and benefit to the public welfare.

(b) The Department shall develop the Regional Ambulance Zoning Plan based on recommendations from the REMSAC and shall provide oversight and supervision of the operations of the Regional Ambulance Zoning Plan for each EMS Region.

(c) The REMSAC shall make recommendations to the Board or its designee for the designation of one or more 911 Zone Provider(s) for each Emergency Response Zone within the EMS Region, subject to approval or modification by the Board or its designee in accordance with the procedures set forth in Code Section 31-11-3 and under the circumstances outlined in subparagraph (4) of this Rule.

(d) Following implementation of the Regional Ambulance Zoning Plan, the REMSAC may review data regarding key performance measures specified by the Department for each designated 911 Zone Provider in the EMS Region.

(e) The Department may make administrative updates to the Regional Ambulance Zoning Plan as needed. Such updates may include business name changes and documentation of subcontracting relationships between designated 911 zone providers and other licensed ambulance services.

(f) The Department may designate a licensed ambulance service to serve as a temporary 911 Zone Provider for an Emergency Response Zone if the current designated 911 Zone Provider abandons the Emergency Response Zone, is no longer eligible to participate in the Regional Ambulance Zoning Plan, or surrenders the Emergency Response Zone with notice insufficient to allow timely modification of the Regional Ambulance Zoning Plan. The temporary designation shall be in place until the Regional Ambulance Zoning Plan is modified in accordance with subsection (4), below.

(4) Modification of the Regional Ambulance Zoning Plan

(a) The REMSAC shall make recommendations for modification of the Regional Ambulance Zoning Plan to the Board or its designee, in accordance with the procedures established in subparagraph (b) of this section, if any of the following events occurs:

1. The current designated 911 Zone Provider is no longer eligible to participate in the Regional Ambulance Zoning Plan, as determined by the Department; or

2. The current designated 911 Zone Provider notifies the Department that it intends to voluntarily surrender its designation status for its assigned Emergency Response Zone(s); or

3. The current designated 911 Zone Provider has abandoned its assigned Emergency Response Zone(s), as determined by the Department; or

4. The REMSAC receives a written request for a detailed examination and assessment of the Regional Ambulance Zoning plan for one or more Emergency Response Zones, conducts a detailed examination and assessment in accordance with procedures specified by the Department, and determines that:

(i) There has been a significant decline in the economy, efficiency, or benefit to the public welfare within a specific Emergency Response Zone or the EMS Region as a whole; or

(ii) There exists an opportunity for significant improvement in the economy, efficiency, or benefit to the public welfare within a specific Emergency Response Zone or the EMS Region as a whole.

(b) The REMSAC shall comply with the following procedures when making recommendations for modification of the Regional Ambulance Zoning Plan:

1. The REMSAC shall post a notice soliciting proposals from all licensed ambulance providers seeking designation as the 911 zone provider for a specific Emergency Response Zone. The notice shall specify:

   (i) The ten (10) day period during which proposals will be accepted; and

   (ii) The information that must be included in the proposal including, but not limited to, a written description of the territory in which the ambulance provider can respond to emergency calls and data regarding key performance measures as specified by the Department.

2. The REMSAC shall evaluate all proposals based primarily on the considerations of economy, efficiency, and benefit to the public welfare.

3. Within ten (10) days after the period for receiving proposals has ended, the REMSAC shall make a recommendation to the Board or its designee, in the format specified by the Department, regarding the territorial zones and the method of distributing emergency calls among the ambulance providers within the EMS Region. If the REMSAC's recommendation includes a change in one or more designated 911 zone providers, the recommendation shall provide for a transition plan and include the effective date of the modification.

(c) The Board or its designee, upon receipt of the REMSAC's recommendation, shall either approve the recommendation, conduct a hearing as provided in Code Section 31-11-3(d), or remand the recommendation back to the REMSAC if the Department determines the REMSAC did not follow procedures set forth in this rule.

(d) The Regional Ambulance Zoning Plan shall be administered in accordance with the decision of the Board or its designee.

Cite as Ga. Comp. R. & Regs. R. 511-9-2-.04
Authority: O.C.G.A. §§ 31-2A-3, 31-2A-6, 31-11-3, 31-11-5.
History. Original Rule entitled "Designation of Specialty Care Centers" adopted. F. December 14, 2011; eff. January 3, 2012.
Amended: F. Apr. 2, 2015; eff. Apr. 22, 2015.
Note: Correction of non-substantive typographical error on SOS website, original Rule title "Licensure of Air Ambulance Services" corrected to "Designation of Specialty Care Centers." Effective May 17, 2016.
Amended: F. May 19, 2017; eff. June 8, 2017.
Amended: F. Jan. 24, 2018; eff. Feb. 13, 2018.
Amended: F. June 22, 2018; eff. July 12, 2018.
Repealed: F. Sep. 16, 2019; eff. Oct. 16, 2019, as specified by the Agency.
Amended: F. Nov. 14, 2019; eff. Dec. 9, 2019, as specified by the Agency.

Rule 511-9-2-.05. Designation of Specialty Care Centers.

(1) Trauma and Burn Centers.

(a) Applicability.

1. No hospital shall hold itself out as or advertise to the public that it is designated by the Department as a trauma or burn center without first meeting the requirements of these rules and obtaining approval from the Department.

2. This section is not intended to prevent any hospital from providing medical care to any trauma or burn patient.

(b) Designation of Trauma and Burn Centers.

1. Any hospital seeking designation or re-designation by the Department as a Level I, Level II, Level III, or Level IV trauma center must submit a written application to the Department in a manner and on forms as determined by the Department, and shall meet, at a minimum, the requirements defined by the American College of Surgeons Committee on Trauma.

2. Any hospital seeking designation or re-designation by the Department as a burn center must submit a written application to the Department in a manner and on forms as determined by the Department, and must hold and maintain current verification as a burn center by the American Burn Association.

3. The Department may establish additional levels and types of trauma and burn centers as necessary based on advancements in medicine and patient care.

4. Each designated trauma center shall submit data to the state trauma registry in a manner and frequency as prescribed by the Department.

(c) The Department may suspend or revoke a hospital's designation as a trauma or burn center, after providing written notice to the hospital, if the Department determines that the hospital is not in compliance with the requirements or criteria of these rules or applicable statutes. The Department shall provide an administrative hearing on the action to suspend or revoke a hospital's designation if the hospital makes a written request for a hearing. Such written request must be delivered to and received by the Department no later than twenty days after the hospital receives notice of the action. If a timely request for a hearing is not received, the action will become effective twenty days after the hospital's receipt of the notice. In lieu of suspending or revoking a hospital's trauma or burn center designation, the Department may re-designate the hospital at another level and/or type of trauma or burn center if it is determined that the hospital does not meet the criteria for its current level of designation.

(2) Stroke Centers.

(a) Applicability.

1. No hospital shall hold itself out as or advertise to the public that it is designated by the Department as a comprehensive, thrombectomy-capable, primary, remote treatment, or any other level of stroke center without first meeting the requirements of these rules and obtaining approval from the Department.

2. This section is not intended to prevent any hospital from providing medical care to any stroke patient.

3. The Department, in consultation with the Georgia Coverdell Acute Stroke Registry, may establish additional levels of stroke centers as necessary based on advancements in medicine and patient care.

(b) Designation of Comprehensive, Thrombectomy-Capable, and Primary Stroke Centers.

1. Any hospital seeking designation or re-designation by the Department as a comprehensive, thrombectomy-capable, or primary stroke center must submit a written application to the Department in a manner and on forms as determined by the Department.

2. An applicant for designation or re-designation as a comprehensive, thrombectomy-capable, or primary stroke center must hold and maintain a current certification as a comprehensive, thrombectomy-capable, or primary stroke center by a national healthcare accreditation body recognized by the Department.

(c) Designation of Remote Treatment Stroke Centers.

1. Any hospital seeking designation or re-designation by the Department as a remote treatment stroke center must submit a written application to the Department in a manner and on forms as determined by the Department.

2. Designation Through National Accreditation. An applicant must hold and maintain a current certification as an acute stroke-ready hospital by a national healthcare accreditation body recognized by the Department to be eligible for designation as a remote treatment stroke center.

3. Designation Through Evaluation by Department.

(i) An applicant that does not hold a current certification as an acute stroke-ready hospital by a national healthcare accreditation body recognized by the Department shall undergo an evaluation by the

Department. The Department will schedule and conduct an inspection of the applicant's facility within ninety days of receipt of a complete application.

(ii) The applicant will be evaluated on the standards and clinical practice guidelines established by the American Heart Association and American Stroke Association. In addition, the applicant must establish cooperating stroke care agreements with designated comprehensive, thrombectomy-capable, or primary stroke center and must utilize current and acceptable telemedicine protocols relative to acute stroke treatment.

(d) In order to assure that patients are receiving the appropriate level of care and treatment at each level of stroke center in the state, each hospital designated and identified by the Department as a stroke center must participate in the Georgia Coverdell Acute Stroke Registry, and shall submit data to the Registry as required by the Department in accordance with time frame requirements as established by the Department, including, but not limited to, the following information:

1. Date of admission and discharge;
2. Patient disposition at discharge;
3. Patient identifier, currently known as "Georgia LONGID," that consists of elements as defined by the Department;
4. Patient age, gender, and race;
5. Location where stroke occurred;
6. Patient arrival mode;
7. Patient's past medical and medication history;
8. Clinical diagnosis of type of stroke or transient ischemic attack;
9. The National Institutes of Health stroke scale score;
10. Serum low density lipoprotein level;
11. Whether stroke symptoms were resolved at time of presentation;
12. Earliest time patient placed on comfort measure only;
13. Whether patient was admitted for elective carotid intervention;

14. Whether patient was participating in a stroke related clinical trial;

15. Whether in-hospital treatment with intravenous or intra-arterial thrombotic or mechanical clot removal, antithrombotic, or venous thromboembolism prophylaxis was provided, or reason for not providing each treatment;

16. Date and time of last known well visit, hospital arrival, imaging, and treatment administration;

17. Whether dysphagia screen had been completed;

18. Whether treatment at discharge with antithrombotic, anticoagulant, or statin (lipid-lowering medication) was provided, or reason for not providing each treatment;

19. Whether smoking cessation advice or counseling was provided;

20. Whether stroke education was provided;

21. Whether rehabilitation services were provided; and

22. Modified Rankin Scale score at discharge.

(e) The Department may suspend or revoke a hospital's designation as a stroke center, after providing written notice to the hospital, if the Department determines that the hospital is not in compliance with the requirements or criteria of these rules or applicable statutes. The Department shall provide an administrative hearing on the action to suspend or revoke a hospital's designation if the hospital makes a written request for a hearing. Such written request must be delivered to and received by the Department no later than twenty days after the hospital receives notice of the action. If a timely request for a hearing is not received, the action will become effective twenty days after the hospital's receipt of the notice. In lieu of suspending or revoking a hospital's stroke center designation, the Department may re-designate the hospital at another level of stroke center if it is determined that the hospital does not meet the criteria for its current level of designation.

(3) Emergency Cardiac Care Centers.

(a) Applicability.

1. No hospital shall hold itself out as or advertise to the public that it is designated by the Department as a Level I, Level II, or Level III emergency cardiac care center without first meeting the requirements of these rules and obtaining approval from the Department.

2. This section is not intended to prevent any hospital from providing medical care to any cardiac patient.

3. The Department may establish additional levels of emergency cardiac care centers as necessary based on advancements in medicine and patient care.

(b) Designation of Emergency Cardiac Care Centers.

1. Any hospital seeking designation or re-designation by the Department as an emergency cardiac care center must submit a written application to the Department in a manner and on forms as determined by the Department.

2. The Department's review of applications for designation and re-designation as an emergency cardiac care center may include an on-site inspection of the hospital.

(c) Designation Criteria.

1. Applicants for designation as an emergency cardiac care center shall meet, at a minimum, the following criteria:

(i) Level I:

(I) Cardiac catherization and angioplasty facilities available 24 hours per day, seven days per week, 365 days per year;

(II) On-site cardiothoracic surgery capability available 24 hours per day, seven days per week, 365 days per year;

(III) Established protocols for therapeutic hypothermia for out-of-hospital cardiac arrest patients;

(IV) The ability to implant percutaneous left ventricular assist devices for support of hemodynamically unstable patients experiencing out-of-hospital cardiac arrest or heart attack;

(V) Neurologic protocols to measure functional status at hospital discharge; and

(VI) The ability to implant automatic implantable cardioverter defibrillators.

(ii) Level II:

(I) Cardiac catherization and angioplasty facilities available 24 hours per day, seven days per week, 365 days per year, but no on-site cardiothoracic surgery capability;

(II) Established protocols for therapeutic hypothermia for out-of-hospital cardiac arrest patients;

(III) Neurologic protocols to measure functional status at hospital discharge; and

(IV) A written transfer plan with one or more Level I emergency cardiac care centers for patients who need left ventricular assist devices or cardiothoracic surgery.

(iii) Level III:

(I) Established protocols for therapeutic hypothermia for out-of-hospital cardiac arrest patients; and

(II) A written plan for systematic transfer of patients to a Level I or Level II facility.

2. Coordinating agreements established between cardiac care centers shall be in writing and shall include at a minimum:

(i) Transfer agreements for the transport and acceptance of cardiac patients seen by:

i. A Level I emergency cardiac care center for care which a Level II or III emergency cardiac care center does not provide; or

ii. A Level II emergency cardiac care center for care which a Level III emergency cardiac care center does not provide; and

(ii) Communications criteria and protocols between the emergency cardiac care centers.

(d) Data Reporting.

1. Each hospital designated and identified by the Department as an emergency cardiac care center must report the following to designated registries as determined by the Department in accordance with time frame requirements established by the Department:

(i) Required data elements on all out-of-hospital cardiac arrest patients as determined by the Department; and

(ii) Required data elements on all heart attack patients as determined by the Department.

2. Each emergency cardiac care center shall have a written system describing the timely submission of all data described in subsection (i) and (ii) of this section.

(e) The Department may suspend or revoke a hospital's designation as an emergency cardiac care center, after providing written notice to the hospital, if the Department determines that the hospital is not in compliance with the requirements or criteria of these rules or applicable statutes. The Department shall provide an administrative hearing on the action to suspend or revoke a hospital's designation if the hospital makes a written request for a hearing. Such written request must be delivered to and received by the Department no later than twenty days after the hospital receives notice of the action. If a timely request for a hearing is not received, the action will become effective twenty days after the hospital's receipt of the notice. In lieu of suspending or revoking a hospital's designation, the Department may re-designate a hospital at another level of emergency cardiac care if it is determined that a hospital does not meet the criteria for a hospital's current level of designation.

(4) Confidentiality. All information reported to any registry as described by this Rule shall be deemed confidential, except that the Department may in its discretion release such reports or data in de-identified form or for research purposes determined by the Department to have scientific merit. Under no circumstances may information reported to any registry as described by this Rule be released in such a manner as to lead to the identification of any hospital, institution, or clinic.

(5) Provisional designation. A hospital seeking initial designation as a specialty care center may be designated on a provisional basis, in the Department's sole discretion, to afford the hospital additional time to demonstrate that its facilities and operations are able to maintain full compliance with the requirements of this rule. Provisional designation shall be granted for a specified time period, not to exceed one year, and shall be subject to the terms and conditions established by the Department.

Cite as Ga. Comp. R. & Regs. R. 511-9-2-.05
Authority: O.C.G.A. §§ 31-5-5, 31-2A-6, 31-11-110 through 31-11-119, 31-11-130 through 31-11-139.
History. Reserved. F. December 14, 2011; eff. January 3, 2012.
Adopted: Original Rule entitled "Designation of Specialty Care Centers." F. Sep. 16, 2019; eff. Oct. 16, 2019, as specified by the Agency.

Rule 511-9-2-.06. Licensure of Air Ambulance Services.

(1) Applicability

(a) No person shall operate, advertise, or hold themselves out to be an Air Ambulance Service in the state of Georgia without being in compliance with the provisions of O.C.G.A. Chapter 31-11 and these rules and regulations and without being duly licensed by the Department. However, this Rule shall not apply to the following:

1. An air ambulance or air ambulance service operated by an agency of the United States government;

2. A vehicle rendering assistance temporarily in the case of a declared major catastrophe, disaster, or public health emergency which is beyond the capabilities of available Georgia licensed Air Ambulance Services;

3. An air ambulance operated from a location outside of Georgia and transporting patients picked up beyond the limits of Georgia to locations within Georgia;

4. An air ambulance service licensed to operate in another state and transporting patients picked up at a medical facility within the limits of Georgia to locations outside the limits of Georgia, unless such air ambulance is pre-positioned within the limits of Georgia prior to receiving the request for transport;

5. An air ambulance licensed in a state adjacent to Georgia that is responding to a request from a Georgia licensed EMS Agency;

6. An air ambulance or air ambulance service owned and operated by a governmental entity whose primary role is not to transport patients by air ambulance, and who is not receiving payment for such services;

7. An air ambulance or air ambulance service owned and operated by a bona fide non-profit charitable institution and that is not for hire.

(2) Application for a license or provisional license shall be made to the license officer in the manner and on the forms approved by the Department, to include at a minimum the name, address, email address, and employer identification number of the owner(s).

(3) Renewal of License. Renewal of any license issued under the provisions of O.C.G.A. Chapter 31-11 shall require conformance with all the requirements of these rules and regulations as upon original licensing.

(4) Air Ambulance Services must have appropriate and current Federal Aviation Administration (FAA) approval to operate an Air Ambulance Service or Helicopter Air Ambulance Operation, as defined in 14 CFR § 135.

(5) Standards for Air Ambulances

(a) General:

1. Air Ambulances must have appropriate and current FAA approval (pursuant to 14 CFR § 135 and other applicable federal regulations) to operate as an Air Ambulance;

2. Air Ambulances must be maintained on suitable premises that meet the county health code and the Department's specifications. The Department is authorized to establish policy to define minimal standards for suitable premises and base of operations.

3. The Air Ambulance must be properly equipped, maintained, and operated in accordance with other rules and regulations contained herein and be maintained and operated so as to contribute to the general well-being of patients. The aircraft must have an appropriate system for ensuring an adequate temperature environment suitable for patient transport.

4. All Air Ambulances must be equipped with approved safety belts and restraints for all seats.

5. Prior to use, Air Ambulances must be inspected and approved by the Department and so registered by affixing a Department decal at a location specified by the Department.

6. Prior to disposal by sale or otherwise, an Air Ambulance removed from service must be reported to the Department.

7. The Department shall utilize the airframe's "N" number issued by the FAA to identify each registered Air Ambulance.

8. Whenever an Air Ambulance Service utilizes an unregistered air ambulance as a backup air ambulance, the Air Ambulance Service must contact the Department within forty-eight hours of placing said air ambulance in service to provide the following information:

   (i) Make and model of aircraft,

   (ii) Number,

   (iii) Color and any descriptive markings, and

   (iv) Expected length of service.

(b) Insurance:

1. The Air Ambulance Service must have bodily injury, property damage, and professional liability insurance coverage that meets or exceeds 14 C.F.R. § 205.5.

2. No Air Ambulance shall be registered nor shall any registration be renewed unless the Air Ambulance has current insurance coverage as required by this section. A certificate of insurance or satisfactory evidence of self-insurance shall be submitted to the license officer for approval prior to the issuance or renewal of each Air Ambulance license or registration. Satisfactory evidence that such insurance is at all times in force and effect shall be furnished to the license officer, in such form as he may specify, by all licensees required to provide proof of such insurance under this section. Any lapse in insurance coverage will be grounds for immediate revocation of the Air Ambulance Service license.

3. Air Ambulance Services must maintain files as required by the FAA.

4. The Air Ambulance shall list the Georgia Office of EMS and Trauma as an additional certificate holder for the vehicle insurance with the insurance company.

(c) Service License Fee:

1. Every Air Ambulance Service, whether privately operated or operated by any political subdivision of the state or any municipality, as a condition of maintaining a valid license shall pay an annual license fee, to include an agency license fee and a per-ambulance license fee, in an amount to be determined by the Board of Public Health. The amount of said license fee may be periodically revised by said Board, and shall be due upon the initial issuance of the license and each year thereafter on the anniversary date of the initial license issuance.

(d) Communication:

1. Each registered Air Ambulance shall be equipped with a two-way communication system that provides air ambulance-to-hospital communications.

2. Each registered Air Ambulance shall have two-way communication with the location receiving requests for emergency service.

(e) Infectious Disease Exposure Control:

1. Each Air Ambulance Service shall have a written exposure control plan approved by their Medical Director.

2. Air Ambulance Services and Emergency Medical Services Personnel shall comply with all applicable local, state, and federal laws and regulations in regard to infectious disease control procedures.

(f) Equipment and Supplies:

1. All equipment and supplies must be maintained in working order and shall be stored in an orderly manner so as to protect the patient.

2. No supplies may be used after their expiration date.

3. In order to substitute any item for the required items, written approval must be obtained from the Department. The Department shall have authority to grant exceptions and substitutions and shall maintain and distribute an up-to-date policy listing of all approved exceptions and substitutions.

4. The Department shall establish through policy the minimum equipment and supplies required on each Air Ambulance; however, other equipment and supplies may be added as desired.

(6) General Provisions for Air Ambulance Services

(a) Each Air Ambulance while in service shall be staffed by two Georgia licensed healthcare providers:

1. When responding to an emergency scene at least one of the personnel shall be a registered nurse, physician's assistant, nurse practitioner, or physician and the second person must be a Paramedic, both of whom must be licensed in Georgia;

2. When responding for an interfacility transfer, at least one of the personnel shall be a registered nurse, nurse practitioner, physician's assistant, or physician and the second person must be at least a Paramedic or other non-EMS licensed healthcare provider as approved by either the transferring or receiving physician, both of whom must be licensed in Georgia;

3. Personnel shall have successfully completed training specific to the air ambulance environment;

4. Personnel shall neither be assigned, nor assume the cockpit duties of the flight crew members concurrent with patient care duties and responsibilities;

5. Personnel shall have documentation of successful completion of training specific to patient care in the air ambulance transport environment in

general and licensee's operation, in specific, as required by the Department; and

6. If a Paramedic possesses an additional Georgia healthcare provider license, then the Paramedic may perform to the higher level of training for which he or she is qualified under that license when directed to do so by a physician, either directly or by approved protocols.

(b) If an air ambulance transport is requested for an inter-hospital transfer, then such transfer shall be conducted by licensed Air Ambulance Services utilizing registered Air Ambulances.

(c) Air Ambulance Services shall be provided on a twenty-four hour a day, seven day a week basis unless weather or mechanical conditions prevent safe operations.

(d) Personnel shall be available at all times to receive emergency telephone calls and provide two-way communications.

(e) Medical Direction for Air Ambulance Services

1. The Air Ambulance Service Medical Director shall be a physician licensed to practice medicine in the state of Georgia and subject to approval by the Department. The Air Ambulance Service Medical Director must agree in writing to provide medical direction to that particular Air Ambulance Service.

2. The Air Ambulance Service Medical Director shall serve as medical authority for the Air Ambulance Service, serving as a liaison between the Air Ambulance Service and the medical community, medical facilities and governmental entities.

3. It will be the responsibility of the Air Ambulance Service Medical Director, to provide for medical direction, specifically to ensure there is a plan to provide medical oversight of patient care delivered by air medical personnel during transport, to include on-line medical control or off-line medical control (through written guidelines or policies) and also to participate in training for the air ambulance personnel, in conformance with acceptable air ambulance emergency medical practices and procedures.

4. Duties of the Air Ambulance Service Medical Director shall include, but not be limited to, the following:

   (i) The approval of policies and procedures affecting patient care;

   (ii) The development and approval of medical guidelines or protocols;

(iii) The formulation and evaluation of training objectives;

(iv) Continuous quality improvement of patient care.

5. All Air Ambulance personnel shall comply with appropriate policies, protocols, requirements, and standards of the Air Ambulance Service Medical Director, provided such policies and protocols are not in conflict with these Rules and Regulations, the Department-specified Scope of Practice, or other state statutes.

(f) Control of patient care at the scene of an emergency shall be the responsibility of the individual in attendance most appropriately trained and knowledgeable in providing prehospital emergency stabilization care and transportation. When a Medic arrives at the scene of a medical emergency, the Medic may act as an agent of a physician when a physician-patient relationship has been established.

1. For purposes of this section, a physician-patient relationship has been established when:

(i) A Medic utilizes medical control, either through direct on-line medical control or off-line medical control, by the use of medical protocols established by the local Medical Director; or

(ii) A physician is on the scene and demonstrates a willingness to assume responsibility for patient management or purports to be the patient's personal physician and the Medic takes reasonable steps to immediately verify the medical credentials of the physician.

2. Once a physician-patient relationship has been established, the Medic must follow the medical direction of that physician. In the event of a conflict between the medical direction given and the medical protocols established by the local Medical Director, the Medic should immediately contact their local Medical Director.

(g) Air Ambulance Services and applicants for Air Ambulance Services shall not misrepresent or falsify any information, applications, forms or data filed with or submitted to the Department.

(h) Air Ambulance Services shall not employ, continue in employment, or use as Medics any individuals who are not properly licensed under the applicable provisions of O.C.G.A. Chapter 31-11 and these rules and regulations.

(7) CLIA Certification

(a) All Air Ambulance Services must maintain current CLIA certification as a laboratory that is permitted to perform waived tests, as defined in 42 CFR § 493.2.

1. Documentation regarding this certification must be submitted to the Department in a manner and on forms specified by the Department.

Cite as Ga. Comp. R. & Regs. R. 511-9-2-.06
Authority: O.C.G.A. §§ 31-2A-3, 31-2A-6, 31-9-2, 31-9-3, 31-11-5 to 31-11-11, 31-11-30 to 31-11-36, 31-11-50 to 31-11-55, 31-11-60.1, 31-12-8.
History. Original Rule entitled "Licensure of Air Ambulance Services" adopted. F. December 14, 2011; eff. January 3, 2012.
Note: Correction of non-substantive typographical error in History, original Rule title "Licensure of Ground Ambulance Services" corrected to "Licensure of Air Ambulance Services." Effective May 17, 2016.
Amended: F. Apr. 27, 2016; eff. May 17, 2016.
Amended: F. Sep. 29, 2021; eff. Oct. 27, 2021, as specified by the Agency.

Rule 511-9-2-.07. Licensure of Ground Ambulance Services.

(1) Applicability.

(a) No person shall operate, advertise, or hold themselves out to be a Ground Ambulance Service in the state of Georgia without being in compliance with the provisions of O.C.G.A. Chapter 31-11 and these rules and regulations and without being duly licensed by the Department. However, this Rule shall not apply to the following:

1. An ambulance or ambulance service operated by an agency of the United States government;

2. A vehicle rendering assistance temporarily in the case of a major catastrophe, disaster, or public health emergency which is beyond the capabilities of available Georgia licensed ambulance services;

3. An ambulance operated from a location outside of Georgia and transporting patients picked up beyond the limits of Georgia to locations within Georgia;

4. An invalid car or the operator thereof.

5. An ambulance service licensed to operate in another state and transporting patients picked up at a medical facility within the limits of Georgia to locations outside the limits of Georgia unless such ambulance is pre-positioned within the limits of Georgia prior to receiving the request for transport.

(b) No provision of these rules shall be construed as prohibiting or preventing a municipality from fixing, charging, assessing or collecting any license fee or registration fee on any business or profession or anyone engaged in any related profession governed by the provisions of these rules, or from establishing additional regulations regarding Ground Ambulance Services as long as there is no conflict with these rules.

(2) Application for a license or provisional license shall be made in the manner and on the forms approved by the Department, to include at a minimum the name, address, email address, and employer identification number of the owner(s).

(3) Renewal of License. Renewal of any license issued under the provisions of O.C.G.A. Chapter 31-11 shall require conformance with all the requirements of these rules and regulations as upon original licensing.

(4) Standards for Ground Ambulances.

(a) General.

1. Ground Ambulances must be maintained on suitable premises that meet the Department's specifications. The Department is authorized to establish policy to define minimal standards for suitable premises and Base of Operations. Ground Ambulances, including raised roof van or modular type, must meet design and safety standards as approved by the Department. The interior of the patient compartment shall provide a minimum volume of 30 cubic feet of enclosed and shelf storage space that shall be conveniently located for medical supplies, devices, and installed systems as applicable for the service intended. The Ground Ambulance must be properly equipped, maintained, and operated in accordance with other rules and regulations contained herein and be maintained and operated so as to contribute to the general well-being of patients. Heat and air conditioning must be available and operational in both the patient compartment and driver compartment.

2. All Ground Ambulances must be equipped with approved safety belts for all seats.

3. Prior to their use, Ground Ambulances must be inspected and approved by the Department and so registered by affixing a Department decal at a location specified by the Department.

4. Each Ground Ambulance Service may place up to one-third (rounded to nearest whole number) of its registered Ground Ambulances in reserve status. When a Reserve Ambulance is placed in service (ready to respond to an emergency call) it must meet the provisions of these rules and policies of the Department.

5. Prior to disposal by sale or otherwise, a Ground Ambulance removed from service must be reported to the Department.

6. All registered Ground Ambulances shall have on both sides of the vehicle an identification number designated by the Department. The name of the Ground Ambulance Service and the vehicle identification number shall be visible on each side of the Ground Ambulance in at least 3-inch lettering for proper identification.

(b) Insurance:

1. Each registered Ground Ambulance shall have at least $1,000,000 combined single limit (CSL) insurance coverage.

2. No Ground Ambulance shall be registered nor shall any registration be renewed unless the Ground Ambulance has insurance coverage in force as required by this section. A certificate of insurance or satisfactory evidence of self-insurance shall be submitted to the license officer for approval prior to the issuance or renewal of each Ground Ambulance license. Satisfactory evidence that such insurance is at all times in force and effect shall be furnished to the Department in a manner and on forms specified by the Department, by all licensees required to provide proof of such insurance under this section. Any lapse in insurance coverage will be grounds for immediate revocation of the Ground Ambulance Service license.

3. Ground Ambulance Services must maintain a file, as defined in departmental policy, of all maintenance records on each vehicle registered by the Department.

4. The Ground Ambulance Service shall list the Georgia Office of EMS and Trauma as an additional certificate holder for the vehicle insurance with the insurance company.

(c) Service License Fee:

1. Every Ground Ambulance Service, whether privately operated or operated by any political subdivision of the state or any municipality, as a condition of maintaining a valid license shall pay an annual license fee, to include an agency license fee and a per-ambulance license fee, in an amount to be determined by the Board of Public Health. The amount of said license fee may be periodically revised by said Board, and shall be due upon the initial issuance of the license and each year thereafter on the anniversary date of the initial license issuance.

(d) Communication:

1. Each registered Ground Ambulance shall be equipped with a two-way communication system that provides ambulance-to-hospital communications.

2. All Ground Ambulance Services shall have two-way communication between each Ground Ambulance and the location receiving requests for emergency service.

(e) Infectious Disease Exposure Control:

1. Each Ground Ambulance Service shall have a written infectious disease exposure control plan approved by the local Medical Director.

2. Ground Ambulance Services and Emergency Medical Services Personnel shall comply with all applicable local, state, and federal laws and regulations in regard to infectious disease control procedures.

(f) Equipment and Supplies:

1. All equipment and supplies must be maintained in working order and shall be stored in an orderly manner so as to protect the patient and be readily accessible when needed.

2. No supplies may be used after their expiration date.

3. In order to substitute any item for the required items, written approval must be obtained from the Department. The Department shall have authority to grant exceptions and substitutions and shall maintain and distribute an up-to-date policy listing of all approved exceptions and substitutions.

4. The Department shall establish through policy the minimum equipment and supplies required on each Ground Ambulance; however, other equipment and supplies may be added as desired.

(5) General Provisions for Ground Ambulance Services.

(a) No person shall make use of the word "ambulance" to describe any ground transportation or facility or service associated therewith which such person provides, or to otherwise hold oneself out to be an ambulance service unless such person has a valid license issued pursuant to the provisions of this chapter or is exempt from licensing under this chapter.

(b) Each Ground Ambulance while transporting a patient shall be manned by not less than two Medics, one of whom must be in the patient compartment. If Advanced Life Support is being rendered, personnel qualified to administer the appropriate

level of Advanced Life Support must be in the patient compartment and responsible for patient care.

1. A Ground Ambulance may not be staffed by more than one (1) Emergency Medical Technician - Responder.

2. Emergency Medical Technician - Responders may not staff Ground Ambulances that routinely respond to Public Calls, unless:

   (i) The Emergency Medical Technician - Responder is also licensed as a registered nurse, nurse practitioner, physician assistant or physician; OR

   (ii) The Ground Ambulance Service provides all of the following on an annual basis to the Department in a manner and on forms specified by the Department:

      (a) An attestation that the staffing at the EMS Agency is currently insufficient to properly staff Ground Ambulances responding to Public Calls;

      (b) An attestation that the public welfare may be negatively affected if the Ground Ambulance Service is unable to use the Emergency Medical Technician - Responder license level to staff Ground Ambulances that respond to Public Calls; and

      (c) An attestation from the Ground Ambulance Medical Director that they fully support the use of Emergency Medical Technician - Responders on Ground Ambulances that respond to Public Calls for the Ground Ambulance Service.

3. Emergency Medical Technician - Responders who do not hold an additional Georgia license as a registered nurse, nurse practitioner, physician assistant or physician may not serve as the primary patient caregiver during patient transport on a Ground Ambulance.

(c) If a Medic possesses an additional Georgia healthcare provider license, then the Medic may perform to the higher level of training for which he or she is qualified under that license when directed to do so by a physician, either directly or by approved protocols.

(d) Interhospital transfers shall be conducted by licensed ambulance services in registered ambulances when the patient requires, or is likely to require, medical attention during transport. The transferring or receiving physician may request the highest level of Emergency Medical Services Personnel available or additional qualified medical personnel access to the patient during the interhospital transfer.

If requested, the ambulance service must allow the highest level medical personnel available to attend to the patient during the interhospital transfer.

(e) Ground Ambulance Services shall be provided on a twenty-four hour, seven day a week basis.

(f) Personnel shall be available at all times to receive emergency telephone calls and provide two-way communications.

(g) Sufficient licensed personnel shall be immediately available to respond with at least one Ground Ambulance. When the first Ground Ambulance is on a call, Ground Ambulance Services shall respond to each additional emergency call within their designated geographic territory as requested provided that Medics and a Ground Ambulance are available. If Medics and a Ground Ambulance are not available, the Ground Ambulance Service shall request mutual aid assistance. If mutual aid assistance is not available the Ground Ambulance Service shall respond with its next available Ground Ambulance.

(h) Medical Direction for Ground Ambulance Services.

1. To enhance the provision of emergency medical care, each Ground Ambulance Service shall have a Medical Director. The local Medical Director shall be a physician licensed to practice medicine in the state of Georgia and subject to approval by the Department. The local Medical Director must agree in writing to provide medical direction to that particular Ground Ambulance Service.

2. The local Medical Director shall serve as medical authority for the Ground Ambulance Service, serving as a liaison between the Ground Ambulance Service and the medical community, medical facilities and governmental entities.

3. It will be the responsibility of the local Medical Director to provide for medical direction and training for the ambulance service personnel in conformance with acceptable emergency medical practices and procedures.

4. Duties of the local Medical Director shall include but not be limited to the following:

   (i) The approval of policies and procedures affecting patient care;

   (ii) The formulation of medical protocols and communication protocols;

   (iii) The formulation and evaluation of training objectives;

   (iv) Performance evaluation;

(v) Continuous quality improvement of patient care; and

(vi) Development and implementation of policies and procedures for requesting air ambulance transport.

5. All Emergency Medical Services Personnel shall comply with appropriate policies, protocols, requirements, and standards of the local Medical Director for that Ground Ambulance Service, provided that such policies and protocols are not in conflict with these Rules and Regulations, the Department-specified Scope of Practice, or other state statutes.

(i) Control of patient care at the scene of an emergency shall be the responsibility of the individual in attendance most appropriately trained and knowledgeable in providing prehospital emergency care and transportation. When a Medic arrives at the scene of a medical emergency, the Medic may act as an agent of a physician when a physician-patient relationship has been established.

1. For purposes of this section, a physician-patient relationship has been established when:

(i) A Medic utilizes medical control, either through direct on-line medical control or off-line medical control, by the use of medical protocols established by the local Medical Director; or

(ii) A physician is on the scene and demonstrates a willingness to assume responsibility for patient management or purports to be the patient's personal physician and the Medic takes reasonable steps to immediately verify the medical credentials of the physician.

2. Once a physician-patient relationship has been established, the Medic must follow the medical direction of that physician. In the event of a conflict between the medical direction given and the medical protocols established by the local Medical Director, the Medic should immediately contact their local Medical Director.

(j) All licensed Ground Ambulance Services must adhere to all Regional Ambulance Zoning Plans approved by the Department. Any Ground Ambulance that arrives at the scene of an emergency without having been designated as responsible by the Regional Ambulance Zoning Plan, shall provide the emergency medical care necessary to sustain and stabilize the patient until the arrival of the designated Ground Ambulance Service. A non-designated EMS Agency shall not transport a patient from the scene of a medical emergency except under the following conditions:

1. The designated Ground Ambulance is canceled by the appropriate dispatching authority with express approval of the designated Ground Ambulance Service; or

2. Medical control determines that the patient's condition is life-threatening or otherwise subject to rapid and significant deterioration and there is clear indication that, in view of the estimated time of arrival of the designated Ground Ambulance, the patient's condition warrants immediate transport. In the event the Medic is unable to contact medical control, the Medic will make this decision. The transporting Ground Ambulance Service shall file a copy of the Patient Care Report to the Department in compliance with these rules, to include an explanation of the circumstances and the need for the non-designated Ground Ambulance Service to transport the patient.

(k) Hospital Destination of Prehospital Patients.

1. When a patient requires initial transportation to a hospital, the patient shall be transported by the ambulance service to the hospital of his or her choice provided:

   (i) The hospital chosen is capable of meeting the patient's immediate needs;

   (ii) The hospital chosen is within a reasonable distance as determined by the Medic's assessment in collaboration with medical control so as to not further jeopardize the patient's health or compromise the ability of the EMS system to function in a normal manner;

   (iii) The hospital chosen is within a usual and customary patient transport or referral area as determined by the local Medical Director; and

   (iv) The patient does not, in the judgment of the Medical Director or an attending physician, lack sufficient understanding or capacity to make a responsible decision regarding the choice of hospital.

2. If the patient's choice of hospital is not appropriate or if the patient does not, cannot, or will not express a choice, the patient's destination will be determined by pre-established guidelines. If for any reason the pre-established guidelines are unclear or not applicable to the specific case, then medical control shall be consulted for a definitive decision.

3. If the patient continues to insist on being transported to the hospital he or she has chosen, and it is within a reasonable distance as determined by the local Medical Director, then the patient shall be transported to that hospital

after notifying local medical control of the patient's decision. The choice of hospital for the patient may be selected pursuant to O.C.G.A. § 31-9-2.

4. If the patient does not, cannot, or will not express a choice of hospitals, the Ground Ambulance Service shall transport the patient to the nearest hospital believed capable of meeting the patient's immediate medical needs without regard to other factors, e.g., patient's ability to pay, hospital charges, county or city limits, etc.

(l) Ground Ambulance Services and applicants for Ground Ambulance Services shall not misrepresent or falsify any information, applications, forms or data filed with or submitted to the Department or completed as a result of any ambulance response.

(m) Ground Ambulance Services shall not employ, continue in employment, or use as Medics any individuals who are not properly licensed under the applicable provisions of O.C.G.A. Chapter 31-11 and these rules and regulations.

(6) CLIA Certification

(a) All Ground Ambulance Services must maintain current CLIA certification as a laboratory that is permitted to perform waived tests, as defined in 42 CFR § 493.2.

1. Documentation regarding this certification must be submitted to the Department in a manner and on forms specified by the Department.

Cite as Ga. Comp. R. & Regs. R. 511-9-2-.07
Authority: O.C.G.A. §§ 31-2A-3, 31-2A-6, 31-9-2, 31-9-3, 31-11-5 to 31-11-11, 31-11-30 to 31-11-36, 31-11-50 to 31-11-55, 31-11-60.1, 31-12-8, 40-6-6.
History. Original Rule entitled "Licensure of Ground Ambulance Services" adopted. F. December 14, 2011; eff. January 3, 2012.
Amended: F. Apr. 27, 2016; eff. May 17, 2016.
Amended: F. Apr. 24, 2018; eff. May 14, 2018.
Amended: F. Sep. 29, 2021; eff. Oct. 27, 2021, as specified by the Agency.

Rule 511-9-2-.08. Licensure of Neonatal Transport Services.

(1) Applicability.

(a) Any Ground Ambulance Service may utilize a registered and approved Ground Ambulance for the transport of Neonates.

(b) Any Air Ambulance Service may utilize a registered and approved Air Ambulance for the transport of Neonates.

(c) No person shall operate, advertise, or hold themselves out to be a licensed Neonatal Transport Service, or advertise as such without meeting the following requirements and without being duly licensed by the Department. However, the provisions of this chapter shall not apply to any neonatal transport vehicle operated by an agency of the United States government.

(2) Application for a license or provisional license shall be made to the license officer in the manner and on the forms prescribed by the Department, to include at a minimum the name, address, email address, and employer identification number of the owner(s).

(3) License Fee.

(a) As a condition of maintaining a valid license, every Neonatal Transport Service, whether privately operated or operated by any political subdivision of the state or any municipality, shall pay an annual license fee, to include an agency license fee and a per-ambulance license fee, in an amount to be determined by the Board of Public Health. The license fee may be periodically revised by the Board, and shall be due upon the initial issuance of the license and each year thereafter on the anniversary date of the initial license issuance.

1. This fee shall not be applicable in cases where the provider is also licensed as a Ground Ambulance Service, uses the vehicles for dual-purposes, and pays the fee under the Ground Ambulance Service license.

(4) Renewal of License. Renewal of any license issued under the provisions of these rules shall require conformance with all the requirements of these rules as upon original licensing.

(5) Standards for Neonatal Transport Vehicles.

(a) General.

1. A registered Neonatal Transport Vehicle is a special type of vehicle and must be maintained on suitable premises that meet the county health code and the Department's specifications. The Department is authorized to establish policy to define minimum standards for suitable premises and Base of Operations.

2. The registered Neonatal Transport Vehicle must be properly equipped, maintained, and operated in accordance with these rules and regulations so as to contribute to the general well-being of patients. Heat and air conditioning must be available and operational in both the patient compartment and driver compartment.

3. The Neonatal Transport Vehicle must have sufficient floor space to accommodate two neonatal transport isolettes and a crew of three in the patient compartment.

4. Each Neonatal Transport Vehicle must be equipped with an electrical generator of at least 3.0 kilowatt output and an electrical inverter or motor generator of at least 1000 watts capacity.

5. There must be at least one compressed air outlet and one oxygen outlet available to each isolette.

6. There must be at least one duplex electrical outlet available to each isolette.

7. There must be at least one electrical wall-mounted suction outlet in the vehicle.

8. All registered Neonatal Transport Vehicles must be equipped with approved safety belts for all seats.

9. Registered Neonatal Transport Vehicles must be inspected and approved by the Department and so designated by affixing a Department decal at a location specified by the Department.

10. Prior to disposal by sale or otherwise, a registered Neonatal Transport Vehicle removed from service must be reported to the Department.

11. All registered Neonatal Transport Vehicles shall have on both sides of the vehicle an identification number designated by the Department. The name of the service and the number shall be visible on each side of the vehicle in at least 3-inch lettering for proper identification. In addition each vehicle shall have the words "neonatal" or "neonatal transport" prominently displayed on each side of the vehicle.

(b) Insurance.

1. Every registered Neonatal Transport Vehicle shall have at least $1,000,000 combined single limit (CSL) insurance coverage.

2. No Neonatal Transport Vehicle shall be registered nor shall any registration be renewed unless the vehicle has insurance coverage in force as required by this section. A certificate of insurance or satisfactory evidence of self-insurance shall be submitted to the license officer for approval prior to the issuance or renewal of each Neonatal Transport Service license. Satisfactory evidence that such insurance is at all times in force and effect shall be furnished to the license office, in such form as the license officer may

specify, by all licensees required to provide proof of such insurance under this section. Any lapse in insurance coverage will be grounds for immediate revocation of the neonatal transport service license.

3. Neonatal Transport Services must maintain a file, as defined in departmental policy, of all maintenance records on each vehicle registered by the Department.

4. The Neonatal Transport Service must list the Georgia Office of EMS and Trauma as an additional certificate holder for the vehicle insurance with the insurance company.

(c) Communication.

1. Each registered Neonatal Transport Vehicle shall be equipped with a two-way communication system that provides ambulance-to-hospital communications.

(d) Infectious Disease Exposure Control.

1. Each Neonatal Transport Service shall have a written infectious disease exposure control plan approved by the local medical director.

2. Neonatal Transport Services and Emergency Medical Services Personnel shall comply with all applicable local, state and federal laws and regulations in regard to infectious disease control procedures.

(e) Equipment and Supplies.

1. All equipment and supplies must be maintained in working order and shall be stored in an orderly manner so as to protect the patient and shall be readily accessible when needed.

2. Supplies may not be used after their expiration date.

3. In order to substitute any item from the required items, written approval must be obtained from the Department. The Department shall have authority to grant exceptions and substitutions and shall maintain and distribute an up-to-date policy listing of all approved exceptions and substitutions.

4. Vehicles approved to operate as both a Neonatal Transport Vehicle and a Ground Ambulance must be inspected as both.

5. The Department shall establish through policy the minimum equipment and supplies required for each neonatal transport unit while being used to transport Neonates; however, other equipment may be added as desired.

(f) Supplies and Medications.

1. The types and quantities of supplies and medications to be carried in the vehicle while being used to transport neonates shall be determined by the Medical Director of the Neonatal Transport Service in conformance with current medical standards of care in the treatment and transportation of neonates.

2. A listing of the supplies and medications shall be updated at least annually and signed by the Medical Director and a copy thereof is to be in the vehicle at all times. This list shall be used for any inspection purposes by the Department.

(g) Personnel.

1. Neonatal Transport Personnel shall function under protocols developed by the Medical Director.

2. Neonatal Transport Personnel with appropriate skills to treat and transport a neonate must be in the patient compartment during transport. Documentation attesting to their qualifications shall be signed by the local Medical Director and on file at the base location.

3. The driver of the vehicle shall be a Georgia licensed Medic.

4. A minimum of two patient care personnel shall be in the patient compartment and shall consist of any combination of the following during initial transport to the tertiary care center as determined by the local Medical Director:

   (i) Paramedic;

   (ii) Registered Nurse;

   (iii) Respiratory Care Technician;

   (iv) Physician's Assistant; or

   (v) Physician.

   Only one of the above shall be required in the patient compartment during transport back to the initial referring facility.

(6) General Provisions.

(a) The local Medical Director shall be a physician licensed to practice medicine in the state of Georgia, be a member of the staff of the neonatal intensive care facility

from which the service originates or with which the service is contracted, and provide medical direction for the Neonatal Transport Service.

(b) Neonatal Transport Services shall be provided on a twenty-four hour, seven day a week basis.

(c) Neonatal Transport Services and applicants for Neonatal Transport Services shall not misrepresent or falsify any information, applications, forms or data filed with or submitted to the Department or completed as a result of any ambulance response.

(7) CLIA Certification

(a) All Neonatal Transport Services must maintain current CLIA certification as a laboratory that is permitted to perform waived tests, as defined in 42 CFR § 493.2.

1. Documentation regarding this certification must be submitted to the Department in a manner and on forms specified by the Department.

Cite as Ga. Comp. R. & Regs. R. 511-9-2-.08
Authority: O.C.G.A. §§ 31-2A-3, 31-2A-6, 31-11-5 to 31-11-7, 31-11-9, 31-11-30 to 31-11-36, 31-11-50, 31-11-53.1, 31-11-60.1, 31-12-8, 40-6-6.
History. Original Rule entitled "Licensure of Neonatal Transport Services" adopted. F. December 14, 2011; eff. January 3, 2012.
Amended: F. Apr. 27, 2016; eff. May 17, 2016.
Amended: F. Sep. 29, 2021; eff. Oct. 27, 2021, as specified by the Agency.

Rule 511-9-2-.09. Licensure of Medical First Responder Services.

(1) Applicability.

(a) No person shall operate, advertise, or hold themselves out to be a Medical First Responder Service, or advertise as such in the state of Georgia without first meeting the following requirements and being duly licensed by the Department.

(b) However, the provisions of this chapter shall not apply to:

1. Any first responder unit operated by an agency of the United States government.

2. Any rescue organization licensed by the Georgia Emergency Management and Homeland Security Agency, including its individual members.

3. Any person or designated first responder unit directly requested to the scene of an emergency by an appropriate public safety agency or ambulance

service for the purpose of rendering on-site care, rescue or extrication, until the arrival of a duly licensed Ground Ambulance Service, Air Ambulance Service, or duly licensed Medical First Responder Service. This includes agencies routinely requested to the scene in this manner that cannot or choose not to meet the requirements of these rules.

4. Any supervisory vehicle of a licensed ambulance service.

5. A person rendering assistance temporarily in the case of a major catastrophe, disaster, or public health emergency which is beyond the capability of licensed Medical First Responder Services or licensed Ground Ambulance Services.

(2) Application for a License. Application for a license or provisional license shall be made to the license officer in the manner and on the forms approved by the Department to include at a minimum the name, address, email address, and employer identification number of the owner(s).

(3) Renewal of License. Renewal of any license issued under the provisions of the rules shall require conformance with all the requirements of these rules as upon original licensing.

(4) Standards for Medical First Responder Vehicles.

(a) General.

1. Registered Medical First Responder Vehicles must be maintained on suitable premises that meet the county health code and the Department's specifications. The Department is authorized to establish policy to define minimum standards for suitable premises and base of operations. The registered Medical First Responder Vehicle must be properly equipped, maintained, and operated in accordance with other Rules and Regulations contained herein.

2. All registered Medical First Responder Vehicles must be equipped with approved safety belts for all seats.

3. Registered Medical First Responder Vehicles must be inspected and approved by the Department and so designated by affixing a Department decal at a location specified by the Department.

4. Prior to disposal by sale or otherwise, a registered Medical First Responder Vehicle removed from service must be reported to the Department.

(b) Insurance.

1. Every registered Medical First Responder Vehicle shall have at least $1,000,000 combined single limit (CSL) insurance coverage.

2. No Medical First Responder Vehicle shall be registered nor shall any registration be renewed unless the vehicle has insurance coverage in force as required by this section. A certificate of insurance or satisfactory evidence of self-insurance shall be submitted to the license officer for approval prior to the issuance or renewal of each Medical First Responder Service license. Satisfactory evidence that such insurance is at all times in force and effect shall be furnished to the Department, in a manner and on forms specified by the Department, by all licensees required to provide proof of such insurance under this section. Any lapse in insurance coverage will lead to immediate revocation of the Medical First Responder Service license.

3. Medical First Responder Services must maintain a file, as defined in departmental policy, of all maintenance records on each vehicle registered by the Department.

4. The Medical First Responder Service must list the Georgia Office of EMS and Trauma as an additional certificate holder for the vehicle insurance with the insurance company.

(c) Communication.

1. All Medical First Responder Services shall have two-way communication between the vehicle and the location receiving requests for emergency service.

(d) Infectious Disease Exposure Control.

1. Each Medical First Responder Service shall have a written infectious disease exposure control plan approved by the local Medical Director.

2. Medical First Responder Services and Emergency Medical Services Personnel shall comply with all applicable local, state and federal laws and regulations in regard to infectious disease control procedures.

(e) Equipment and Supplies.

1. All equipment and supplies must be maintained in working order and shall be stored in an orderly manner and shall be readily accessible when needed.

2. Supplies may not be used after their expiration date.

3. In order to substitute any item from the required items written approval must be obtained from the Department. The Department shall have authority to grant exceptions and substitutions and shall maintain and distribute an up-to-date policy listing of all approved exceptions and substitutions.

4. The Department shall through policy establish the minimum equipment and supplies required on Medical First Responder Vehicles; however, other equipment and supplies may be added as desired.

(5) General Provisions: Medical First Responder Services.

(a) Each registered Medical First Responder Vehicle when on an emergency call shall be manned by at least one Medic. If Advanced Life Support is being rendered, there must be at least one Emergency Medical Technician - Intermediate, Advanced Emergency Medical Technician, Cardiac Technician or Paramedic responsible for patient care.

(b) Medical First Responder Services shall be provided on a twenty-four hour, seven day a week basis.

(c) Personnel shall be available at all times to receive emergency telephone calls and provide two-way communications.

(d) Sufficient licensed personnel shall be immediately available to respond with at least one registered Medical First Responder Vehicle. When the first registered Medical First Responder Vehicle is on a call, Medical First Responder Services shall respond to each additional emergency call within their designated geographic territory as requested providing a Medic and a registered Medical First Responder Vehicle are available. If a Medic and a registered Medical First Responder Vehicle are not available, the Medical First Responder Service shall request mutual aid assistance. If mutual aid assistance is not available the Medical First Responder Service shall respond with its next available registered Medical First Responder Vehicle.

(e) The driver of a registered Medical First Responder Vehicle, when responding to an emergency call, is authorized to operate the vehicle as an emergency vehicle pursuant to the provisions of O.C.G.A. § 40-6-6.

(f) Medical Direction for Medical First Responder Services.

1. To enhance the provision of emergency medical care, each Medical First Responder Service shall be required to have a Medical Director. The Medical Director shall be a physician licensed to practice medicine in this state and subject to approval by the Department. The local Medical Director

must agree in writing to provide medical direction to that particular Medical First Responder Service.

2. The local Medical Director shall serve as the medical authority for the Medical First Responder Service, serving as a liaison between the service and the medical community, medical facilities and governmental entities.

3. It will be the responsibility of the local Medical Director to provide medical direction and training for the Medical First Responder Service personnel in conformance with acceptable emergency medical practices and procedures.

4. Duties of the local Medical Director shall include but not be limited to the following:

   (i) The approval of policies and procedures affecting patient care;

   (ii) The formulation of medical protocols and communication protocols;

   (iii) The formulation and evaluation of training objectives;

   (iv) Performance evaluation;

   (v) Continuous quality improvement of patient care; and

   (vi) Development and implementation of policies and procedures for requesting air ambulance transport.

5. The Medical Director of a Medical First Responder Service must coordinate the medical protocols and procedures of the service with the Medical Director of the designated Ground Ambulance Service in the Regional Ambulance Zoning Plan.

6. All Emergency Medical Services Personnel shall comply with appropriate policies, protocols, requirements, and standards of local Medical Director for that service, provided that such policies and protocols are not in conflict with these Rules and Regulations, the Department-specified Scope of Practice, or other state statutes.

(g) Control of patient care at the scene of an emergency shall be the responsibility of the individual in attendance most appropriately trained and knowledgeable in providing prehospital emergency care and transportation. When a Medic arrives at the scene of a medical emergency, the Medic may act as an agent of a physician when a physician-patient relationship has been established.

1. For purposes of this section, a physician-patient relationship has been established when:

(i) A Medic utilizes medical control, either through direct on-line medical control or off-line medical control, by the use of medical protocols established by the local Medical Director; or

(ii) A physician is on the scene and demonstrates a willingness to assume responsibility for patient management or purports to be the patient's personal physician and the Medic takes reasonable steps to immediately verify the medical credentials of the physician.

2. Once a physician-patient relationship has been established, the Medic must follow the medical direction of that physician. In the event of a conflict between the medical direction given and the medical protocols established by the local Medical Director, the Medic should immediately contact their local Medical Director.

(h) Medical First Responder Services and applicants for Medical First Responder Services shall not misrepresent or falsify any information, applications, forms or data filed with or submitted to the Department.

(i) Medical First Responder Services shall not employ, continue in employment, or use as Medics, individuals who are not properly licensed under the applicable provisions of O.C.G.A. Chapter 31-11 and these Rules and Regulations.

(j) Medical First Responder Services are required to notify the dispatch center designated by the Regional Ambulance Zoning Plan as responsible for distributing Ground Ambulance calls prior to departure on any direct calls received.

(6) CLIA Certification

(a) All Medical First Responder Services must maintain current CLIA certification as a laboratory that is permitted to perform waived tests, as defined in 42 CFR § 493.2.

1. Documentation regarding this certification must be submitted to the Department in a manner and on forms specified by the Department.

2. Medical First Responder Services who do not hold additional licensure as a Ground Ambulance Service, Air Ambulance Service, or Neonatal Transport Service, shall be exempt from the requirement to maintain a current CLIA certificate, provided that:

(i) The Medical First Responder Service submits an attestation that no Medic or other person employed by or acting on behalf of the Medical First Responder Service will be permitted to examine

materials derived from the human body for the purpose of providing information for the diagnosis, prevention, or treatment of any disease or impairment of, or the assessment of the health of, human beings.

Cite as Ga. Comp. R. & Regs. R. 511-9-2-.09
Authority: O.C.G.A. §§ 31-2A-3, 31-2A-6, 31-11-5 to 31-11-7, 31-11-30 to 31-11-36, 31-11-50, 31-11-53 to 31-11-55, 31-11-59, 31-11-60, 31-11-60.1, 31-12-8, 40-6-6.
History. Original Rule entitled "Licensure of Medical First Responder Services" adopted. F. December 14, 2011; eff. January 3, 2012.
Amended: F. Apr. 27, 2016; eff. May 17, 2016.
Amended: F. Sep. 29, 2021; eff. Oct. 27, 2021, as specified by the Agency.

Rule 511-9-2-.10. Procurement, Control, Handling, and Accountability of Pharmaceuticals.

(1) Procurement of Pharmaceuticals. Medical directors of licensed ambulance services, medical first responder services, or neonatal transport services are authorized to contract with Georgia licensed pharmacies to furnish dangerous drugs and controlled substances for the vehicles of their particular services. Such dangerous drugs and controlled substances shall be furnished, secured, and stored in the manner provided for in O.C.G.A. § 26-4-116.

(2) Storage of Pharmaceuticals. Pharmaceuticals shall not be left unattended on vehicles unless such vehicles are maintained in environmentally controlled facilities, or the pharmaceuticals are kept in environmentally controlled boxes in the patient compartment or in the patient compartment when the compartment is maintained at a temperature within the range specified by pharmaceutical manufacturers, and such vehicles are locked. Pharmaceuticals shall not be left outside of kits on open shelves or compartments. Narcotics must be maintained in accordance with Georgia Pharmacy Regulations. The theft of any pharmaceuticals must be reported immediately to the proper local and state authorities, as well as to the department.

(3) Accountability of Pharmaceuticals. All licensed emergency medical services must have a written policy, signed by the administrative director of the EMS, the local medical director of the EMS, and the pharmacist from whom pharmaceuticals are obtained. The policy shall address at a minimum the following areas: procurement, par levels, receiving, storage, distribution, accountability, inventory check frequency, waste/expiration, handling of inventory discrepancies, and other issues deemed important by any of the signees.

Cite as Ga. Comp. R. & Regs. R. 511-9-2-.10
Authority: O.C.G.A. §§ 26-4-116, 31-2A-3, 31-2A-6, 31-11-5, 31-11-6, 31-11-9, 31-11-34, 31-11-53 to 31-11-55, 31-11-59, 31-11-60, 31-11-60.1.

History. Original Rule entitled "Procurement, Control, Handling, and Accountability of Pharmaceuticals" adopted. F. December 14, 2011; eff. January 3, 2012.
Note: Correction of non-substantive typographical error in History, original Rule titled "Purpose" corrected to "Procurement, Control, Handling, and Accountability of Pharmaceuticals." Effective May 17, 2016.

Rule 511-9-2-.11. Inspections of EMS Agencies.

(1) The Department and its duly authorized agents shall be permitted to enter upon and inspect licensed EMS Agencies, including registered vehicles, other agency owned vehicles that resemble a first responder vehicle or ambulance, facilities, records applicable to licensure, including but not limited to call logs, vehicle maintenance records, patient care reports, communication tapes, and personnel licensing records in a reasonable manner in regards to the operation of Emergency Medical Services. The Department is authorized to set policy for such inspections and records. EMS Agencies shall permit scheduled and unscheduled inspections by the Department and its duly authorized agents.

(2) When the Department conducts an inspection, the findings shall be recorded on an inspection report form provided for this purpose. The authorized representative of the EMS Agency shall sign a form acknowledging the inspection. Signing this form does not indicate agreement with the findings thereon. A copy or electronic version of the inspection form shall be furnished to the EMS Agency within ten business days.

(a) EMS Agencies or those applying to be an EMS Agency whose Ground Ambulance(s), Air Ambulance(s) or Neonatal Transport Vehicle(s) is/are unable to fully pass the Department-specified inspection and is/are unable to become compliant before the assigned Department personnel depart(s) the inspection site, shall have the inspection(s) recorded as (a) failed inspection(s) and shall be subject to a re-inspection fee for each re-inspection of that/those ambulance(s)/vehicle(s). A subsequent inspection for that/those Ground Ambulance(s), Air Ambulance(s), or Neonatal Transport Vehicle(s) will not be performed until the re-inspection fee is received by the Department. Re-inspection fees will be as follows:

1. For the first re-inspection of a Ground Ambulance, Air Ambulance, or Neonatal Transport Vehicle, the re-inspection fee will be equal to ten percent (10%) of the Department-specified annual Ground Ambulance/Air Ambulance/Neonatal Transport Vehicle license fee.

2. For the second and subsequent re-inspection(s) of a Ground Ambulance, Air Ambulance, or Neonatal Transport Vehicle, the re-inspection fee will be equal to twenty-five percent (25%) of the Department-specified annual Ground Ambulance/Air Ambulance/Neonatal Transport Vehicle license fee.

(3) Inspections of pharmaceuticals will be handled in accordance with policies established by the Department and state and federal laws and regulations where applicable.

Cite as Ga. Comp. R. & Regs. R. 511-9-2-.11
Authority: O.C.G.A. §§ 31-2A-3, 31-2A-6, 31-11-5, 31-11-6, 31-11-9, 31-11-30 to 31-11-36.
History. Original Rule entitled "Inspections of Ambulance Services, Air Ambulance Services, Neonatal Transport Services, and Medical First Responder Services" adopted. F. December 14, 2011; eff. January 3, 2012.
Amended: F. Apr. 27, 2016; eff. May 17, 2016.
Amended: New title "Inspections of EMS Agencies." F. Sep. 29, 2021; eff. Oct. 27, 2021, as specified by the Agency.

Rule 511-9-2-.12. Licensure of Emergency Medical Services Personnel.

(1) No person shall practice or hold themselves out as an Emergency Medical Technician - Responder, Emergency Medical Technician, Emergency Medical Technician - Intermediate, Advanced Emergency Medical Technician, Cardiac Technician, or Paramedic without being licensed by the Department.

(2) Prior to licensure, all applicants must be certified by the National Registry of Emergency Medical Technicians (NREMT) at the level for which they are applying, or must be certified by the United States Special Operations Command (USSOCOM) as an Advanced Tactical Practitioner (ATP).

(3) All applicants for licensure must provide information to the Department in a manner and on forms specified by the Department, to include at a minimum the name, home address, mailing address, email address, phone number, date of birth and social security number of the applicant.

(4) Applicants shall not misrepresent or falsify any information on forms, applications, or documents filed with or submitted to the Department for the purpose of licensure or any other purpose specified in these rules.

(5) The Department may refuse to issue a license to an applicant who has been subject to disciplinary action imposed by another state or lawful licensing or certifying authority.

(6) All applicants for licensure must submit to a fingerprint based criminal history records check from the Georgia Crime Information Center (GCIC) and the Federal Bureau of Investigation (FBI).

   (a) Fingerprints shall be in such form and of such quality as prescribed by the Department, the GCIC and under standards adopted by the FBI.

   (b) Fees may be charged as necessary to cover the costs of the records search.

(7) Fees.

   (a) All applications for initial licensure must be accompanied by a fee payable to the Department in an amount and form determined by the Department.

   (b) Fees are not refundable after being submitted.

(8) Licensing of Individuals with Criminal History.

(a) The Department shall deny any license application submitted by an applicant who has been convicted of a felony, a crime of violence, or a crime of moral turpitude; and, may deny any license application submitted by an applicant who has been convicted of driving under the influence or possession of a controlled substance.

(b) The Department may deny any license application submitted by an applicant with unresolved criminal charges, whether initiated by arrest warrant, information, accusation, or indictment. This subsection shall not apply to minor traffic offenses.

(c) At its discretion, the Department may reconsider an application subject to subsections (a) or (b) above on the ground that;

1. The conviction has been set aside, pardoned, expunged, or overturned on appeal;

2. The criminal charges were finally resolved in the applicant's favor through acquittal, dismissal, or nolle prosequi; or

3. The applicant has demonstrated significant efforts toward rehabilitation, such that the applicant can be trusted with the care of sick or injured patients, their property, and the equipment and supplies that may be entrusted to him or her.

(9) Any currently licensed Medic may voluntarily surrender their Medic license by notifying the Department in a manner and on forms specified by the Department. Once processed by the Department, surrenders are not reversible, and the individual would need to complete the current Department-specified application process and meet all licensing requirements to obtain a new Medic license.

(10) Upon request, the Department shall be authorized to place a Medic license in retired status after which the individual will be permitted to continue to use the former licensure level title and number with "(Ret.)" after it. An individual in retired status will not be licensed to perform the duties of a Medic as defined in these rules. Applications for license retirement shall be submitted in a manner and on forms specified by the Department and must be submitted by the Medic themselves. Once processed by the Department, retirements are not reversible, and the individual would need to complete the current Department-specified application process and meet all licensing requirements to obtain a new Medic license. Eligibility requirements for retirement of a Medic license are as follows:

(a) The individual must be currently licensed as a Georgia Medic, and the Medic license must be in Good Standing at the time of application; and

(b) The individual must have a minimum of 15 years of continuous uninterrupted licensure as a Georgia Medic, inclusive of the date of application.

(11) Upon request from the next of kin to place a Medic license in deceased status and obtain a certificate of active service for an individual who dies while currently licensed in Good Standing as a Georgia Medic, the Department shall be authorized to place the respective Medic license in deceased status and provide a certificate of service to the next of kin. The request shall be accompanied by a certified death certificate or other documents recognized by the Department.

(12) Downgrades of Medic Licenses. Currently licensed Medics in Good Standing who hold a non-provisional license at the EMT level or higher may voluntarily request the Department to downgrade their Medic license. The request shall be made to the Department in a manner and on forms specified by the Department and shall indicate the requested new level of license. Once processed by the Department, downgrades are not reversible, and the Medic would need to complete the current Department-specified application process and meet all licensing requirements to obtain a higher level of Medic license.

(a) Permitted downgrades are as follows:

1. Currently licensed Paramedics and Cardiac Technicians in Good Standing will be permitted to request a downgrade to the AEMT, EMT, or EMT-R levels.

2. Currently licensed AEMTs and EMT-Is in Good Standing will be permitted to request a downgrade to the EMT or EMT-R levels.

3. Currently licensed EMTs in Good Standing will be permitted to request a downgrade to the EMT-R level.

(b) Applications for downgrade must be accompanied by the following:

1. A fingerprint based criminal history records check from the Georgia Crime Information Center (GCIC) and the Federal Bureau of Investigation (FBI), as described in paragraph (6) of this rule, and subject to paragraph (8) of this rule; and

2. An application fee, as described in paragraph (7) of this rule.

Cite as Ga. Comp. R. & Regs. R. 511-9-2-.12
Authority: O.C.G.A. §§ 31-2A-3, 31-2A-6, 31-11-5, 31-11-51, 31-11-52, 31-11-56.
History. Original Rule entitled "Licensure of Emergency Medical Services Personnel" adopted. F. December 14, 2011; eff. January 3, 2012.
Amended: F. Apr. 27, 2016; eff. May 17, 2016.
Amended: F. Sep. 29, 2021; eff. Oct. 27, 2021, as specified by the Agency.

Rule 511-9-2-.13. Licensure Renewal for Emergency Medical Services Personnel.

(1) Licensed Emergency Medical Services Personnel, on a schedule and in the manner established by the Department, shall submit an application and a non-refundable license renewal fee pursuant to these rules.

(a) The continuing education requirement for Emergency Medical Technicians, Emergency Medical Technician - Intermediates, Advanced Emergency Medical Technicians, Cardiac Technicians, and Paramedics shall be met by completing Department-approved or Department-recognized continuing education of not less than forty contact hours for each twenty-four month period of the license renewal cycle, with subject matter that includes cardiac care, pediatric care and trauma care. All continuing education must be consistent with the appropriate level EMS course curriculum or above. Training to maintain CPR certification shall be in addition to the continuing education requirement. For Cardiac Technicians and Paramedics, training to maintain ACLS or equivalent shall be in addition to the forty required biennial hours of continuing education.

(b) The continuing education requirement for Emergency Medical Technician - Responders shall be met by completing Department-approved or Department-recognized continuing education of not less than sixteen (16) hours for each twenty-four month period of the license renewal cycle, with subject matter that includes training to maintain CPR certification and all modules and hour requirements specified in the current EMR National Continued Competency Program (NCCP) specified by the National Registry of EMTs (NREMT). All continuing education must be consistent with the appropriate level EMS course curriculum or above.

(c) Continuing education that meets the requirements of this section must be approved in writing or electronic correspondence by the Department or must be recognized by the Department. All approved continuing education must be assigned an approval number by the Department and that number must be included on the course certificate of completion. All continuing education must comply with the continuing education policies of the Department.

(d) Licensed Emergency Medical Services personnel shall document all continuing education in a manner and on forms specified by the Department.

(2) Emergency Medical Technician - Responders shall be required to maintain current EMR certification through the National Registry of EMTs throughout the renewal period. Prior to renewal of an Emergency Medical Technician - Responder license, the licensee's certification through the National Registry of Emergency Medical Technicians shall be renewed.

(3) The Department is authorized to perform random audits of license renewal documentation during each license renewal cycle.

(4) Late renewal is permitted during the six-month period immediately following the expiration date for the last license renewal cycle. Licenses that are not renewed prior to

the expiration date are considered to be lapsed, and must be renewed in order for previously licensed individuals to perform the duties and services of a licensee. During this six-month period, a penalty fee for late renewal applies. The penalty fee shall be double the established fee for the level of licensure. After that six-month period, the license will have permanently lapsed and the individual must apply for licensure as a new applicant in accordance with Regulation 511-9-2-.12.

(5) The Department has the authority to mandate a specific license renewal cycle and continuing education modules.

(6) The Department shall be authorized to waive the continuing education requirements in cases of hardship, disability, illness, military deployment or under such other circumstances as the Department deems appropriate.

Cite as Ga. Comp. R. & Regs. R. 511-9-2-.13
Authority: O.C.G.A. §§ 31-2A-3, 31-2A-6, 31-7-2, 31-7-2.1, 31-11-1, 31-11-5, 31-11-51, 31-11-52, 31-11-53.1, 31-11-56 to 31-11-58, 31-11-58.1.
History. Original Rule entitled "Licensure Renewal for Emergency Medical Services Personnel" adopted. F. December 14, 2011; eff. January 3, 2012.
Amended: F. Apr. 27, 2016; eff. May 17, 2016.
Amended: F. Sep. 29, 2021; eff. Oct. 27, 2021, as specified by the Agency.

Rule 511-9-2-.14. Mandatory Reporting Requirements for EMS Agencies and Medics.

(1) All EMS Agencies shall comply with all federal, state and local data reporting requirements, including all data reporting requirements in these Rules.

(2) Data Management Policy

(a) Each EMS Agency that is not contracting out all its requested responses to another EMS Agency is required to have and maintain a Data Management Policy that conforms to the requirements specified by the Department.

1. Each individual that serves as a crew member on any vehicle registered by the EMS Agency shall comply with the EMS Agency's Data Management Policy, provided that the EMS Agency's Data Management Policy is not in conflict with these rules or the policies of the Department.

2. The Data Management Policy must be submitted in a timeframe and manner specified by the Department and on forms specified by the Department.

(3) EMS Responses

(a) EMS Agencies shall maintain a dispatch record on all calls received. The dispatch record shall be made available to the Department within twenty-four (24) hours of a request from the Department, and the record shall be maintained for a minimum of three years and shall contain at a minimum, when applicable, but not be limited to, the following:

1. Date call received;
2. Time call received;
3. Source of call;
4. Call back telephone number;
5. Location of patient;
6. Apparent problems;
7. Unit (unit number, GA EMS Vehicle ID number);
8. Crew dispatched;
9. Time of dispatch;
10. Time arrived at scene;
11. Time left scene;
12. Time arrived at transferring facility;
13. Time left transferring facility;
14. Time arrived at patient's destination or receiving facility; and
15. Destination of patient.

(b) Electronic Patient Care Reports (ePCRs)

1. ePCRs shall be completed for each response made by any vehicle, crew, or Medic for each EMS Agency, as follows:

   (i) For responses with no patient present, the ePCR shall be entered into the EMS Agency's ePCR software system by one of the crew members present on the responding vehicle before the end of the current work shift for the responding crew member(s).

(ii) For responses with one or more patients present, an ePCR for each patient present shall be entered into the EMS Agency's ePCR software system by the primary patient caregiver (of the responding crew for the respective EMS Agency and the respective patient) before the end of the current work shift for the primary patient caregiver for that respective EMS Agency and specific patient.

(a) If the primary patient caregiver is unable to enter or complete the ePCR prior to the end of the current scheduled work shift for the primary patient caregiver due to acute injury, illness, or death, the EMS Agency shall assign the ePCR entry and completion to another employee of the respective EMS Agency. ePCRs completed pursuant to this paragraph shall be entered into the EMS Agency's ePCR software system and completed within 24 hours of call completion.

(iii) The individual entering and completing an ePCR is responsible for ensuring that each ePCR is factual and accurate and compliant with the Department's data requirements related to data version, transmission, format, accuracy, completeness, uniformity, integration, validity and accessibility.

2. EMS Agencies shall electronically submit all ePCRs to the Department within 24 hours of call completion, and each submission shall comply with the Department's data submission requirements related to data version, transmission, format, accuracy, completeness, uniformity, integration, validity and accessibility.

3. In the event of a failure of the EMS Agency's ePCR software or the hardware used to access the software, the responding Medics must complete a paper PCR that is accurate and factual and is substantially similar to the EMS Agency's ePCR and the response information must be entered into the EMS Agency's ePCR software by the responding Medics and submitted to the Department within 24 hours of the resolution of the software or hardware failure.

(i) In the event the EMS Agency's software and/or hardware failure extends for longer than 7 calendar days, the EMS Agency shall immediately use the Department's ePCR software for direct entry of ePCRs by the Medics and continue using it until the EMS Agency's software and/or hardware failure is completely resolved.

4. In the event an EMS Agency's ePCR vendor is unable to submit the EMS Agency's ePCRs to the Department in compliance with this rule, whether as

a result of a software failure, hardware failure, validation rule(s) failure, or mis-configuration of the ePCR software, the EMS Agency must submit a ePCR to the receiving facility in printed or electronic form, and the response information must be submitted to the Department within 24 hours of the resolution of the software or hardware failure.

(i) In the event the EMS Agency's ePCR vendor is unable to transmit ePCRs to the Department for longer than 7 calendar days, the EMS Agency shall immediately use the Department's ePCR software for direct entry of ePCRs by the Medics and continue using it until the EMS Agency's ePCR vendor is able to transmit ePCRs for the EMS Agency in compliance with this rule.

5. All ePCR software or hardware failures must be reported to the Department within 12 hours of the failure and must be documented by the EMS Agency in a log that shall be made available for inspection by the Department immediately upon request.

6. The Department shall be authorized to inspect the ePCR software system of the EMS Agency to ensure compliance with this rule.

(c) EMS Agency crew members of the vehicle that transports a patient to an acute care facility, hospital, or any other facility that requests a Patient Care Report (PCR), shall deliver a PCR to the receiving facility prior to departing the facility. If the EMS Agency is unable to deliver a complete PCR to the facility electronically or in printed format prior to the departure of the transporting crew from the facility, then the primary patient caregiver of the transporting vehicle shall complete and deliver to the facility a written or printed abbreviated PCR that includes at a minimum, when applicable, the following data elements related to the current incident:

1. patient first name, last name, gender, and date of birth;

2. name of the EMS Agency and names of the crew members that transported the patient;

3. date and time when the call was received;

4. date and time when the transporting EMS Agency crew arrived on scene, left the scene and arrived at the destination;

5. date and time when the patient was injured, last known to be well, and had a return of spontaneous circulation;

6. date and time of first medical contact;

7. name of any first responder agency that cared for or made contact with the patient;

8. patient history, chief complaint, exam findings, and any treatments provided;

9. transporting EMS Agency incident number; and

10. any other information available to the EMS Agency that is necessary for the continued care of the patient at the receiving facility.

(4) Personnel Roster

(a) EMS Agencies shall submit rosters to the Department of all drivers and all licensed Medics, Nurses, physician assistants, physicians, and all other licensed healthcare workers employed by, volunteering for, or contracted by the EMS Agency. Rosters shall be submitted on forms specified by the Department with a minimum set of data elements specified by the Department, in compliance with the following:

1. EMS Agencies shall submit additions to their roster of any driver (excluding helicopter pilots), Medic, Nurse, physician assistant, physician, and all other licensed healthcare personnel prior to that person being permitted to staff an Air Ambulance, Ground Ambulance, Neonatal Transport Vehicle or Medical First Responder Vehicle; and

2. EMS Agencies shall submit deletions or modifications to their roster within 96 hours of the employment status change.

(5) Each EMS Agency shall notify the Department in a manner and on forms specified by the Department within twenty-four hours of:

(a) The receipt of a report or other information suggesting that a Medic, EMS Instructor, or EMS Instructor/Coordinator has:

1. Provided services while under the influence of drugs or alcohol;

2. Been arrested or indicted for, charged with, or convicted of any felony, crime of violence, or crime of moral turpitude;

3. Violated the laws of Georgia, another state or territory, or the United States. This shall not include violations which involve minor traffic offenses; or

4. Violated any Department rule or regulation, Scope of Practice, or any of the Department's policies governing EMS in Georgia.

(b) The violation of any Department approved Regional Ambulance Zoning Plan by any EMS Agency or Medic; and

(c) The theft of any Air Ambulance, Ground Ambulance, Neonatal Transport Vehicle, or Medical First Responder Vehicle registered to the EMS Agency.

Cite as Ga. Comp. R. & Regs. R. 511-9-2-.14
Authority: O.C.G.A. §§ 31-2A-3, 31-2A-6, 31-11-1 to 31-11-5, 31-11-9, 31-11-34, 31-11-35, 31-11-50, 31-11-51, 31-11-52, 31-11-53.1, 31-11-56 to 31-11-58, 31-11-58.1.
History. Original Rule entitled "Reciprocity of Emergency Medical Services Personnel" adopted. F. December 14, 2011; eff. January 3, 2012.
Note: Correction of non-substantive typographical error in History, original Rule title "Licensure of Emergency Medical Services Personnel" corrected to "Reciprocity of Emergency Medical Services Personnel." Effective May 17, 2016.
Repealed: F. Apr. 27, 2016; eff. May 17, 2016.
Adopted: New Rule entitled "Mandatory Reporting Requirements for EMS Agencies and Medics." F. Sep. 29, 2021; eff. Oct. 27, 2021, as specified by the Agency.

Rule 511-9-2-.15. General Provisions for Emergency Medical Services Personnel, EMS Instructors, and EMS Instructor/Coordinators.

(1) Emergency Medical Services Personnel shall at all times while on duty wear visible identification, to include name, company name and license level and may include the State EMS patch or embroidered facsimile, along with license level rocker. Patches of other licensing agencies are not an acceptable substitute.

(2) Emergency Medical Services Personnel shall at all times while on duty have a government issued photo identification on their person.

(3) Emergency Medical Services Personnel, EMS Instructors and EMS Instructor/Coordinators shall notify the Department in a manner and on forms specified by the Department within ten (10) days of any change in their name, email address, home address, mailing address, or phone number.

(4) All persons operating any vehicle registered to an EMS Agency shall possess a valid and unrestricted driver's license which permits the person to drive and operate the respective vehicle in compliance with all federal, state and local laws, rules and regulations.

Cite as Ga. Comp. R. & Regs. R. 511-9-2-.15
Authority: O.C.G.A. §§ 31-2A-3, 31-2A-6, 31-11-5, 31-11-51 to 31-11-61.
History. Original Rule entitled "General Provisions for Emergency Medical Technicians" adopted. F. December 14, 2011; eff. January 3, 2012.
Amended: New title "General Provisions for Emergency Medical Services Personnel, EMS Instructors, and EMS Instructor/Coordinators." F. Sep. 29, 2021; eff. Oct. 27, 2021, as specified by the Agency.

Rule 511-9-2-.16. Standards for Emergency Medical Services Education.

(1) EMS Initial Education.

(a) No EMS Agency, fire department, hospital, clinic, medical center, educational institution, or other entity shall hold itself out as a designated or approved EMS Initial Education Program at the EMR, EMT, AEMT, or Paramedic level without holding current designation by the Department as an EMS Initial Education Program for the respective level(s) of EMS initial education.

(b) Designation of EMS Initial Education Programs.

1. Any EMS Agency, fire department, hospital, clinic, medical center, educational institution, or other entity seeking designation as an EMS Initial Education Program at the EMR, EMT, AEMT, and/or Paramedic levels must submit an application to the Department in a manner and on forms as determined by the Department.

2. An application for designation as an EMS Initial Education Program must include a statement from an authorized agent of the Program's Sponsor attesting that the Sponsor accepts responsibility for the operation of the Program.

3. The Department's review of applications for designation and re-designation as an EMS Initial Education Program may include an on-site inspection of the program.

4. All EMS Initial Education Programs, including individual courses, are subject to periodic monitoring and announced or unannounced site visits by the Department.

5. All EMS Initial Education Programs must maintain satisfactory records for student admission, advisement, counseling, and evaluation. Grades and credits for courses must be recorded on the student transcript and permanently maintained by the Sponsor in a safe and accessible location. All EMS Initial Education Program records are subject to review by the Department at any time.

(c) EMS Initial Education Program Designation Criteria. Applicants for designation as an EMS Initial Education Program shall meet Department-specified standards that address, at a minimum, the following criteria:

1. Program sponsorship;

2. Program direction and administration;

3. Medical direction;

4. Instructional personnel;

5. Financial resources;

6. Physical resources, including classroom and laboratory facilities, equipment and supplies, and learning resources;

7. Admission requirements for all levels of EMS initial education courses offered by the Program;

8. Clinical and field internship resources;

9. Academic and administrative policies, procedures, and records retention requirements;

10. Program outcomes and evaluation;

11. Curriculum; and

12. Delivery of instruction by distance learning technology.

(d) Data Reporting Requirements and Course Notifications for EMS Initial Education Programs. Each designated EMS Initial Education Program shall:

1. Notify the Department of each EMS initial education course that it intends to offer, in a time frame and on forms specified by the Department.

2. Report specified data elements to the Department regarding each EMS initial education course offered, in a time frame, format, and frequency specified by the Department. All such data reported to the Department shall be accurate and factual.

3. Notify the Department of any substantive changes to the EMS Initial Education Program, as specified by the Department, in a time frame and on forms specified by the Department.

4. Provide the Department with full access to all data from its student clinical tracking system and its learning management system.

5. Notify the Department within twenty-four hours of receipt of a report or other information suggesting that a program instructor, preceptor, student, or field clinical/internship site has:

   (i) Provided services while under the influence of drugs or alcohol;

(ii) Been arrested or indicted for, charged with, or convicted of any felony, crime of violence, or crime of moral turpitude; or

(iii) Violated the laws or rules governing EMS in Georgia or the Department's policies related to EMS Initial Education Programs.

(e) The Department may suspend, revoke, or place on probation a designation as an EMS Initial Education Program, after providing written notice to the Program's Sponsor, if the Department determines that the Program is not in compliance with the requirements or criteria of these rules or applicable statutes or policies. The Department shall provide an administrative hearing on the action to suspend or revoke the Program's designation if the Sponsor makes a written request for a hearing. Such written request must be delivered to and received by the Department no later than twenty days after the Sponsor receives notice of the action. If a timely request for a hearing is not received, the action will become effective twenty days after the Sponsor's receipt of the notice. In lieu of suspending or revoking a Program's EMS Initial Education Program designation, the Department may re-designate the Program at another level of EMS Initial Education Program if it is determined that the Program does not meet the criteria for its current level(s) of designation.

(2) EMS Continuing Education.

(a) No EMS Agency, fire department, hospital, clinic, medical center, educational institution, other entity or person shall hold itself/themselves out as offering or teaching an approved EMS continuing education course unless the course has been approved by the Department or accredited by the Commission on Accreditation for Prehospital Continuing Education (CAPCE).

(b) Approval of EMS Continuing Education Courses.

1. All requests for Department approval of EMS continuing education courses must be submitted to the Department in a time frame and on forms specified by the Department.

2. EMS continuing education courses shall consist of educational activities designed to promote and enrich knowledge, improve skills, and develop attitudes for the enhancement of professional practice, thus improving the quality of Emergency Medical Services provided to the public.

3. All EMS continuing education courses are subject to periodic monitoring and announced or unannounced site visits by the Department. EMS continuing education courses that are delivered through distance education are subject to review and audit by the Department at any time.

4. All EMS continuing education courses must comply with course standards specified by the Department.

(c) Data reporting requirements

1. Department-approved EMS continuing education courses shall be assigned an approval number by the Department.

2. All providers of approved EMS continuing education courses shall issue a certificate or letter of completion to each student who completes the course. The certificate or letter must include information specified by the Department regarding the completion of the course.

3. If the provider of an approved EMS continuing education course is a Georgia licensed EMS Agency or designated EMS Initial Education Program, the provider shall submit a roster of the students who completed the course to the Department in a time frame and on forms specified by the Department.

(d) The Department's approval of an EMS continuing education course is contingent upon the course being taught according to the approved curriculum and in line with current standards and may be rescinded at any time. No course credit shall be given to attendees of a course for which the Department has rescinded its approval or to persons who have not attended and completed the continuing education course.

(e) Providers of Department or CAPCE approved EMS continuing education shall not issue a certificate of credit/completion for EMS continuing education hours to any person without the person meeting the EMS continuing education completion requirements as specified by the Department for the respective EMS continuing education course.

Cite as Ga. Comp. R. & Regs. R. 511-9-2-.16
Authority: O.C.G.A. §§ 31-2A-6, 31-11-5, 31-11-51 through 31-11-61.
History. Original Rule entitled "Standards for Emergency Medical Services Courses" adopted. F. December 14, 2011; eff. January 3, 2012.
Amended: New title "Standards for Training." F. Apr. 2, 2015; eff. Apr. 22, 2015.
Amended: F. Apr. 27, 2016; eff. May 17, 2016.
Amended: New title "Standards for Emergency Medical Services Education." F. Oct. 20, 2020; eff. Nov. 18, 2020, as specified by the Agency.

Rule 511-9-2-.17. Standards for Emergency Medical Service Instructors and Instructor/Coordinators.

(1) Licensure of EMS Instructors and EMS Instructor/Coordinators.

(a) No individual shall hold himself or herself out as an EMS Instructor unless the individual holds an active EMS Instructor license issued by the Department.

(b) No individual shall hold himself or herself out as an EMS Instructor/Coordinator at any level unless the individual holds an active EMS Instructor/Coordinator license issued by the Department.

(c) An application for licensure as an EMS Instructor or EMS Instructor/Coordinator shall be submitted on the form specified by the Department and shall include adequate demographic information and documentation that the applicant meets all licensure requirements set forth in this rule.

(d) Once issued, a license shall be valid for a period of two years or until the biennial renewal date established by the Department.

(e) The Department may deny an application for licensure as an EMS Instructor or EMS Instructor/Coordinator, or revoke or otherwise sanction a license, after notice and an opportunity for a hearing, upon any of the grounds set forth in Rule 511-9-2-.18.

(2) Eligibility for Licensure as an EMS Instructor or EMS Instructor/Coordinator.

(a) EMS Instructor. All applicants for initial licensure as an EMS Instructor must meet the following requirements:

1. Current CPR Certification that is maintained throughout the Instructor license period.

2. Successful completion of a Department-recognized instructional techniques course, Department-recognized EMS instructional preparation curriculum, or Department-recognized equivalent not more than three (3) years prior to the application.

3. Current Georgia healthcare license that is maintained throughout the instructor license period in a field specified by the Department, together with documentation of a minimum length of continuous licensure in Georgia or another state or territory at an approved healthcare license level.

(b) EMS Instructor/Coordinator. All applicants for initial licensure as an EMS Instructor/Coordinator must meet the following requirements:

1. Minimum Requirements for all Instructor/Coordinator Levels.

(i) Current CPR Certification that is maintained throughout the Instructor/Coordinator license period.

(ii) Successful completion of a Department-recognized EMS instructional preparation curriculum or Department-recognized equivalent not more than three (3) years prior to the application.

(iii) Current Georgia healthcare license that is maintained throughout the instructor/coordinator license period in a field specified by the Department that is at or above the Instructor/Coordinator level, together with documentation of a minimum length of continuous licensure and active clinical practice in Georgia or another state or territory at that healthcare license level.

(iv) Documentation of competency in national EMS clinical standards as evidenced by:

(I) For an applicant who is licensed by the Department, current certification from the National Registry of Emergency Medical Technicians (NREMT) which is maintained throughout the Instructor/Coordinator license period, as follows:

I. An applicant licensed by the Department as an EMT, AEMT, or Paramedic shall hold NREMT certification at the applicant's Medic license level;

II. An applicant licensed by the Department as an EMT-I shall hold NREMT certification at the EMT level; and

III. An applicant licensed by the Department as a Cardiac Technician shall hold NREMT certification at the AEMT level; or

(II) For an applicant who is licensed by a Georgia licensing authority other than the Department, successful completion of the NREMT assessment exam at or above the Instructor/Coordinator level within a time frame specified by the Department.

(v) Documentation of at least forty (40) hours of active teaching/internship in a Department-approved EMS Initial Education Program that meets or exceeds objectives specified by the Department.

2. Additional Requirements for EMS Instructor/Coordinator (Paramedic).

(i) Current ACLS Certification that is maintained throughout the Instructor/Coordinator license period.

(ii) An Associate Degree or higher from an academic institution that is accredited by an institutional accrediting agency recognized by the United States Department of Education. The degree may be in any major.

(3) License Renewal for EMS Instructors and EMS Instructor/Coordinators.

(a) Licensed EMS Instructors and EMS Instructor/Coordinators may renew their licenses biennially by submitting a renewal application on or before the expiration date. A renewal application shall be submitted on the form specified by the Department and shall include adequate documentation of the licensee's compliance with the continuing education and active teaching requirements set forth below. The Department may, in its discretion, specify mandatory continuing education topics during the renewal cycle.

1. EMS Instructors must submit adequate documentation of the following for each renewal cycle:

(i) Completion of twelve (12) hours of Department-approved instructor continuing education during the renewal cycle in instructional topics, six (6) of which must be approved only for instructors. Continuing education courses/hours applied towards the continuing education requirements for renewal of a Georgia healthcare provider license may not be applied towards the continuing education requirements for renewal of an EMS Instructor license.

(ii) Completion of twenty (20) hours of active teaching during the renewal cycle in Department-approved continuing education courses or EMS Initial Education Courses offered by designated EMS Initial Education Programs.

2. EMS Instructors with Paramedic Endorsement must submit adequate documentation of the following for each renewal cycle:

(i) Completion of twenty-four (24) hours of Department-approved instructor continuing education during the renewal cycle in instructional topics, twelve (12) of which must be approved only for instructors. Continuing education courses/hours applied towards the continuing education requirements for renewal of a Georgia healthcare provider license may not be applied towards the

continuing education requirements for renewal of an EMS Instructor with Paramedic Endorsement license.

(ii) Completion of forty (40) hours of active teaching during the renewal cycle in EMS Initial Education Courses offered by designated EMS Initial Education Programs, twenty (20) of which must be taught at the Paramedic level.

3. EMS Instructor/Coordinators must submit adequate documentation of the following for each renewal cycle:

(i) Completion of twenty-four (24) hours of Department-approved instructor continuing education during the renewal cycle in instructional topics, twelve (12) of which must be approved only for instructors. Continuing education courses/hours applied towards the continuing education requirements for renewal of a Georgia healthcare provider license may not be applied towards the continuing education requirements for renewal of an EMS Instructor/Coordinator license.

(ii) Completion of forty (40) hours of active teaching during the renewal cycle in EMS Initial Education Courses offered by designated EMS Initial Education Programs, twenty (20) of which must be taught at or above the Instructor/Coordinator level.

(b) An EMS Instructor or EMS Instructor/Coordinator license that is not renewed prior to the expiration date shall be placed in lapsed status. A lapsed license may be renewed during a six-month late renewal period immediately following the expiration date, provided that all requirements for license renewal are met.

(c) An EMS Instructor or EMS Instructor/Coordinator license that is not renewed prior to the end of the late renewal period shall be expired and not eligible for renewal. To regain licensure, the individual must submit a new application to the Department and meet all current eligibility requirements for licensure as an EMS Instructor or EMS Instructor/Coordinator.

(4) License Fees for EMS Instructors and EMS Instructor/Coordinators.

(a) All applications for initial licensure as an EMS Instructor or EMS Instructor/Coordinator or for renewal of an EMS Instructor or EMS Instructor/Coordinator license submitted on or after July 1, 2021, shall be accompanied by a fee payable to the Department in an amount and form determined by the Department.

(b) All applications for late renewal of an EMS Instructor or EMS Instructor/Coordinator license submitted on or after January 1, 2023, shall be accompanied by the applicable renewal fee, plus a late renewal penalty fee in an amount equal to the renewal fee, payable to the Department in a form determined by the Department.

(5) Clinical Preceptors.

(a) Clinical preceptors may precept Paramedic, AEMT, EMT, and EMR students at or below the preceptor's provider license level.

(b) Clinical preceptors must be approved by the Program Director of the EMS Initial Education Program and the Program's EMS Medical Director after successfully completing a clinical preceptor training course approved by the Department.

(c) The course coordinator must maintain student clinical records involving clinical preceptors for a time period specified in the Department's published record retention schedule for EMS Initial Education Programs.

(6) Any currently licensed EMS Instructor or EMS Instructor/Coordinator may voluntarily surrender their EMS Instructor or EMS Instructor/Coordinator license by notifying the Department in a manner and on forms specified by the Department. Once processed by the Department, surrenders are not reversible, and the individual would need to complete the current Department-specified application process and meet all licensing requirements to obtain a new EMS Instructor or EMS Instructor/Coordinator license.

(7) Upon request, the Department shall be authorized to place an EMS Instructor or EMS Instructor/Coordinator license in retired status after which the individual will be permitted to continue to use the former licensure level title and number with "(Ret.)" after it. An individual in retired status will not be licensed to perform the duties of an EMS Instructor or EMS Instructor/Coordinator as defined in these rules. Applications for license retirement shall be submitted in a manner and on forms specified by the Department and must be submitted by the Licensee themselves. Once processed by the Department, retirements are not reversible, and the individual would need to complete the current Department-specified application process and meet all licensing requirements to obtain a new EMS Instructor or EMS Instructor/Coordinator license. Eligibility requirements for retirement of an EMS Instructor or EMS Instructor/Coordinator license are as follows:

(a) The individual must be currently licensed as a Georgia EMS Instructor or EMS Instructor/Coordinator, and the respective license must be in Good Standing at the time of application; and

(b) The individual must have a minimum of 15 years of continuous uninterrupted licensure as a Georgia EMS Instructor or EMS Instructor/Coordinator, inclusive of the date of application.

(8) Upon request from the next of kin to place an EMS Instructor or EMS Instructor/Coordinator license in deceased status and obtain a certificate of active service for an individual who dies while currently licensed in Good Standing as a Georgia EMS Instructor or EMS Instructor/Coordinator, the Department shall be authorized to place the respective license in deceased status and provide a certificate of active service to the next of kin. The request shall be accompanied by a certified death certificate or other documents recognized by the Department.

(9) Downgrades of Instructor and Instructor/Coordinator Licenses. Currently licensed EMS Instructors with Paramedic Endorsement and EMS Instructor/Coordinators in Good Standing may voluntarily request the Department to downgrade their Instructor or Instructor/Coordinator license. The request shall be made to the Department in a manner and on forms specified by the Department and shall indicate the requested new level of license. Once processed by the Department, downgrades are not reversible, and the individual would need to complete the current Department-specified application process to obtain a higher level of Instructor or Instructor/Coordinator license.

(a) Permitted downgrades are as follows:

1. Currently licensed EMS Instructors with Paramedic Endorsement and EMS Instructor/Coordinators (Paramedic) in Good Standing will be permitted to request a downgrade to the EMS Instructor, EMS Instructor/Coordinator (AEMT), or EMS Instructor/Coordinator (EMT) levels.

2. Currently licensed EMS Instructor/Coordinators (AEMT) in Good Standing will be permitted to request a downgrade to the EMS Instructor, or EMS Instructor/Coordinator (EMT) levels.

3. Currently licensed EMS Instructor/Coordinators (EMT) in Good Standing will be permitted to request a downgrade to the EMS Instructor level.

(b) Applications for downgrade must be accompanied by the following:

1. An application fee, as described in paragraph (4) of this rule.

Cite as Ga. Comp. R. & Regs. R. 511-9-2-.17
Authority: O.C.G.A. §§ 31-2A-3, 31-2A-6, 31-11-5, 31-11-51 to 31-11-61.
History. Original Rule entitled "Standards for Emergency Medical Service Instructors" adopted. F. December 14, 2011; eff. January 3, 2012.
Amended: F. Apr. 27, 2016; eff. May 17, 2016.
Amended: New title "Standards for Emergency Medical Service Instructors and Instructor/Coordinators." F. Oct. 20, 2020; eff. Nov. 18, 2020, as specified by the Agency.
Amended: F. Sep. 29, 2021; eff. Oct. 27, 2021, as specified by the Agency.

Rule 511-9-2-.18. Standards of Conduct for Licensees.

In order to protect the public and ensure the integrity of the emergency medical response system, all persons licensed by the Department pursuant to Chapter 31-11, all owners and officers of entities licensed pursuant to Chapter 31-11, and all applicants for a license pursuant to Chapter 31-11 (hereinafter licensees) shall at all times meet the following standards of conduct:

(1) A licensee shall comply at all times with the provisions of Chapter 31-11 and the Rules and Regulations of the Department.

(2) A licensee shall not obtain a license by fraud, forgery, deception, misrepresentation, or omission of a material fact.

(3) A licensee shall not present a check to the Department for which there are insufficient funds in the account.

(4) A licensee shall not tamper with, alter, or change any license issued by the Department.

(5) A licensee shall fully cooperate with the Department and its agents during the course of any investigation or inspection, and provide true information upon request.

(6) A licensee shall take no action in any other jurisdiction that would result in a fine, suspension, or revocation of any license similar to that issued to the licensee pursuant to Chapter 31-11.

(7) A licensee shall not advertise its services in a false or misleading manner.

(8) A licensee shall not provide any type or level of service that is not authorized by its license or by law.

(9) A licensee shall not provide services while its license is suspended, or revoked, inactive, or has lapsed for failure to renew, whether personally or through employees, agents, or volunteers.

(10) A licensee shall correct as soon as practicable all violations and deficiencies found during a Department inspection.

(11) A licensee's equipment shall be clean and in proper operating condition at all times.

(12) A licensee shall not falsify any record, patient care report, other report or record, or any other document which the licensee is required to maintain under state or federal law or Department regulations or policies.

(13) A licensee shall not employ fraud or misrepresentation to obtain a fee or any reimbursement in the course of Emergency Medical Services or other services under its licensure.

(14) A licensee shall report to the Department within ten days the bringing of any criminal charges against the licensee, whether by arrest warrant, information, accusation, or indictment. This subsection shall not apply to minor traffic offenses.

(15) A licensee shall, upon request by the Department, submit copies or permit inspection of any document, which the licensee is required to maintain under state or federal law or Department regulations.

(16) A licensee shall not provide services while under the influence of drugs or alcohol, nor permit any employee or co-worker to do so.

(17) A licensee shall use no less than the requisite number of licensed individuals applicable to its license.

(18) A licensee shall act with due regard for the safety of patients and the public in the operation of an emergency vehicle, and shall not use vehicle warning devices unnecessarily or in a manner that endangers the safety of the patient or the public.

(19) A licensee shall not aid or abet the unlicensed practice of emergency medical care.

(20) A licensee shall not accept anything of value in return for a patient referral.

(21) A licensee shall abide by all Regional Ambulance Zoning Plans.

(22) A licensee shall take no action that would jeopardize the health or safety of a patient, including without limitation the abandonment or mistreatment of a patient.

(23) A licensee shall pay all administrative fines in full within thirty days.

(24) A licensee shall display proper identification at all times while on duty, including the Georgia level of licensure.

(25) A licensee shall maintain the confidentiality of all patient records and information and shall not disclose any confidential information or knowledge concerning a patient except where required or allowed by law.

(26) A licensee shall take no action that may result in a criminal conviction on a felony charge, a crime of moral turpitude, or the crime of driving under the influence or possession of a controlled substance.

(27) An EMS Instructor or EMS Instructor/Coordinator licensee shall maintain student records as required by the Department, and shall meet all license renewal requirements.

(28) An EMS Instructor/Coordinator licensee serving as the Program Director of a designated EMS Initial Education Program shall ensure that all state, national, and applicable accreditation requirements are met for each student before validating that the student has

completed the course and/or is clear to test the National Registry exam for the respective level of initial education.

(29) A licensee shall not discriminate on the basis of national origin, race, color, creed, religion, gender, sexual orientation, age, economic status, or physical or mental ability in providing services.

(30) A licensee shall not violate any lawful order of the Department.

(31) A licensee shall not violate any statute, rule or regulation, state or federal, which pertains to Emergency Medical Services.

(32) A licensee shall not violate the security of any exam or exam material for purposes of obtaining or maintaining an EMS license by any means including but not limited to removing any exam materials from an examination area, the unauthorized possession of exam materials, the unauthorized reproduction of exam materials, impersonating an examinee, or having another person take an exam on behalf of a licensee.

(33) An EMS Instructor or EMS Instructor/Coordinator serving as the Program Director, Course Coordinator, Lead Instructor, Clinical Coordinator, or other instructional staff in a EMS Initial Education course shall ensure that all data related to any student, instructor or preceptor that is submitted to or required by the Department is accurate and factual and complies with all state, national, and applicable accreditation requirements.

(34) A licensee shall not issue a certificate of credit/completion for EMS continuing education hours to any person without the person meeting the EMS continuing education completion requirements as specified by the Department for the respective EMS continuing education course.

(35) A licensee shall take no action that would jeopardize the health, safety, or wellbeing of a student, including without limitation the abandonment or mistreatment of a student.

(36) A licensee shall at no time violate, exceed, or disregard the Department specified Scope of Practice for their respective license level(s).

(37) A licensee shall not make false or misleading statements in any oral, written, or electronic report regarding the provision of emergency medical care to any patient.

(38) A licensee shall not destroy or cause to be destroyed any patient care report.

(39) A licensee shall not fail to respond to a call while on duty and shall not leave their duty assignment without the proper approval.

(40) A licensee shall not delegate EMS functions to a person who lacks the education, training, experience, knowledge, or licensure to provide appropriate level of care for the patient.

(41) A licensee shall not falsify, misrepresent, or alter clinical, field and/or internship documents for EMS students.

(42) A licensee shall not behave in a disruptive manner toward other EMS personnel, law enforcement, firefighters, hospital personnel, other medical personnel, patients, family members or others, that interferes with patient care or could be reasonably expected to adversely impact the quality of care rendered to a patient.

(43) A licensee shall not fail to protect and/or advocate for patients/clients/students and/or the public from unnecessary risk of harm from another EMS personnel.

(44) A licensee shall not misappropriate medications, supplies, equipment, personal items, or money belonging to the patient, employer or any other person or entity.

(45) A licensee shall not misrepresent any level of certification or licensure.

Cite as Ga. Comp. R. & Regs. R. 511-9-2-.18
Authority: O.C.G.A. §§ 31-2A-3, 31-2A-6, 31-11-5, 31-11-6, 31-11-9, 31-11-30, 31-11-36, 31-11-56, 31-11-57, 50-13-18.
History. Original Rule entitled "Standards of Conduct for Licensees" adopted. F. December 14, 2011; eff. January 3, 2012.
Amended: F. Apr. 27, 2016; eff. May 17, 2016.
Amended: F. Oct. 20, 2020; eff. Nov. 18, 2020, as specified by the Agency.
Amended: F. Sep. 29, 2021; eff. Oct. 27, 2021, as specified by the Agency.

Rule 511-9-2-.19. Disciplinary Actions Against Licensees.

(1) The Department shall revoke the license of any individual or entity licensed under Chapter 31-11 for failure to comply with Chapter 31-11, the regulations of the Department, or approved Regional Ambulance Zoning Plans. The term "license" as used in this regulation includes certificates issued to EMS personnel or instructors pursuant to Article 3 of Chapter 31-11.

(2) The Department may, in its discretion, impose a lesser sanction where the circumstances of the violation do not merit revocation of the license, including probation on specified terms or suspension.

(3) In addition to revocation, suspension, or probation of a license, the Department in its discretion may impose a fine not to exceed a total of $25,000 for each violation or up to $1,000 per day for each violation of Chapter 31-11, the rules and regulations of the Department, or approved Regional Ambulance Zoning Plans.

(4) Procedure.

(a) The Department shall give written notice of any disciplinary action taken pursuant to this regulation by certified mail or statutory overnight delivery to the licensee's

last known address, unless the licensee provides a different address to which notices may be sent. The notice shall set forth the individual facts or conduct, which warrant the disciplinary action.

(b) The Department shall provide an administrative hearing on the disciplinary action if the licensee makes a written request for a hearing. Such written request must be actually delivered to and received by the Director of the Georgia Office of EMS and Trauma not later than twenty days after the licensee receives the notice of disciplinary action.

(c) The licensee shall have at least twenty days' prior notice of the time and place of the hearing.

(5) Effective date of disciplinary action.

(a) All disciplinary actions by the Department are effective twenty days after the licensee's receipt of the notice, unless the licensee makes a timely request for a hearing. In that event, the action shall become effective upon the agency's final decision.

(b) Upon a written finding set forth in the notice of disciplinary action that the public safety, heath, and welfare imperatively require emergency action, the suspension of the license shall be effective immediately upon issuance of the notice, and a hearing promptly scheduled to consider final revocation of the license.

(6) Upon request by the licensee for exculpatory, favorable, or arguably favorable information relative to pending allegations involving disciplinary action, the Department shall either furnish such information, indicate that no such information exists, or provide such information to the hearing officer for in camera inspection pursuant to O.C.G.A. § 50-13-18(d)(2).

Cite as Ga. Comp. R. & Regs. R. 511-9-2-.19
Authority: O.C.G.A. §§ 31-2-8(c)(6); 31-2A-3, 31-2A-6, 31-11-5, 31-11-6, 31-11-9, 31-11-30, 31-11-36, 31-11-56, 31-11-57, 50-13-18.
History. Original Rule entitled "Disciplinary Actions Against Licensees" adopted. F. December 14, 2011; eff. January 3, 2012.
Amended: F. Apr. 27, 2016; eff. May 17, 2016.
Amended: F. Sep. 29, 2021; eff. Oct. 27, 2021, as specified by the Agency.